Vol. I

no fold

TRANSCRIPT OF RECORD

Supreme Court of the United States

OCTOBER TERM, 1934

No. 254

PARAMOUNT PUBLIX CORPORATION,
PETITIONER,

vs.

AMERICAN TRI-ERGON CORPORATION

ON WRIT OF CERTIORARI TO THE UNITED STATES CIRCUIT COURT OF APPEALS FOR THE SECOND CIRCUIT

PETITION FOR CERTIORARI FILED AUGUST 6, 1934.

CERTIORARI GRANTED NOVEMBER 5, 1934.

INDEX.

PAGE

Bill of Complaint 1
Answer 10
Order dated November 18, 1932, Amending Answer 16
Order dated November 23, 1932, Amending Answer 17
Narrative and Condensed Statement of the Testimony 18
Stipulation and Order Approving Condensed Statement of the Testimony 466

PLAINTIFF'S WITNESSES.

Louis B. Hoffman:
Direct 30
Cross 43
Recalled:
Cross 124

William C. Ballard, Jr.:
Direct 51
Cross 69
Re-direct 95
Re-cross 101

John M. Joy:
Direct 104
Cross 110
Re-direct 123

DEFENDANT'S WITNESSES.

Henry Nonnenbacher:
Direct 128
Cross 133

PAGE

Lloyd A. Jones:
Direct 134
Cross 194
Re-direct 302
Recalled:
Direct 340
Cross 341
Recalled:
Direct 386
Cross 386

Edward C. Wente:
Direct 307
Recalled:
Direct 343
Cross 344
Re-direct 375
Re-cross 379

Whitford Drake:
Direct 327
Cross 331
Re-direct 339
Re-cross 339

PLAINTIFF'S REBUTTAL WITNESSES.

William C. Ballard, Jr.:
Direct 389
Resumed:
Direct 433
Cross 447
Re-direct 454

Courtland Smith:
Direct 410
Cross 427
Re-direct 432

Plaintiff's Exhibits.	Offd. Page	Ptd. Page
1—Vogt patent No. 1,825,598 in suit	18	467
2—Certified copy of disclaimer with respect to Claims 6 and 7 of the patent in suit	19	472
3—Certified copy of File Wrapper and contents of application for patent in suit	19	475
4—Certified copy of decision of Examiners of Interferences in the Interference No. 53,103	19	567
4-A—Certified copy of decision of the Board of Appeals, Patent Office, in same interference	19	571
5—DeForest patent involved in said interference, No. 1,489,314	20	876
6—Original German application as filed, corresponding to the application for patent in suit; being German application V16,431 VI-57,a2	20	578
Translation		581
7—Certified copy of assignment from Vogt, *et al.*, inventors of the patent in suit, to Tri-Ergon, Ltd., dated June 3, 1924	20	
8—Photostatic copy of agreement between Tri-Ergon, A.G. and Wm. Fox, dated September 4, 1928	20	
9—Photostat copy of agreement between Tri-Ergon, A.G. and Tri-Ergon Musik, dated November 8 and 15, 1926, and translation thereof	20	

	Offd. Page	Ptd. Page
10—Certified copy of an assignment from Tri-Ergon, A.G. to William Fox of certain patents, including the patent in suit	20	
11—Photostat copy of an assignment from Wm. Fox to American Tri-Ergon Corporation, of certain patents, including patent in suit	21	
12—Two combined statements (of Defendant's process) and stipulations, dated respectively November 17 and 26, 1932	21	
12-A—Strips of Defendant's film accompanying first statement	30	
13—Photostat copy of densitometer readings shown on sheet entitled "Density readings of sensitometered strips", referred to by witness Hoffmann	37	584
14—Photostat copy of gamma curve referred to by witness Hoffmann	37	585
15—Photostat copy of opacity curve referred to by witness Hoffmann	37	586
16—Work sheet from which Mr. Hoffmann figured out the reduced percentages of ingredients for two developers which he referred to ..	37	587
17—Picture strip referred to by witness Hoffmann as being developed in defendant's picture developer	38	
18—Piece of negative referred to by witness Hoffmann as developed in defendant's sound developer	38	
19—Two pictures on one sheet, lower one printed from Exhibit 18, upper one printed from Exhibit 17	39	

	Offd. Page	Ptd. Page
20—Strip of test film from which Mr. Hoffmann took the readings on Exhibit 13, readings marked sound developer	42	
21—Strip from which Mr. Hoffmann got data shown on Exhibit 13, marked picture developer	43	
22—Chart illustrating defendant's process	53	589
23—Second chart illustrating part of defendant's process	53	589
24—Photostatic copy of chart illustrating sound recording	56	590
25—Reis patent No. 1,473,976	62	591
26—French patent No. 448,757	62	924
27—British patent No. 157,433 of 1922 to Vogt	62	601
28—File wrapper of Dr. Wente's application	375	604
References cited in Wente application file	375	
28-A—Holst, No. 1,205,632		645
28-B—Tessler, No. 1,205,582		655
28-C—Hochstetter, No. 1,325,198		664
28-D—Jobke, No. 1,344,896		673
28-E—Tigerstedt, British, No. 100,748, 1919		679
28-F—Brown, *et al.*, No. 1,034,-192		683
28-G—Ulysse, No. 1,161,910		690
28-H—Dyer, *et al.*, No. 970,614		696
Greensfelder, No. 1,254,-684 (Def. Ex. G)		701
Vogt, *et al.*, British No. 178,442 (Def. Ex. N)		994
Bullis, No. 1,335,651 (Def. Ex. G)		714

	Offd. Page	Ptd. Page
29—Patent taken out by Mr. T. J. Engel and assigned to Western Electric Company, No. 1,654,926, issued January 3, 1928, on an application filed October 2, 1923 ...	375	722
30—Bullis patent No. 1,679,708	437	725
31—Craig patent No. 1,260,338	443	728
32—Certified copy of Vogt *et al.* German application as filed, No. V-14634, IX, 57a-2, filed April 2, 1919	455	738
Translation		744
33—Certified copy of File Wrapper and contents of Vogt *et al.*, now abandoned, U. S. application Serial No. 458,636, filed April 4, 1921	455	748
34—Certified copy of decision of State Superior Court, one of Berlin, in the case of Tonbild vs. Klangfilm, recording Vogt *et al.*, German patent No. 368,383	458	775
Translation		785
35—Photostat of article of H. B. Marvin, of the General Electric Co. in Transactions of S. M. P. E. for April, 1928, referred to in said German court decision	458	795
36—Photostatic copy of British patent to Bullis, No. 105,589, referred to in said decision	458	812
37—Series of letters between Mr. Schroeder and the American Telephone & Telegraph Company ...	459	822
38—Article in American Cinematographer as sent by the Schroeder letter of September 8, 1925, to American Telephone & Telegraph Company	459	842

Defendant's Exhibits.

	Offd. Page	Ptd. Page
A—Sections of the two original negatives of "The Music Master" released by Biograph Co., May 6, 1908 (Physical)	129	
B—Descriptive circular, dated May 6, 1908, for "The Music Master" sent to Biograph distributors ...	130	844
C—Composite positive print from the two negatives of Exhibit A (Physical)	132	
D—Four photomicrographs of 8000 cycle note on positive and negative emulsions developed in defendant's picture and sound formulae	157	
E—Two positive enlargements printed from the same strip of negative film and developed in defendant's picture and sound formulae	158	
F—Chart showing frequency characteristics of positive and negative emulsions	160	845
G—Binder entitled "Defendant's Book of Prior Patents"	169	

United States Patents.

Patentee		
Bendann *et al.*	No. 125,522 ..	846
Jenkins,	No. 606,993 ..	849
Walker,	No. 1,186,717 ..	852
Greensfelder,	No. 1,254,684 ..	701
Craig,	No. 1,260,337 ..	861
Messter,	No. 1,286,383 ..	873
Bullis,	No. 1,335,651 ..	714
DeForest,	No. 1,489,314 ..	876

BRITISH PATENTS.

		Offd. Page	Ptd. Page
Rossi,	No. 21,467, 1909		879
Rosenberg,	No. 23,620, 1911		883
Downing,	No. 6,727, 1913		896
Kindermann,	No. 18,163, 1913		900
Pedersen,	No. 115,942, 1918		905

GERMAN PATENTS.

Thornton,	No. 275,551, 1914		909
Translation	.....		913
Reimer,	No. 279,598, 1914		919
Translation	.....		921

FRENCH PATENT.

MacCarty,	No. 448,757, 1913		924
Translation	.....		929

H—French patent 532,750, to Vogt, *et al.*, relied upon under Section 4887 of the Revised Statutes 189 936
Translation 938

I—Certified copy of papers in DeForest v. Vogt Interference No. 53,103 (Physical) comprising:

1. Opinion of the U. S. Court of Customs and Patent Appeals, dated May 25, 1931;
2. Printed transcript of record;
3. Brief for DeForest;
4. Brief for Vogt, Massolle and Engl 193

	Offd. Page	Ptd. Page
J—Photostat of certified copy of the file wrapper and contents of De-Forest patent No. 1,489,314	193	942
K—Negatives from which the positive enlargements of Exhibit E were made (Physical)	301	
L—German patent No. 368,383 to Vogt, *et al.*, corresponding to patent in suit	305	960
Translation		961
M—Photostat of certified copy of file wrapper and contents of German patent No. 368,383	306	963
Translation		973
N—Certified copy of British Patent Office papers on British patent No. 178,442, corresponding to patent in suit, containing:		
1. Application as open to public inspection on April 15, 1922		983
2. Corresponding German application as filed in Germany		988
Translation		991
3. British patent No. 178,442, as issued		994
4. Assignment dated August 16, 1924, from Vogt, *et al.* to Tri-Ergon, A.G.	307	995
O—Diagram of Western Electric recording system	316	1000
P—Diagram of Western Electric reproducing system	326	1001
Q—Certified copy of file wrapper and contents of Craig patent No. 1,260,337	385	1002

	Offd. Page	Ptd. Page
Q-1—Haines British patent, No. 18,057 of 1906, referred to in Craig file wrapper, Exhibit Q	386	1074
R—Article by Hans Vogt in Film Kurier of February 6, 1932	461	1087
Translation		1089
S—Decision in Tonbild-Syndikat Aktien-Ges. vs. Klangfilm G.m.b.H.	462	1092
Translation		1140

	PAGE
Opinion, Campbell, D. J.	1173
Final Decree	1208
Stipulation as to Findings of Fact and Conclusions of Law	1210
Petition for Appeal	1211
Order Allowing Appeal and Supersedeas	1212
Stipulation as to Bond, etc.	1213
Assignment of Errors	1214
Note as to Citation	1216
Stipulation and Order as to Certain Exhibits	1217
Stipulated Praecipe	1218
Stipulation as to Argument	1221
Order Extending Time	1222
Stipulation as to Record	1223
Clerk's Certificate	1224
Proceedings in U. S. C. C. A., Second Circuit	1225
Opinion, Manton, J.	1225
Decree	1233
Petition for rehearing	1235
Defendants's Exhibit "O"—Drawing of Western Electric Recording System	1272
Order denying petition for rehearing	1273
Clerk's certificate	1273
Order allowing certiorari	1275

United States District Court

EASTERN DISTRICT OF NEW YORK. 1

AMERICAN TRI-ERGON CORPORATION, Plaintiff, vs. PARAMOUNT PUBLIX CORPORATION, Defendant.	In Equity No. On U. S. Letters Patent No. 1,825,598.

Bill of Complaint 2

(Filed Nov. 19, 1931.)

AMERICAN TRI-ERGON CORPORATION, the plaintiff above-named, brings this its bill of complaint, against the above-named defendant and alleges as follows:

1. (a) That the plaintiff, American Tri-Ergon Corporation, is a corporation organized and existing under the laws of the State of New York and is a citizen and an inhabitant of said state, having a place of business in the Borough of Manhattan, County and State of New York. 3

(b) Upon information and belief, that the defendant, Paramount Publix Corporation, is a corporation organized and existing under the laws of the State of New York and is a citizen and an inhabitant of said state, having a regular and established place of business in Long Island City, County of Queens and State of New York and within the Eastern District of New York; and that upon information and belief, said defendant, prior to the commencement of this suit and subsequent to the grant of the Letters Patent referred to hereinafter, and as hereinafter stated, has committed at its said regular and estab-

lished place of business within the Eastern District of New York and elsewhere in the United States, acts of infringement upon the rights of plaintiff under said Letters Patent referred to hereinafter.

2. That the jurisdiction of the Court depends upon the patent laws of the United States.

3. (a) Upon information and belief, that heretofore and before the 29th day of March, 1922,
5 Hans Vogt, then a resident of Berlin-Wilmersdorff, Germany, Joseph Massolle, then a resident of Berlin-Grunewald, Germany, and Josef Engl, then a resident of Berlin-Grunewald, Germany, all then being citizens of Germany, were the true, original, first and joint inventors of new and useful improvements in processes for producing combined sound and picture films not known or used by others in this country before their invention or discovery thereof, and not patented or described in any printed publication in this or any foreign country before their invention or
6 discovery thereof, or more than two years prior to their application for Letters Patent hereinafter mentioned, and not in public use or on sale in this country for more than two years prior to their said application for Letters Patent, and not patented or caused to be patented by them or their legal representatives or assigns in any foreign country on an application for foreign patent filed more than twelve months prior to the filing of their said application in this country and which had not been abandoned.

(b) Upon information and belief, that on or about the 29th day of March, 1922, said Hans Vogt, Joseph Massolle and Josef Engl made due

application for the granting of United States Letters Patent for their said invention, in writing to the Commissioner of Patents, and filed in the Patent Office a written description of the same, and paid the fees required by law, and fully and in all respects complied with all the necessary conditions and requirements of the statutes of the United States in such cases made and provided.

(c) On information and belief, that on or about the 3rd day of June, 1924, said Hans Vogt, 8
Joseph Massolle and Josef Engl jointly executed and delivered an assignment to Tri-Ergon, Limited (otherwise known as Tri-Ergon, A. G.), a corporation organized and existing under the laws of Switzerland and having its principal place of business at Zurich, Switzerland, said assignment conveying to said Tri-Ergon, Limited (otherwise known as Tri-Ergon, A. G.) all right, title and interest in and to the said United States patent application and the invention thereof, and all United States Letters Patent to be issued upon or for the same; and authorizing and 9
requesting the Commissioner of Patents to issue any United States patent granted upon or for said invention, to said Tri-Ergon, Limited (otherwise known as Tri-Ergon, A. G.), such assignment being duly recorded in the United States Patent Office on or about the 23rd day of June, 1924, in Liber Z-121, page 309 of Transfers of Patents.

(d) That said Tri-Ergon, Limited (otherwise known as Tri-Ergon, A. G.) being the owner of said United States patent application and the invention thereof as aforesaid, by an agreement and assignment in writing, executed and de-

livered on or about the 4th day of September, 1928, and by a subsequent formal written assignment for recording, executed and delivered on or about the 15th day of February, 1929, and recorded in the United States Patent Office on or about April 17, 1929, in Liber X-138, page 240 of Transfers of Patents, sold, assigned and transferred to William Fox, of Woodsburgh, Nassau County, New York, all right title and interest in and to said United States application
11 and the invention thereof and United States Letters Patent to be granted therefor, subject to the terms and conditions of said agreement of September 4, 1928.

(e) That said William Fox, being the owner of said United States patent application and the invention thereof as aforesaid, by an assignment in writing, executed and delivered on or about the 6th day of June, 1930, and recorded in the United States Patent Office on or about July 3, 1930, in Liber T-144, page 192 of Transfers of Patents, sold, assigned and transferred unto
12 plaintiff, American Tri-Ergon Corporation, subject to the terms and conditions of said agreement of September 4, 1928, all of the right, title and interest in and to said United States patent application and the invention thereof, which had been assigned to him as aforesaid.

(f) Upon information and belief, that after the filing of said patent application, due examination having been made as to the novelty and utility of said invention, and all of the requirements of the statutes then in force having been complied with, Letters Patent of the United States, No. 1,825,598, were on the 29th day of September, 1931, issued in due form of law to the plaintiff,

American Tri-Ergon Corporation, in the name of the United States of America under the seal of the Patent Office and signed by the Commissioner of Patents or his duly authorized assistant, granting unto said plaintiff, its successors and assigns, for the term of seventeen years, the exclusive right to make, use and vend the said invention throughout the United States and the territories thereof. 13

(g) That the plaintiff, ever since the grant of said Letters Patent as aforesaid, has been and now is the owner of all rights in, to and under said Letters Patent and possessed of the entire right, title and interest in and to the same and to the inventions and improvements set forth therein, together with all rights of action, claims and demands arising thereunder, as by reference to said patent and to each and all of the aforesaid assignments and instruments or duly certifield or authenticated copies thereof ready in Court to be produced and of which profert hereby is made, will more fully appear. 14

4. Upon information and belief, that plaintiff's predecessors in title have put forth great effort and have expended substantial sums of money in the development of the processes described and covered by the aforesaid Letters Patent and in making the same useful to the public; that said predecessors in title have produced films in accordance with said processes and the exhibition of the same has caused said processes and the films made in accordance therewith to be favorably known throughout the world, and that the said invention is of great commercial value and utility and constitutes an important advance in the art. 15

16 *Bill of Complaint.*

5. That plaintiff is informed and believes, and therefore avers, that since the date of grant of the aforesaid Letters Patent, and prior to the commencement of the suit, defendant, Paramount Publix Corporation, has infringed and is now infringing upon the rights of plaintiff in, to and under said Letters Patent, by using, within the Eastern District of New York and elsewhere within the United States, the processes described and claimed in said Letters Patent, and by contributing to, instigating, participating in, directing, causing and or abetting the use of said processes within the Eastern District of New York and elsewhere within the United States; all without the license or permission of plaintiff or its predecessors in title, and in violation of plaintiff's exclusive rights under said Letters Patent, and that said defendant threatens to continue to infringe upon the rights of plaintiff under said Letters Patent, said defendant all the while intending and well knowing its acts to be an infringement of the rights of plaintiff under said Letters Patent; wherefore plaintiff has suffered and is suffering great and irreparable loss, damage and injury; and that plaintiff has been and still is being deprived of great gains and profits which it might and otherwise would have obtained, but which have been received and enjoyed and are being received and enjoyed by said defendant by reason of its aforesaid unlawful acts and doings, but to what extent and how much exactly plaintiff does not know and prays discovery thereof; all of which will continue unless further infringement by said defendant shall be enjoined.

17

18

6. (a) That the defendant has been duly notified of said Letters Patent No. 1,825,598 and of

its infringement thereof in violation of plaintiff's rights thereunder.

(b) On information and belief, that defendant has disregarded said notice and continued after said notice and threatens to continue to infringe upon plaintiff's rights under said Letters Patent.

(c) Upon information and belief, that the aforesaid acts and doings of said defendant, and its prepartion to continue the same in disregard and in defiance of plaintiff's rights, have the effect to, and do encourage and induce others to 20
infringe and continue to infringe upon the rights of plaintiff under said Letters Patent.

7. To the end, therefore, that plaintiff may have such relief as it is entitled to in the premises, it prays:

(a) That a process of subpoena issue out of and under the seal of this Court, requiring the defendant, Paramount Publix Corporation, to appear and make full, true, correct and perfect answer to the several matters and things set forth and charged in this bill of complaint (but not un- 21
der oath, an answer under oath being expressly waived).

(b) That the defendant, Paramount Publix Corporation, its officers, directors, servants, agents and all persons, firms and corporations associated with it or acting in its behalf, be perpetually enjoined and restrained by a decree of this Court, from directly or indirectly using or participating in the use of, contributing to, instigating or directing the use of or causing to be used, any and all methods and processes embodying or employing the invention of said Letters

22 *Bill of Complaint.*

Patent, and from infringing upon or contributing to the infringement of said Letters Patent in any manner whatsoever.

(c) That a preliminary injunction issue of like tenor and effect.

(d) That the defendant may be decreed to account for any pay over to plaintiff, all such gains, profits and advantages as have accrued to
23 or have been earned or received by said defendant and all such gains, profits and advantages as would have accrued to or been earned by the plaintiff but for said infringement by said defendant, and also all damages the plaintiff has sustained by said infringement.

(e) That the defendant may be decreed to pay the charges, costs and disbursements of this cause and that the plaintiff may have such other and further relief as the premises and the equity of the case may require and to the Court may seem meet.

24

AMERICAN TRI-ERGON CORPORATION,
By WARD, CROSBY & NEAL,
Solicitors for Plaintiff,
225 Broadway,
New York, N. Y.

Dated, New York, N. Y., November 19, 1931.

S. MORTIMER WARD, JR.,
PAGE S. HASELTON,
of Counsel,
225 Broadway,
New York, N. Y.

State of New York, }
County of New York, } *ss.:*

WILLIAM FOX, being duly sworn, deposes, and says, that he is a resident of Woodmere, Long Island, and is the President of American Tri-Ergon Corporation, the plaintiff named in the foregoing bill of complaint, that he has read said bill of complaint and knows the contents thereof, and that the same is true of his own knowledge, except as to the matters therein stated to be alleged on information and belief, and as to those matters he believes it to be true.

WILLIAM FOX.

Sworn to and subscribed before me this
18th day of November, 1931.

DANIEL G. ROSENBLATT,
Notary Public, New York County,
New York County, Clk's. No. 450, Reg. No. 2R5A,
Kings County, Clk's. No. 247, Reg. No. 2434,
Bronx County, Clk's. No. 74, Reg. No. 3221B,
Term expires March 30th, 1932.

(Notarial Seal)

28

Answer.

UNITED STATES DISTRICT COURT,

EASTERN DISTRICT OF NEW YORK.

AMERICAN TRI-ERGON CORPORATION, Plaintiff, vs. PARAMOUNT PUBLIX CORPORATION, Defendant.	In Equity No. 5800 On Letters Patent No. 1,825,598.

29

The defendant, Paramount Publix Corporation, for answer to the Bill of Complaint herein, says:

1. With respect to paragraph 1, defendant is without knowledge as to the allegations of subdivision (a) thereof; defendant denies, upon information and belief, the allegations of subdivision (b), except that it admits that it is a corpo-
30 ration organized and existing under the laws of the State of New York, that it is a citizen and inhabitant of said State, and that it has a regular and established place of business in Long Island City, County of Queens and State of New York.

2. Defendant admits the allegation of paragraph 2.

3. With respect to paragraph 3, subdivisions (a) and (f), defendant admits that an application in the names of Hans Vogt, Joseph Massolle and Josef Engl was filed in the United States

Patent Office on March 29, 1922, and that on September 29, 1931, Letters Patent No. 1,825,598 were issued to American Tri-Ergon Corporation, but defendant denies, upon information and belief, each and every other allegation contained in subdivisions (a) to (g), inclusive, of said paragraph.

4. Defendant denies, upon information and belief, each and every allegation contained in paragraphs 4 and 5.

5. With respect to paragraph 6, subdivision (a), defendant admits that it received notice of alleged infringement of Letters Patent No. 1,825,-598 but defendant denies, upon information and belief, each and every other allegation contained in subdivisions (a) to (c), inclusive, of said paragraph.

6. Defendant alleges, upon information and belief, that said Letters Patent No. 1,825,598 are invalid and void, because the patentees named therein were not the original, first and joint inventors of the alleged improvements disclosed and claimed therein, and that the same in all their material and substantial respects were known and used by others in this country before the alleged invention or discovery thereof by the said patentees; were patented and described in printed publications in this and foreign countries before the alleged invention or discovery thereof by the said patentees, and more than two years prior to the application for patent of said patentees; were in public use and on sale in this

34 *Answer.*

country more than two years prior to the said application for patent; were described in United States applications for patent filed in the United States Patent Office prior to the alleged invention or discovery thereof by the said patentees; and were first patented or caused to be patented by the alleged inventors or their legal representatives or assigns in foreign countries upon applications filed more than twelve months prior to the filing of the application for said Letters
35 Patent No. 1,825,598.

(a) That the patents and printed publications above referred to, in so far as they have been ascertained are as follows:

UNITED STATES PATENTS.

Number	*Patentee*	*Date*
95,892	Fowx	Oct. 19, 1869
125,522	Bendann, *et al.*	Apr. 9, 1872
36 171,062	Swasey	Dec. 14, 1875
286,343	Stone	Oct. 9, 1883
606,993	Jenkins	July 5, 1898
824,813	Prentiss	July 3, 1906
970,199	Dyer, *et al.*	Sept. 13, 1910
983,801	Barr, *et al.*	Feb. 7, 1911
986,443	Clarke	Mar. 14, 1911
1,233,076	Lowenstein	July 10, 1917
1,252,965	Stocks	Jan. 8, 1918
1,254,684	Greensfelder	Jan. 29, 1918
1,260,337	Craig	Mar. 26, 1918
1,260,338	Craig	Mar. 26, 1918
1,279,099	Gilbert	Sept. 17, 1918

Number	*Patentee*	*Date*
1,320,760	Ives	Nov. 4, 1919
1,335,651	Bullis	Mar. 30, 1920
1,397,602	Owen	Nov. 22, 1921
1,446,246	De Forest	Feb. 20, 1923

FOREIGN PATENTS.

18,057	British	Haines	1906
6,727	British	Downing	1913
18,163	British	Kindermann	1913
115,942	British	Pedersen	1918

(b) That the instances of prior invention, knowledge, use and sale above referred to in so far as they have been ascertained are as follows:

By the patentees of the patents and by the authors of the publications in subdivision (a) above at the places therein stated and elsewhere in the United States.

(c) That the applications for patents above referred to, in so far as they have been ascertained as are follows:

The applications for Letters Patent of the United States listed in subdivision (a) above.

(d) That the above referred to foreign patents obtained by the alleged inventors or their legal representatives or assigns, in so far as they have been ascertained are as follows:

40 *Answer.*

French Patent No. 532,750 granted November 21, 1921, upon an application filed in France on March 25, 1921.

7. Defendant alleges, upon information and belief, that by reason of the proceedings in the United States Patent Office during the prosecution of the application which resulted in said Letters Patent No. 1,825,598 and the admissions and representations therein made by or in be-
41 half of the alleged inventors in order to induce the grant of the said Letters Patent, the plaintiff is estopped to claim for said Letters Patent a construction, were the same otherwise possible, as would cause said Letters Patent to cover or include any process used or caused to be used by the defendant.

8. Defendant alleges, upon information and belief, that said Letters Patent No. 1,825,598 are invalid and void because the alleged improvements described and claimed therein did not con-
42 stitute patentable subject-matter within the meaning of the Patent Laws, in view of the prior state of the art and what was common knowledge on the part of those skilled in the art; all prior to the date of the alleged invention thereof by the patentees named therein.

9. Defendant alleges, upon information and belief, that said Letters Patent No. 1,825,598 are invalid and void or cannot be given a valid interpretation which would bring any acts of the defendant within the scope thereof because the alleged invention described and claimed in said

Answer.

Letters Patent was not described or claimed in the original application as filed, upon which said Letters Patent were granted, but on the contrary constitutes new matter illegally and unjustifiably added to the said application subsequent to the filing thereof.

WHEREFORE, the defendant prays that the bill of complaint herein be dismissed with costs to the defendant.

PARAMOUNT PUBLIX CORPORATION,
By CHARLES NEAVE,
Counsel for Defendant.

CHARLES NEAVE,
Solicitor for Defendant.

Order Dated November 18, 1932, Amending Answer.

UNITED STATES DISTRICT COURT,

EASTERN DISTRICT OF NEW YORK.

	AMERICAN TRI-ERGON CORPORATION, Plaintiff, vs.	In Equity No. 5800.
47	PARAMOUNT PUBLIX CORPORATION, Defendant.	

It is, upon motion of the defendant and the annexed consent of the plaintiff, Ordered:

That defendant's answer be and the same is hereby amended to include in the lists of patents in paragraph 6 (a) thereof, United States Patents No. 1,186,717 to J. L. Walker, dated June
48 13, 1916, and No. 1,489,314 to Lee De Forest, dated April 8, 1924, and German Patent No. 279,-598 to Reimer, of 1914.

MARCUS B. CAMPBELL,
United States District Judge.

November 18, 1932.

Consented to:

S. MORTIMER WARD, JR.,
Counsel for Plaintiff.

Order Dated November 23, 1932, Amending Answer.

UNITED STATES DISTRICT COURT,

EASTERN DISTRICT OF NEW YORK.

AMERICAN TRI-ERGON CORPORATION, Plaintiff, vs. PARAMOUNT PUBLIX CORPORATION, Defendant.	In Equity No. 5800.

50

It is, upon motion of the defendant and the annexed consent of the plaintiff, Ordered:

That defendant's answer be and the same is hereby amended to include in the lists of patent in paragraph 6 (a) thereof, United States Patent No. 1,286,383 to Oskar Messter, dated December 3, 1918.

51

MARCUS B. CAMPBELL,
United States District Judge

November 23, 1932.

Consented to:
S. MORTIMER WARD, JR.,
Counsel for Plaintiff.

Narrative and Condensed Statement of the Testimony.

UNITED STATES DISTRICT COURT,

EASTERN DISTRICT OF NEW YORK.

AMERICAN TRI-ERGON CORPORATION,
Plaintiff,
vs.
PARAMOUNT PUBLIX
53 CORPORATION,
Defendant.

Before:

HON. MARCUS B. CAMPBELL,
U. S. D. J.

Brooklyn, N. Y., November 28, 1932.

APPEARANCES:

WARD, CROSBY & NEAL, ESQS., Solicitors for Plain-
54 tiff, by S. Mortimer Ward, Jr., Esq., and Page S. Haselton, Esq., of Counsel.

CHARLES NEAVE, ESQ., HENRY R. ASHTON, ESQ., E. J. DRISCOLL, ESQ., and F. T. WOODWARD, ESQ., Counsel for Defendant.

Mr. Ward: I offer in evidence a photostatic copy of the patent in suit to be marked Plaintiff's Exhibit 1.

(Marked Plaintiff's Exhibit 1 in evidence.)

Mr. Ward: I will state that we rely upon Claims 5, 6, 7, 8, 9 and 11.

55

I offer in evidence certified copy of disclaimer with respect to Claims 6 and 7 of the patent in suit as Plaintiff's Exhibit 2.

(Marked Plaintiff's Exhibit 2 in evidence.)

Mr. Ward: I offer in evidence certified copy of File Wrapper and contents of the application for patent in suit as Plaintiff's Exhibit 3.

(Marked Plaintiff's Exhibit 3 in evidence.)

Mr. Ward: I offer in evidence certified copy of the decision of the Examiners of Interferences in Intereference No. 53,103, and of the decision of 56
the Board of Appeals, Patent Office, in the same case, to be marked Plaintiff's Exhibits 4 and 4-A.

(Marked Plaintiff's Exhibits 4 and 4-A in evidence.)

Mr. Neave: Are you offering the rest of that interference history?

Mr. Ward: No; we will just offer the decisions.

Mr. Neave: Then I object to the decisions without the rest, your Honor. It does not mean much unless we know what the procedure was on which the decisions were based. 57

The Court: I do not think that I can refuse to accept it, but so far as the weight of it is concerned, I suppose it would be quite limited. I would not understand what it was based on. Now, I am not urging you. It is up to you. You can well understand that I would not know much about it except what someone has said.

Mr. Ward: I do not care much, your Honor. It really is not very pertinent here. I simply want to show that we were awarded priority.

The Court: That, I suppose, they do not controvert.

58 *Case.*

Mr. Ward: I would also like to place on the record that decision of the Court of Customs and Patent Appeals in that interference is to be found in 49 Fed., 2nd, page 1075.

I would like to offer in evidence copy of the DeForest patent involved in that interference, No. 1,489,314, as Plaintiff's Exhibit 5.

(Marked Plaintiff's Exhibit 5 in evidence.)

Mr. Ward: I offer in evidence photostatic copy of the original German application as filed, on
59 which the application for patent in suit is based on priority, being German application V16,431 V157, a2.

Mr. Ward: Together with a translation which, subject to correction, we have agreed upon.

(Marked Plaintiff's Exhibit 6 in evidence.)

Mr. Ward: I offer in evidence certified copy of assignment from Vogt, *et al.*, inventors of the patent in suit, to Tri-Ergon, Ltd., dated June 3, 1924.

(Marked Plaintiff's Exhibit 7 in evidence.)

Mr. Ward: I offer in evidence the photostatic
60 copy of agreement between Tri-Egron A. G. and William Fox, dated September 4, 1928, as Plaintiff's Exhibit 8.

(Marked Plaintiff's Exhibit 8 in evidence.)

I offer in evidence a photostat copy of the agreement between Tri-Ergon A. G. and Tri-Ergon Musik, dated November 8th and 15th, 1926, and a translation thereof.

(Marked Plaintiff's Exhibit 9 in evidence.)

Mr. Ward: I offer in evidence a certified copy of an assignment from Tri-Ergon A. G. to William Fox, including the patent in suit.

(Marked Plaintiff's Exhibit 10 in evidence.)

Mr. Ward: I offer in evidence a photostat copy of an assignment from William Fox to American Tri-Ergon Corporation, of certain patents, including the patent in suit. 61

(Marked Plaintiff's Exhibit 11 in evidence.)

Mr. Ward: I offer in evidence two combined statements and stipulations in the case, dated respectively November 17th and 26th, 1932.

(Marked Plaintiff's Exhibit 12 in evidence.)

I will also ask that these two papers be copied in the record. 62

[SAME TITLE]

"1. Defendant for the purposes of this suit, but only for such purposes, states that one or more of defendant's employees, if called as witnesses, would testify that the defendant has used in making sound motion pictures in the Eastern 63 District of New York, prior to the commencement of this suit and subsequent to the granting of the patent in suit, a process which includes the following: A series of scenes to be reproduced have been photographically recorded upon a film of negative stock to make a motion picture negative; a series of sounds accompanying the scenes, such for example as speech and music, have been photographically recorded upon a separate film of positive stock simultaneously with the recording of the scenes to make a sound negative; the exposed separate picture and sound films thus

64 *Case.*

made have been developed separately by machine; the formula for the developer used in developing said sound negative is not identical with that used in developing said picture negative but is of the same character; the time of development in the two cases is different; a sample strip of sound negative thus made is attached hereto marked 'Exhibit 1 for identification' and is a fair example of the resulting product; a sample strip of motion picture negative thus
65 made is attached hereto marked 'Exhibit 2 for identification' and is a fair example of the resulting product; the picture and sound negatives thus made on separate films have been printed successively in proper spaced relation, upon the same surface of a positive film; this exposed positive film is then developed by machine; a sample strip of positive film thus made is attached hereto and marked 'Exhibit 3 for identification' and is a fair example of the resulting product. Defendant agrees that the foregoing statement may be used with the same force
66 and effect as if one or more of defendant's said employees had been called as a witness and duly testified thereto.

"Each of the parties reserves the right to offer additional evidence relating to the defendant's above process.

STIPULATION.

"It is hereby stipulated and agreed by and between counsel for the respective parties, for the purpose of this suit only.

67

"2. That plaintiff, American Tri-Ergon Corporation, is a corporation of the State of New York, incorporated April 28, 1928, having a place of business in the Borough of Manhattan, County and State of New York.

"3. That printed or photostatic copies of United States and foreign patents may be introduced in evidence at the trial in lieu of the originals or certified copies thereof with the same force and effect as the originals duly proved, and 68
the dates appearing thereon shall be accepted as correct, subject to correction should error appear; and photostatic copies of printed publications may be introduced in evidence at the trial in lieu of originals thereof, with the same force and effect as originals thereof duly proved; and the dates of publication appearing thereon shall be accepted as correct, subject to correction should error appear.

"4. That plaintiff will rely upon claims 1 and 5 to 11, inclusive, of the patent in suit, claims 69
5, 7, 8 and 9 being designated as 'typical' claims.

"5. That the citizenship and residences of the patentees, Hans Vogt, Joseph Massolle and Josef Engl, are as pleaded in the bill of complaint herein.

"6. That so far as concerns the objection that copies are offered in lieu of originals, and subject to correction should error appear, defendant will not object to the admission in evidence of photostatic copies of the alleged assignments

and agreements referred to in paragraphs 3 (c), 3 (d) and 3 (e) of the bill of complaint, nor to copies of any such alleged assignments certified by the Commissioner of Patents as being true copies of assignments as recorded in the United States Patent Office, nor to a photostatic copy of a certain agreement between Tri-Ergon, A. G., of Zurich, Switzerland, and Tri-Ergon Musik, A. G., of St. Gall., Switzerland, dated November 8, 1926 and November 15, 1926, and such copies
71 shall have the same force and effect as the originals duly proven; but defendant reserves the right to object to their admission on any other ground or for any other reason.

"7. That subject to correction should error appear, a photostatic copy of a certified copy of German application of Vogt, Massolle and Engl, No. V 16431 VI/57a2, filed in the German Patent Office April 14, 1921, now on file in the United States Patent Office and certified by the German Patent Office, to be a true and exact
72 copy of the original papers of said German application, may be accepted in evidence with the same force and effect as the said original German application duly proven, including the date of filing, but defendant reserves the right to object to the admission of said photostatic copy on any ground that it might object to the duly proven original.

"8. That as to German application of Vogt, Massolle and Engl, filed in the German Patent Office on April 2, 1919, No. V. 14,634 IX/57 a 2, and referred to in French Patent No. 532,750,

set up in defendant's answer; a copy thereof certified by the German Patent Office as a correct and exact transcript of the original basic document of said application, may be accepted in evidence with the same force and effect as the said original German application duly proven, including the date of filing, but defendant reserves the right to object to the admission of said photostatic copy on any ground that it might object to the duly proven original.

"9. That subject to correction should error 74
appear, the copy of the file history of the above mentioned original German application of the said Vogt, Massolle and Engl No. V 16431 VI/57a2 which copy is certified by the German Patent Office, has attached thereto a United States consular certificate, and has been initialed by counsel for both parties to this suit, may be accepted in evidence with the same force and effect as the original of the said file history duly proved, but plaintiff reserves the right to object to the admission of the said certified copy on 75
any ground that it might object to the duly proved original.

"10. That Dr. Adolf Blatter, President of Tri-Ergon, A. G., if called as a witness on behalf of the plaintiff in this case, would testify that the corporation, variously referred to in one or more of the papers relating to the title to the patent in suit as 'Tri-Ergon Limited' and 'Tri-Ergon, A. G.,' is one and the same corporation, the name of which is Tri-Ergon A. G., and that this stipulation shall be given the same force

76 *Louis B. Hoffmann—For Plaintiff—Direct.*

and effect as if the said Adolf Blatter were called as a witness and testified as above stated.

"11. That as at present advised, defendant will rely at the trial upon the following prior patents as anticipations of the alleged invention of the patent in suit:

UNITED STATES PATENTS.

77

606,993	Jenkins	July 5, 1898
1,186,717	Walker	June 13, 1916
1,252,965	Stocks	Jan. 8, 1918
1,254,684	Greensfelder	Jan. 29. 1918
1,260,337	Craig	Mar. 26, 1918
1,260,338	Craig	Mar. 26, 1918
1,335,651	Bullis	Mar. 20, 1920
1,489,314	DeForest	Apr. 8, 1924

BRITISH PATENTS.

78

18,163	Kindermann	1913
115,942	Pedersen	1918

GERMAN PATENTS.

279,598	Reimer	1914

"12. That plaintiff will consent to an order amending defendant's answer to include in the lists of patents in paragraph 6 (a) thereof, United States Patents No. 1,186,717 to J. L. Walker, dated June 13, 1916, and No. 1,489,314

79

to Lee De Forest, dated April 8, 1924, and German patent No. 279,598 to Reimer, of 1914.

"13. That this suit is being openly defended by Electrical Research Products, Inc., a wholly owned subsidiary of Western Electric Co., Inc.

(Signed) S. MORTIMER WARD, JR.,
Counsel for Plaintiff.

" HENRY R. ASHTON,
Counsel for Defendant.

Dated: New York, N. Y.,
November 17, 1932."

80

[SAME TITLE]

"1. Defendant for the purposes of this suit but only for such purposes, states that one or more of defendant's employes, if called as witnesses, would testify that the process which the defendant has used in the making of sound motion pictures in the Eastern District of New York, prior to the commencement of this suit and subsequent to the granting of the patent in suit, includes the following:

81

"2. The developer formula used for developing the picture negative is as follows:

Elon	—2.75 lbs.
Sodium Sulphite	—420 lbs.
Hydrochinon	—2.75 lbs.
Borax	— 1 lb., 3 oz.
Water to make	—600 gals.

"3. The developer formula for developing the sound negative is as follows:

Elon	—14 lbs.
Sodium Sulphite	—498 lbs.
Hydrochinon	—32 lbs.
Borax	—21 lbs.
Boric acid	—73.5 lbs.
Water to make	—600 gals.

83 "4. In developing the picture negative by machine, the various scenes taken during the day, including those photographed in the studio by artificial light and those photographed outside the studio by daylight, are run through the developing machine as one continuous film and all receive the same development.

"Each day before development is begun, a short piece of film, known as a sensitometer strip is run through and developed by the machine. The contrast to which this strip has been developed is then determined. If the contrast is
84 either greater or less than the standard contrast given by the defendant to all its picture negatives, the time of development is changed between the limits of 9 and 12 minutes, by adjusting the speed of film travel through the machine.

"The developing solution is maintained at a constant strength at all times. This is accomplished by adding fresh developer at a predetermined uniform rate. The developer is maintained at all times at 65° Fahrenheit.

"5. In developing the sound negative by machine, the various sound recordings, made during the day, are run through the developing machine

as one continuous film and all receive the same development. 85

"Each day before development is begun a sensitometer strip is run through and developed by the machine. The contrast to which this strip has been developed is then determined. If the contrast is either greater or less than the standard contrast given by the defendant to all its sound negatives, the time of development is changed between the limits of 4 and 5 minutes, by adjusting the speed of film travel through the machine. 86

"The developing solution is maintained at a constant strength at all times. This is accomplished by adding fresh developer at a predetermined uniform rate. The developer is maintained at all times at 65° Fahrenheit.

"One or more pictures produced by the defendant, contained one or more outdoor scenes which were photographed by daylight in addition to studio scenes photographed by artificial light.

"7. The time of development of the picture negative is between 9 and 12 minutes and the time of development of the sound negative is between 4 and 5 minutes. 87

"8. The over-all gamma of the picture record is substantially 1.2 and the over-all gamma of the sound record is substantially 1.0.

"9. In recording the sound, the source of light is a lamp which is operated at constant intensity. The amount of light from this lamp which reaches the film is varied by a device known as

88 *Louis B. Hoffmann—For Plaintiff—Direct.*

the Light-Valve in accordance with the sound waves being recorded.

"10. Each of the parties reserves the right to offer additional evidence relating to the defendant's above process.

(Signed) HENRY R. ASHTON,
Counsel for Defendant.

Dated: New York, N. Y.,
89 November 26, 1932."

Mr. Ward: Accompanying that first statement of defendant's in Exhibit 12 there are some strips of film which I offer in evidence as Plaintiff's Exhibit 12-A. Those strips of film are referred to in the first paper of Exhibit 12 as Exhibits 1, 2 and 3 for identification.

90 ---

LOUIS B. HOFFMANN, called as a witness on behalf of the plaintiff, having been duly sworn, testified as follows:

Direct Examination by Mr. Ward:

My name is Louis B. Hoffmann; 35 years of age; I reside in Rye, New York; and I am at present employed by Mr. John Joy, who is Technical Adviser to the American Tri-Ergon Corportion.

Louis B. Hoffmann—For Plaintiff—Direct. 91

I have been connected with the sound motion picture business since April of 1925, when I was employed by the DeForest Phono-film Corporation as chief recording engineer and laboratory assistant to Dr. Lee DeForest of the corporation, until 1928, at which time I was employed by the Fox Film Corporation as Technical Director of the Fox Movietone News, and later as Assistant to the Director of Research and Development Division of the Fox Corporation.

I am in general familiar with the formula 92
which the defendant supplied to the plaintiff. I have a copy of that formula. I have conducted work with a view of determining the differences or difference in the action of those formulas on film. I mixed two chemical baths which are identical with the ones used by the defendant. I did not want to mix 600 gallons of developer, so I reduced the various amounts of chemicals that were stipulated in proportion to one gallon of developer of each kind, one of the sound bath and one of the picture bath—I made a photograph on motion picture film— 93

Q8. That is to say, you took this formula, and by reducing the quantities of it, you mixed up a quantity of the formula for the sound developer and then you mixed up a quantity in reduced quantities of the developer for the picture film, as given by the defendant? A. Yes, that is correct.

The Court: Made a gallon of each?
The Witness: Made a gallon of each.

Q9. Have you got the figures with you that you used in reducing those proportions? A. I have

94 *Louis B. Hoffmann—For Plaintiff—Direct.*

here the exact weights of each chemical as used in the particular baths which I mixed, showing the amounts of each chemical. Do you wish me to read these?

Q10. After you reduced these proportions down, as you state, did you have precisely the same percentage of the different ingredients in each formula, as called for by the formula? A. Yes, I did.

95 The Court: What did you do? Did you divide each of them by 600?

The Witness: That is it, substantially what I did.

Q11. You said that you had the sound developer in one tank or container, and the picture developer in the other. A. I made a photograph on the usual negative film employed in the motion picture industry, and from a strip of that 10 feet long, I tore it in two, and developed one-half of the negative in one batch of developer, namely, the sound developer, and the other half
96 in the picture developer. These two pieces of film were on the same emulsion, they were developed the same time, the same length of time in their respective baths at the same temperature. At the same time with these two pieces of film were developed—

Q12. How did you know that the temperature of the two baths was the same, the two developers? A. Because the two tanks in which were the two separate developers were surrounded by uniformly tempered water, so that the temperature of the developer was the same as the temperature of the water surrounding both baths,

and the developing tanks were immersed for a long enough time so that the temperature of the developer had become equalized with the temperature of the water surrounding the tanks. The temperature in the two tanks was 65 degrees Fahrenheit. I measured it with a thermometer. The tanks that I had these two developers in were hard rubber tanks.

Q16. Now, you got to the point where you stated that you had taken about a ten-foot length of motion picture film or picture on a motion picture machine. Was that whole 10 feet taken at the same time or at some different time? A. The whole 10 feet were taken at the same time.

Q17. Just in one shot? A. That is right. As a matter of fact, it was a 10-foot section of a section about 30 feet long that was all exposed at the same time; after I took that picture, I tore about a 10-foot strip off and divided that in half and then developed one-half in one of these tanks and one-half in the other. I developed those pictures in those tanks of developer in this way. Each one of these two separate pieces of negative were wound on a core, a reel such as is used in developing a film, short pieces of film. The reel itself was then immersed in the liquid and at regular intervals of one minute, each core was raised and lowered the same number of times in each bath. So I had the same temperature in each of the developers and developed each the same length of time.

Q21. And you had the same agitation or handling of the two pieces of film one in each tank? A. Yes, there was the same agitation of the core in each tank because I had one core in one hand and one core in the other hand, and the reel

100 *Louis B. Hoffmann—For Plaintiff—Direct.*

itself was not lifted out of the developer during that process. I gave each of the pieces of film exactly the same treatment, except for the differences, if there were differences, in the two developers.

Q23. Now, you started to say that at the same time you developed the two negatives in that way, you developed some strips. Will you go ahead and explain that? A. I developed two strips, one with each negative strip. These strips
101 were uniformly exposed on the same original negative emulsion, unexposed emulsion, in the manner in which it is done in the motion picture industry, for determining the degree of development of a piece of film, a strip called a sensitometer strip, which were exposed in the latest type Eastman sensitometer called the type 2B, and the exposures were made at the Eastman Kodak place in New York here, with the proper illumination for the negative film that I was using. These strips, as I say, were then—one was developed with one picture negative and the
102 other with the opposite picture negative—

24. That is, you took one of these testing strips and you put it in one tank with one of these films, picture films, and you took the other and put it in the other tank with the other picture film? A. That is correct. They were developed the same time and at the same temperature as the picture negatives were.

I did all of this developing and handling work myself.

The extent to which the development had been carried on, the degree of development in each of these baths, can be measured by measuring the capacity or the density of the exposures which

have been made with this device called the sensitometer. By plotting the densities read on a device called the densitometer, density meter, by plotting the absolute measurements gotten from that device on a curve sheet, which has as one axis the logarithm of the exposure, and the density as the other axis, it is possible to determine by the slope of the straight line section of that curve the degree of development or at least use that as a measure of the degree of development of the film. That is a practice which 104
is commonly used in the motion picture industry for determining the degree of development of the film. I have plotted those curves, and they form part of this exhibit—

Q28. Both with respect to the picture negatives and these strips which you developed, what did you do with respect to them, in the way of washing or drying, and so forth? A. After development was completed of these two strips, and they were developed exactly the same length of time, they were immersed in the hypo solution, which is commonly used for fixing out the unexposed silver salts, and after that operation was 105
completed, they were thoroughly washed in order to remove any of the existing chemicals that may still be in the film, and the film dried.

Q29. Were those treatments the same or different with respect to the strip and the film that you had in the sound developer and with respect to the strip and picture film that you had in the picture developer? A. Those treatments were identical. They were immersed in the same solution of hypo and the same solution of water.

This is again a curve in which I have plotted the densities and shows the different degree of

106 *Louis B. Hoffmann—For Plaintiff—Direct.*

development which is obtained in the defendant's picture developer as against the degree of development obtained in the defendant's sound developer. On this chart I have the curve B marked, using defendant's sound developer. And then the lower curve marked A is the curve using the picture developer.

Q33. From what data did you plot these curves? A. I have here a laboratory sheet on which I recorded the measurements as I actually
107 made them.

Q34. Where did you get those readings from that are here on this chart or sheet? A. They were the readings given by a device called the densitometer, which is substantially a photometric device for measuring the darkness of a piece of exposed film.

Q35. What is it you tested in the densitometer to get these readings? A. I tested these sensitometric strips which are marked A and B, respectively. That is, the readings that appear on this sheet are the readings taken from the strips that
108 I developed in these two tanks. I took these readings personally. I plotted the curves. I did all this work personally.

Q41. Will you please take the other chart, the other curve sheet you have in your hand, and explain that before I offer it in evidence? A. In order to plot the density values read on the densitometer to a scale of opacity, in other words, the degree of darkness, I placed these curves here and marked them respectively A and B. I am referring now to the curve shown on the sheet marked opacity.

Mr. Ward: I offer a photostat copy of the densitometer readings shown on the

sheet entitled, "Density readings of sensitometer strips", referred to by the witness Hoffmann. 109

(Marked Plaintiff's Exhibit 13 in evidence.)

Mr. Ward: I offer in evidence a photostat copy of the gamma curve referred to by the witness Hoffmann.

(Marked Plaintiff's Exhibit 14 in evidence.)

Mr. Ward: I offer a photostat copy of the opacity curve referred to by the witness Hoffmann. 110

(Marked Plaintiff's Exhibit 15 in evidence.)

The Witness: I have here a paper which is the work sheet from which I figured out the reduced quantities of ingredients for the two developers which I referred to. And these reduced quantities shown on the sheet are the actual quantities that I used.

Mr. Ward: I offer the work sheet in evidence. 111

(Marked Plaintiff's Exhibit 16 in evidence.)

Q46. Mr. Hauffmann, with regard to the picture strips which you developed, have you any part of those strips there, and if so, please state what they are? A. Yes, I have a part of each one of the five-foot strips that were developed in accordance with my testimony. This strip marked A was developed in the defendant's picture developer and the one marked B was developed in the sound developer.

112 *Louis B. Hoffmann—For Plaintiff—Direct.*

Mr. Ward: I offer in evidence the picture strip referred to by the witness as being developed in the defendant's picture developer.

(Marked Plaintiff's Exhibit 17 in evidence.)

Mr. Ward: And I offer in evidence the piece of negative referred to by the witness Hoffmann as developed in the defendant's sound developer.

113 (Marked Plaintiff's Exhibit 18 in evidence.)

Q49. Referring to the two pieces of picture negative, Plaintiff's Exhibits 17 and 18; will you please state what position they bore with respect to each other on the piece of negative film that you testified you developed? A. These two pieces were photographed directly adjacent to each other. By examining the two pieces, you can see where the two were torn and the separation mark identifies them. That is to say the tearing of the
114 two pieces shows where they match one on the other. Then, after tearing them in this manner, I developed them separately in the two developers, as I have stated.

Q52. Now, did you print any pictures from any parts of these two negative strips, 17 and 18? A. Yes, that photograph which you have in your hand is a paper print made of two frames of pictures, one from each of these two pieces of film that are marked Exhibits 17 and 18. That is, one of those pictures was made from one frame on one of those exhibits, Exhibit 17, and the other picture was made from another frame, on Exhibit 18.

115

Q54. Can you state how far apart those two frames were from each other on that strip of film? A. They were seven frames apart on the original film, which means a time difference of about a quarter of a second or thereabouts.

Q55. What are the frames that you used in printing those pictures? A. They are the two frames that are on the end of the straight cut portion. That is, they are taken respectively from the last frame on Exhibit 17 and the last frame on Exhibit 18.

116

The lower picture was printed from the negative developed in the sound developer bath and the picture at the top was printed from the negative developed in the picture developer bath. The lower one was printed from Exhibit 18, the upper one was printed from Exhibit 17.

Mr. Ward: I offer the two pictures on one sheet referred to by the witness as Plaintiff's Exhibit 19.

(Marked Plaintiff's Exhibit 19 in evidence.)

117

These photographs were made in the Seidman Photographic Laboratory. I was a witness to the photographing of them.

I saw the photographing made, under my supervision.

Q62. Will you please state how they were made from those two negatives? A. These two negatives were placed between two pieces of clear glass to flatten them out, and also to get the two pictures from the respective exhibits adjacent to each other. Light was projected through those two frames and printed on to that piece of paper, which has been offered in evidence.

118 *Louis B. Hoffmann—For Plaintiff—Direct.*

Q63. Will you explain just what the difference is in those two pictures with respect to the developer or development? A. In the photographic art, one would be considered a normal or a soft picture, and the other one would be called a contrasting picture, one in which the highlights and shadows have been distorted beyond their natural shades.

Q64. Which is the better picture from the standpoint of a motion picture? A. From an ex-
119 amination of this print, I would say that the one that was developed in the picture bath. The upper one. And the lower one is the one that I refer to as being light or harsh.

The Court: The lines are more sharply defined in the lower one?

The Witness: There are, however, details which are missing in the lower picture.

The Court: I say the lines are not sharply defined?

The Witness: Yes.

120 The Court: They do not smooth off?

The Witness: That is correct.

Q67. You will find the details more properly brought out in the upper one, you say? A. Yes. For example, the texture of the sweater is quite distinct in the upper photograph, whereas it is missing in the lower one.

Q68. To what do you attribute the difference in the quality or character of those two pictures? A. Because of the difference in the development of the original negatives. That is, the difference in the developer that was used in the two negatives.

Q70. Have you examined the two negatives from which these two pictures respectively were taken, to see whether you could see the same contrast there? A. You can't see the same contrast but anyone experienced in the art can immediately determine that one negative is much harsher than the other.

Q71. Which is the harsh one? A. The one that was developed in the sound developer bath.

Q72. Now, you described the method in which, the procedure which you followed, or was followed under your supervision, to take these two pic- 122
tures in these two negative frames. Under that procedure were the light conditions different for the two pictures, or the same? A. No, they were identical. One source of illumination was used to enlarge these two small photographs on the same paper. That is part of the same light source went through one frame, and part through the other.

Q74. With regard to the results shown by these curves, I am handing you Plaintiff's Exhibit 15, the opacity curves, will you please point out wherein these curves show a different or similar 123
contrast shown by these two pictures that you testified about? A. Exhibit 15 shows at the right-hand side of the chart, the wide difference in the opacity of the film strip developed in the sound developer B, and the one in developer A. That means that the high lights of the original subject are modified, or the differences between these two are magnified in developing in the separate solutions. It also means that there is much less detail in the high lights. That is, the curve B on that exhibit corresponds to the lower picture of Exhibit 19. And the lower curve A corresponds to the upper picture on Exhibit 19.

124 *Louis B. Hoffmann—For Plaintiff—Direct.*

Q77. Then you find the same results in both of these tests that you have carried out, the one of the photograph obtained, and the curves from the densitometer sheets? A. Yes, these test strips bear out the effect that we noticed in the pictures that were printed from the negatives.

Q78. This method of using these test strips to test out developer solutions: is that something of your own idea, or is that something that is used in the industry right along for that purpose? A. No, it is a well known process used in the art
125 every day, for determining the extent to which the development has been carried out.

Q79. You have referred in your testimony to these test strips that you developed along with the two picture negatives, Exhibits 17 and 18.

Q80. Have you got those strips? A. Yes, I have them.

Q81. Will you please tell the Court which is which? A. This strip was developed with the picture negative developed in the sound developer bath.

Q82. Exhibit 18 was of the sound developer
126 bath? A. This was developed along with Exhibit 18.

Q83. And that is the strip from which you took the readings on Exhibit 13, the readings marked sound developer? A. That is correct.

Mr. Ward: I offer the strip of test film referred to by the witness in evidence.

(Marked Plaintiff's Exhibit 20 in evidence.)

Q84. The other strip that you have there, that is the strip developed with which picture nega-

tive? A. With the picture negative, marked Exhibit 17.

Q85. And is that the strip from which you got the data shown on Exhibit 13, marked picture developer? A. That is correct.

Mr. Ward: I offer the strip last referred to by the witness as developed by the defendant's picture developer in evidence.

(Marked Plaintiff's Exhibit 21 in evidence.)

Cross Examination by Mr. Neave: 128

I am at present employed by Mr. Joy who is technical adviser of the American Tri-Ergon Company. I am with the American Tri-Ergon Company, and have been since approximately the middle of July of this year. Prior to that time, I was with the Fox Film Corporation. —Since 1928.

Before that time, I had something to do with these talking moving pictures, since April, 1925, to April, 1928, I was with the DeForest Phonofilm Corporation. And before 1925, I was with 129 the American Telephone and Telegraph Company.

As to the class of my duties from the time I was with the DeForest Company in 1925, I was in the technical end, in the photographing.

I had to do with the process of recording sound on films, quite a bit to do with the experimental work that was being carried on by Dr. DeForest at that time, toward improving the phonofilm.

I took talking movies myself, from 1925 on to 1928.

XQ99. Did you develop talking movies? A. Beg pardon?

130 *Louis B. Hoffmann—For Plaintiff—Cross.*

XQ100. Have you done any developing yourself of the films? A. Not of the actual films, no.

XQ101. Then your technical work has not been in connection with the chemistry of the films or with emulsions or anything of that sort, or with the developing, but has been rather with the taking of the pictures? A. Yes, but more lately with the control work necessary for processing film, that was in connection with my work with the Fox Film Corporation.

By control work necessary for processing film,
131 I mean the methods that are devised for uniformly processing films.

By processing, I mean developing and printing.

I have taken the so-called Movietone pictures or newsreel pictures.

XQ105. During what period have you done that? A. The early pictures that were made in the DeForest Phonofilm Corporation were done that way, in which the sound and pictures were recorded on the one film, the so-called single system.

XQ106. How recently have you done that work?
132 A. As recently as 1928.

XQ107. Even then for these movitones and the newsreels that had the sound and pictures both, they were taken on one negative, on one strip? A. That is correct.

> Mr. Ward: I object, I think Mr. Neave is going beyond the direct testimony. I introduced this witness for the sole purpose of testifying how these solutions compared, and showing the relative merits. He is trying to develop the prior art, prior practice, and I object.

Mr. Neave: This may or may not be prior practice.

The Court: I do not know. If you go beyond the direct, you will make him your witness.

XQ108. In these Movietones, and in the newsreels, where you take the sound and picture on the same negative, you do not split that negative into two, before you develop it, do you? A. No, sir. 134

XQ109. Sound and picture is developed at the same time on the same negative film? A. That is correct.

I have not had anything to do with the preparation of emulsions, and devising developers for these emulsions.

XQ113. Have you ever had anything to do with the developing of separate negatives which would be united on a positive film afterwards? A. Yes, sir. In my connection with the Fox Film Corporation, I started to tell you before, our department had charge of the technical control over the film 135 developing plant, and in that connection at various times, I was the head of the department while my superior was out of town, and in that connection the responsibility for the developing machines, which developed the pictures and the sound separately, came under my supervision. I am absolutely familiar with what are called positive emulsions and negative emulsions.

These tests that I have been speaking of this morning on these photographs, was done quite recently, within the last month.

Negative panchromatic emulsion was used on that film.

136 *Louis B. Hoffmann—For Plaintiff—Cross.*

There was only one emulsion used in my tests. And I applied to that one emulsion, what I call two different developers.

XQ121. Did you know what those two different developers were? Where did you get the formulae for those? A. They were stipulated by the defendant.

XQ122. And you know that the defendant has not used those two developers on the same emulsion? A. I believe that is—I have been told that,
137 yes.

XQ123. That is, to use one developer for the positive emulsion and one developer for the negative? A. Yes. And I used them both for the negative.

XQ125. Referring to your curve, Exhibit 14, which is headed, "Gamma Curve," will you tell me what is shown by that? Don't do it technically, ir you can avoid it. A. It shows the relations—when developed, rather, with a picture negative, it shows the relative weights of the various gradations of exposure on the film. It shows, in
138 other words, the difference between the lightest portion and the darkest portion, the grade of that difference.

XQ126. What does that word "step" mean at the bottom of the chart? A. That is the word that is used in the art to denote the exposure step as used in the device which exposes the strips on the emulsion.

XQ127. Then the exposure is your duration times intensity, is that correct? A. That is correct.

XQ128. Intensity of light. So you plot along on the horizontal line the exposures? A. That is correct.

XQ129. So that this Exhibit 14 means, for instance, that with a certain exposure, say, represented by the numeral 17, you get a greater density on the film if you use the sound developer than if you use the picture developer? A. That is correct.

XQ130. Why do you get that difference, do you know? A. Because of the action of the developing agents that are in the chemical bath.

XQ131. They are the same chemicals, are they not? A. They are of the same kind, but different proportions, different amounts. 140

XQ132. That is, the same chemicals, but different proportions of those same chemicals? A. That is correct.

XQ133. What is it, in that proportion, if you know, that gives you the effect that is shown on your Exhibit 14, when you use both on the same emulsion? A. Why, it is impossible to predict just how much effect the particular proportions that are stipulated by the defendant are going to give. The only way to determine that is empirically, by experiment.

XQ134. They may not give any difference in 141 results if you use them on different emulsions rather than on the same emulsions? A. That is something which no one could predict.

XQ135. Have you ever tried it?

The Court. That is purely speculative, is that it?

The Witness: They would have to be tested by experiment.

XQ136. Have you ever tried the positive developer on a positive film, and the negative de-

veloper on a negative film? A. In this particular case, no sir.

XQ138. How does curve Exhibit 15 differ from Exhibit 14? One has what I call curves on it, the other has straight lines on it. A. In the case of the second curve, the density values, as measured, were converted into opacities, which are the degrees of blackness. The density, of course, the figure density is a logarithmic function—

XQ139. Don't get me mixed up. Can you tell me without doing that, what the difference be-
143 tween density and opacity is? A. I don't believe I can tell you without telling you the fact that the density is the logarithm of the opacity.

XQ140. What did you produce in this curve, Exhibit 15? What does it tell you different from Exhibit 14? A. Why, it does not tell me anything more, being familiar with the art, than the other curve does. It does indicate, though, the extent to which the high lights are given greater emphasis on the one film than on the other.

XQ141. That is with the one developer? A.
144 With the one developer over the other.

XQ142. Well, in both of these cases that you have been producing these charts about, you used the same time of development, did you not? A. That is correct.

XQ143. That means the same duration of the development? A. That is correct.

XQ144. Do you know what is meant by character of development or character of treatment, as distinguished from time? A. I don't believe I do know what you mean by that.

XQ145. Has that not got any regular definition, understood meaning in the art? A. I don't believe so.

XQ146. So if I spoke to you about the character of development or the character of treatment, you would not know what I meant? A. Not as far as the practical art is concerned, no, sir.

XQ147 Well, you may know something about the theoretical art. Would you know what I meant by character of treatment and character of development as distinguished from time? A. No, sir.

XQ148. Did you ever hear of a characteristic curve. A. Certainly.

XQ149. Are these exhibits 14 and 15 characteristic curves? A. They have been called that, yes, sir. 146

XQ150. Is that what you would call a characteristic curve? A. Yes, sir.

XQ151. In looking at Exhibit 14, are those two things you call curves, but which look to me like straight lines, are they not the same except that one is tipped more than the other? A. That is correct.

XQ152. In these two negatives that you produced, both of them using the same photographic material, but one developed with a positive developer and the other with a negative, do you know what the character of the resulting grain structure was in each? A. I have not made a microscopic inspection of it, but by looking at the negatives, it is apparent that there is a fine-grained structure in both of the pictures that were developed. 147

XQ153. That would indicate what? That the developers were the same character? A. Yes.

XQ154. When you were with the Fox Company, you spent most of your time with the newsreel crews? A. No, I did not say that. I did not as

148 *Louis B. Hoffmann—For Plaintiff—Cross.*

a matter of fact, spend most of my time with them.

I said I had some experience with the Fox Film development, that is the development of the pictures. As to the character of that development, as explained, my duties in the research and development division at various times gave me the supervision over the technical work that was being done in the film developing laboratories.

That was development of both negative emulsions and postive emulsions.

149 XQ160. And did you use there the same emulsion, that is the same developer, for the two? A. No, sir.

XQ161. You used a different developer for the positive emulsion than you used for the negative emulsion? A. That is correct.

XQ162. How did they differ? Did they differ like these developers you have been talking of here this morning, having the same ingredients in them, but different proportions? A. Yes, except that in the case of the positive developer, it was quite widely different from the so-called

150 sound developer that we are talking about here. That was from 1930 to 1932, while I was with the Fox Company.

It had a license from the Western Electric Company.

XQ166. In that work with those developers with the Fox Film, can you tell me what the gamma was that you used for the positive? A. In vicinity of the gamma of 2.

XQ167. And for the negative? A. .5 to .6.

XQ168. And the overall? A. It was slightly greater than unity.

XQ169. What do you mean by "slightly"? A.

I have not any exact figures here to indicate what the actual gamma was that was obtained. The only way to give a specific figure is to consider a particular strip of film on which the exposures have been made

XQ170. You said "slightly over unity". A. I mean from .1 to 1.2. (See correction pgs. 127-128.)

XQ171. Was that with a negative emulsion or positive emulsion on the sound record? A. Both. The experimental work, of course, was done with 152 the negative emulsion on the picture and the positive on the sound.

WILLIAM C. BALLARD, JR., called as witness on behalf of the plaintiff, having been duly sworn, testified as follows:

Direct Examination by Mr. Ward:

William C. Ballard, Jr., age 44; residence, Ith- 153 aca, New York; occupation, Professor of Electrical Engineering, Cornell University.

I was graduated in electrical engineering at Cornell in 1910, and was recalled to teach in the School of Electrical Engineering the following year. I have been continuously employed by the University up to the present time. During that time I have been granted a number of leaves of absence to enter into commercial work of one form or another, and in 1917 was granted a leave to act as engineer with the National Electric Signaling Company in Brooklyn, New York. In the latter part of the war I was recalled back to

154 *William C. Ballard, Jr.—For Plaintiff—Direct.*

Cornell to take technical charge of the School for Radio Electricians operated there by the U. S. Army. In 1923 I spent some months with the Westinghouse Electric & Manufacturing Company in the development of certain radio problems, and since that time I have been retained as consultant by the Westinghouse Company, the Atwater Kent Manufacturing Company, the National Carbon Company, the Grigsby-Grunow Company, and the Western Electric Company.

155 In 1926 I entered into a part time agreement with Mr. T. W. Case of Auburn, New York, to devote a considerable portion of my spare time to assisting him in the development of talking movies, which later merged into the Movietone system.

I hold membership in the American Institute of Electrical Engineers, the Institute of Radio Engineers, and one or two honorary fraternities. I have written a book on radio telephony which his been published through several editions and has been translated into one foreign language,

156 and as an occasional contributor to the technical press.

I appeared in a case involving this sound picture art before Judge Adkins in Washington, and another one before Judge Nields in Wilmington, Delaware, as an expert witness.

I was retained in another case heard before Judge Morris in the Delaware court, by the Western Electric Company.

All those suits were in connection with sound pictures.

Q6. Are you familiar or have you read and do you understand the statements of defendant's process as set forth in Exhibit 12 and the ac-

companying strips of film, Exhibit 12-A? A. Yes.

Q7. I show you a chart that is now on the easel, and I will ask you if in your opinion that chart, based on those statements, correctly represents the defendant's process, and if not, point out in what ways or details it does not? A. This chart does represent the defendant's process, as I understand it.

Q8. With the understanding that it is only diagrammatic? A. Diagrammatic, schematic.

Q9. It correctly represents it, as you understand it, to the extent of the details it goes into? 158
A. Yes, sir.

Mr. Ward: I offer in evidence, the chart last shown the witness.

(Marked Plaintiff's Exhibit 22 in evidence.)

Q10. I show you a diagrammatic chart which is now on the easel, and will ask you if you are familiar with that chart? A. I am.

Q11. Will you please state whether or not that 159
chart, to the extent that it shows the details, is a correct illustration of defendant's process, as you understand it from that statement tha I referred you to? A. It is.

Mr. Ward: I offer the second chart in evidence.

(Marked Plaintiff's Exhibit 23 in evidence.)

Q12. Professor, will you look over the caption or printing on that chart, Exhibit 22, and state

160 *William C. Ballard, Jr.—For Plaintiff—Direct.*

whether, in your opinion, they are correct as indicating defendant's process to the extent to which they do indicate it as you understand from those statements in Exhibit 12? A. They are substantially correct.

Q13. Are you familiar with the patent in suit? A. I am.

Q14. And have you read the original German and the translation of the German application, Serial No. V16431 V157a2 upon which the United
161 States application for the patent in suit was based as to priority? A. I have.

Mr. Ward: It is stipulated between counsel that the applicants in the case of the German application on which priority of the patent in suit is based are the same as the applicants in the U. S. application on which the patent in suit was issued, and that the same parties are applicants on the application on which French patent No. 532,750 was issued.

162 Mr. Neave: I agree to that.

Mr. Ward: If it was issued.

Q15. Professor, will you please take the patent in suit and explain it to the Court? A. The patent in suit refers to the production of speaking films in a manner in which the sound record and the picture record are so recorded as to make it possible for separate development and appropriate treatment should it be desired.

Referring to the chart, Exhibit 22, the picture record is impressed on one strip of negative film producing the latent image which is developed in an appropriate manner, and the photographic

sound record is recorded on another strip of film which may or may not be united during this process, and then passes through an appropriate developing process. Later these two strips of film are printed upon a single positive strip, which is later developed to produce the final product for reproduction in the usual type of talking picture reproducer.

Q16. Now will you go right through the specification from that point? A. Reading from the specification: "This invention relates to processes 164
for producing combined sound and motion picture films.

"In the production of speaking films it is of great advantage especially from the point of view of use, to arrange the sound sequence and the picture sequence upon one and the same piece of material (film).

"In this procedure, however, there frequently occur in consequence of the changing lighting conditions in the cinematographing process, changes in the degree of exposure of the silver bromide coating, and this causes the picture se- 165
quence to be either over exposed or under exposed.

"As the same film, however, carries close to the picture sequence the normally exposed sound sequence, these difficulties resulting from differences in exposure cannot be remedied in the case of combined negatives, by developing practices such as by weakening, strengthening, and so forth. They can only be remedied by subjecting the under exposed or the over exposed portions of the negative to separate appropriate treatments."

Q17. Will you explain to the Court there what the patentee is referring to by the under exposed

166 *William C. Ballard, Jr.—For Plaintiff—Direct.*

and over exposed portion of the negative? A. The under exposed or over exposed portion of the negative refers in this case to the portion of the negative devoted to the picture representation.

Q18. What is the system that the patentee is pointing to there, and which they are criticizing? A. That is the system in which the sound and picture images are made upon a single strip of sensitized film and developed simultaneously in the same bath without being subject to separa-
167 tion.

Q19. Such, for example, as the system diagrammatically shown on the chart which I show you? A. Yes.

The Court: In other words, to make possible the different development, they wanted to make them on different strips? That is what it means in substance, isn't it?

A. Yes.

Mr. Ward: I offer in evidence a photo-
168 static copy of the chart last shown the witness.

(Marked Plaintiff's Exhibit 24 in evidence.)

Q20. Now will you proceed, Professor? A. Continuing at line 31: "According to the present invention the difficulty is overcome by either employing entirely separate films," that is separate films are indicated on the chart at appropriate points, "for the simultaneous photographing of the sound and picture negatives, or films which are connected during the photographing, but

which are separated from one another before the developing, then separately developing the negatives if and in the manner required to remedy the difficulties, and then printing both sequences —picture and sound—on the different portions of the same positive film." I think this is evident from the chart.

"The synchronism is assured in both cases by the perforations and/or by corresponding marks."

The perforations are visible on the chart, and 170
the corresponding marks can be used to indicate the start of each of these corresponding two recordings.

"The production of the combined positive film can take place by copying the two negative films —sound and picture—preferably consecutively upon the same positive film." Then reference is made to the three figures in the drawings.

Fig. 1 shows the sound and picture recorded on two entirely separate films. Fig. 2 is a positive record made either from the representation of Fig. 1, or perhaps from Fig. 3. Fig. 3 shows a modified form of film in which the two records 171
are made upon the same strip of film and separated before development.

Q22. That is, Figs. 1 and 3 show the two forms of negatives that the patent discusses, and Fig. 2 shows a form of positive where they are printed on one film? A. That is true, and that can be checked by the representation of the picture record. It will be noted that in Fig. 1 and Fig. 3 the picture record is white in the lower right hand corner, which, of course, when printed, would give a black positive record, as indicated in Fig. 2.

"If for the record two separate films with

standard perforations are used two negatives are produced as shown in Fig. 1." This is also the case according to the representation on the chart. "The sound-record comprises the row of tones t, the picture record comprises the row of pictures b. The tone row is preferably arranged near one edge of the film. The two negatives are then copied on a single film, as shown in Fig. 2. If for the two records a common film is used, this has preferably the form shown in Fig. 3. This film comprises between two rows of perforations the
173 picture record b and the sound record t. Before the developing, the film is separated at p or at u." That refers to Fig. 3.

Q23. That is before the negatives are developed? A. That is before the negatives are developed. "If the sounds have to be recorded at the side of the picture record, outside one row of perforation, a film strip like the one shown in Fig. 2 is produced on which the picture record is between two rows of perforations whilst the sound record is arranged at one edge of the film strip,
174 outside the corresponding row of perforations."

Then an alternative way of printing is suggested. "One can, however, previous to the printing, unite longitudinally together the two developed negative films, and then copy this so united negative in the usual manner." This method is not indicated on the chart.

"Other benefits may also be derived from the broader aspects of the invention, i. e., from employing separate or separable film areas for the recording of the sound and picture negatives, and then printing both the sound and picture sequences on different portions of the same positive film.

"In the following claims where reference is made to a 'length of film' upon which a sound record is recorded, such 'length of film' shall be interpreted as referring to a strip of film which may be either entirely separate from or merely separable from the film strip carrying the picture sequence.

"While the invention has been described in detail with respect to certain particular preferred examples thereof which give satisfactory results, it will be understood by those skilled in the art 176 after understanding the invention, that various changes and modifications may be made without departing from the spirit and scope of the invention and it is intended therefore in the appended claims, to cover all such changes and modifications."

Q24. Now will you refer to the translation of the German application and to a copy of the United States patent application as filed, and state whether you find any substantial or material differences in the two documents? A. I find no such substantial or material differences between these two documents. 177

Q25. Will you please take either one of these specifications, suppose you take the German, being the earliest, and explain that to the Court? A. Shall I read this through, pointing out the similarities in the same manner as the United States patent?

Q26. Yes, please. A. I am now reading from the translation of the German application as filed. "In the production of talking films it is of great advantage, particularly for operating reasons, to fix the sound series and the picture series upon one common material carrier (film)." That

178 *William C. Ballard, Jr.—For Plaintiff—Direct.*

is illustrated at the lower edge of this chart. (Exhibit No. 22.) "In this process, however, in consequence of varying lighting conditions in connection with cinematographic picture recording, differences frequently occur in the degree of illumination of the silver bromide layer with the result that the picture series is overexposed or underexposed. But, since the same film also carries the always normally illuminated sound series close to the picture-series, these differences,
179 in combined negatives, cannot be compensated for by developing, toning down, intensifying, etc.

In other words, if the negative record is made as indicated by the sketch near the bottom end of the chart, it is impossible or extremely difficult to develop one series without developing the other one at the same time.

"They can only be eliminated if the underexposed and overexposed portions of the negative are subjected to a separate, suitably adapted treatment.

Technically this is practically impossible as
180 long as the two series of events are on the same film."

I think this last statement is obvious.

"According to this invention this difficulty is obviated in that for the production of the negatives, either entirely separate films are provided or those which although still united during the recording are, however, detached from each other before the developing. Synchronism in both cases is insured by the perforations and by corresponding marks. The production of the positive film"—

Q27. Will you point out just what that means, "Synchronism in both cases"? A. Synchronism in both cases, referring to the two suggested pro-

cedures, one of which involves two entirely separate films and the other of which involves a film which is originally joined but later separated after exposure—synchronism is insured by the perforations of the two separate films in that they are driven through the two cameras at the same speed and corresponding marks would refer to marks made on the film indicating the starting point of the exposure on both sound and picture films.

The next paragraph refers to the printing of 182
these two films upon a single positive film:

"The production of the positive films can be accomplished by having the two negative films, preferably one after the other, copied onto the same positive film. However, the two negatives can be previously pasted together in the lengthwise direction and the combined negative thus obtained copied in the usual manner."

Q28. When the films, the negatives are thus copied, what will be the relation of the picture and sound on the composite positive? A. They will occupy different lengthwise-extending portions of the positive film near one another. 183

Q29. Referring to the old method, the one which the present case refers to in the specification, have you any prior art patents or prior filed applications which illustrate that system? A. There are a number of patent applications illustrating the method of recording sound and picture on the same film strip simultaneously. Perhaps the earliest is disclosed in the British patent to Haines, No. 18,057, of 1906.

The Witness: French patent to Canton, No. 459,537; United States patent to Ries, No. 1,473,976—

184 *William C. Ballard, Jr.—For Plaintiff—Direct.*

Mr. Ward: I offer copy of the United States patent to Ries, No. 1,473,976, referred to by the witness.

(Marked Plaintiff's Exhibit 25 in evidence.)

The Witness: Also French patent No. 448,757 to MacCarty of 1912.

Mr. Ward: I offer in evidence photostatic copy and translation of said MacCarty patent.

185 (Marked Plaintiff's Exhibit 26 in evidence.)

The Witness: There are others. Also United States Patent, No. 1,186,717 to Walker. Also British patent No. 157,433, of 1922 to Vogt.

Mr. Ward: I offer the last-mentioned patent in evidence as Plaintiff's Exhibit 27.

(Marked Plaintiff's Exhibit 27 in evidence.)

Q33. Now, will you point out to the Court the 186 similarity in the patentee's method or process and that of the defendant, using this chart for illustration, this chart, Exhibit 22? A. The patentee proposes to employ two entirely separate films, according to the specification, beginning line 31. These two films are represented on the chart and are labeled "Exposed Motion Picture negative Film" and "Exposed Sound Negative Film."

The patentee describes the desirable condition of developing these two films separately according to the requirements of each which is assumed to be done by the step indicated as the developing machines respectively for sound and picture stock.

The production of the combined positive film can take place by copying the two negative films. This step is indicated in the rectangle, although no details are shown, it being well-known in the art how to accomplish this, and producing the combined sound and picture positive film which is later developed and finished, these two records being printed upon the same strip of positive film.

Q34. Now, what have you to say with respect to the separate developments of the sound and picture of the defendants, being in a manner ap- 188
propriate or suitable for each, having reference to the defendant's statement Exhibit 12 and film Exhibit 12-a, for such information as you wish to give on the subject?

The Court: Before you refer to the chart, that is exhibit number what?

Mr. Ward: 22.

A. I find in paragraph 8, the statement made, paragraph 8 of the second section of Exhibit 12, the statement made that "The overall gamma of 189
the picture record is substantially 1.2 and the overall gamma of the sound record is substantially 1.0."

The overall gamma of any combined positive and negative process is found by multiplying the gamma of the positive and the gamma of the negative process together. So that if the overall gamma of the picture is substantially 1.2 and the overall gamma of the sound record is substantially 1.0, and from the obvious condition that the gamma of the positive record must be the same because they are printed upon the same stock and

190 *William C. Ballard, Jr.—For Plaintiff—Direct.*

developed in the same bath for the same length of time, we can see that there must be at least a 20 per cent. difference in the negative gamma of the sound film and that of the motion picture film. Two quantities multiplied by the same quantity producing products that are different by 20 per cent. must originally differ by 20 per cent. themselves.

Q35. Now, according to the statement of the defendant, which you have been referred to, what
191 do you find the relative time of the action of the developer on the film to be, that is, with respect to the sound negative and picture negative? A. Paragraph 7 states that: "The time of development of the picture negative is between 9 and 12 minutes, and the time of development of the sound negative is between 4 and 5 minutes."

Q36. What is the temperature in each case? A. The temperature in each case is maintained at 65 degrees Fahrenheit, and this applies to both sound and picture developing.

Q37. Do you also find from the statement that the defendant's sound negative is made on so-
192 called positive stock? A. That is so.

Q38. Whereas the defendant's picture negative is made on so-called negative stock? A. Right.

Q39. Can you state which of those stocks were developed—or state what would be the action of, say, a given developer, on those two stocks? A. Not having the exact charactertistics of those stocks given, it is difficult to answer that question, but in general the developer for negative stock and the developer for so-called sound positive stock is quite different, and the same developer would, in all probability, have different effects upon these two stocks. That is the general propo-

sition, with respect to positive and negative stocks, developed, say, in the same developer.

Q42. If you used the same developer that the defendant uses for "picture negative stock," and utilized the same time and temperature, and put the positive stock, carrying the sound record through there, along with their picture negative, can you state in a general way what the result would be? A. Since the positive stock in general develops more rapidly, it would probably result in a sound track that would be too dense, if the 194
time and developer were the same in either case.

Q43. In your opinion, from what you know of the defendant's process, by these statements and the data that you have referred to, would you say that their picture and sound negatives are separately developed in a manner appropriate for each or in a manner not appropriate for each? A. I would say that they are separately developed in a manner appropriate for each.

Q44. Can you state in a general way to what extent this method of the patent in suit described in the chart here, chart No. 22, has gone into commercial use, do you know? A. It is my under- 195
standing that nearly all of the large companies employ this method of recording on separate films and printing together on a single positive in at least a part of their production; that its use is very widespread.

Q45. What about the separate development of the two films? A. Which would include the separate development of these two films.

Q46. Have you seen the plaintiff's Exhibits 13, 14, 15 and 16 introduced through the witness Hoffmann (handing to witness)? A. I have.

Q47. Will you please take Exhibit 19, and point

196 *William C. Ballard, Jr.—For Plaintiff—Direct.*

out to the Court, what, if any, differences you observe in those two pictures on that exhibit? A. I note that the dark portions of these two pictures have nowheres the difference in density that the lighter portions have and that there is a marked difference in the degree of distinctness with which the characteristic weave of the girl's sweater can be seen in these two pictures, this being perhaps the lightest portion of the two pictures. The upper picture has less contrast than
197 the lower picture, and would be defined as being a softer picture, while the lower picture is characterized as a harsher picture.

Q48. Which of the two is the better picture, from the standpoint of motion picture practice? A. I would rather hesitate to say because there are various demands in projection which might make one the better and might make the other the better. It depends on the final result that you desire to obtain.

Q49. Explain what you mean. A. In general, for motion picture projection, it is desirable to
198 have a positive film of considerably higher contrast than that which actually existed in the object photographed in order to produce the requisite brillancy on the screen.

Q50. Now, will you refer to the curves on the other two exhibits you have, which are 14 and 15, and state whether those curves are in general in accordance with the results on those pictures? A. They are.

Q51. From the results on those curves and the results on the pictures, would you say that the defendant's picture developer and the defendant's sound developer are the same or different? A. They are different.

Q52. Mr. Neave, in his opening remarks, made some reference to the large number of lines that were photographed on the sound record, using defendant's so-called light valve recording apparatus as contrasted to the plaintiff's glow lamp for the purpose of recording. Can you state whether or not there is any characteristic difference in the number of light lines that would be recorded in a given time by one of those methods or the other? A. Either system is probably accurate enough to record most of the frequencies encountered in normal sound. There is a somewhat well-defined upper limit beyond which the Western Electric system refuses to operate, whereas no such well-defined limit exists in the case of the glow light. The upper limit of the Western Electric system is a sufficiently beyond the usable range so that it makes little difference.

Q53. For what value it may have, you do not agree with him then that the light valve system records any more of these lines per unit of time than the glow lamp system? A. No; quite the contrary, as far as ultimate possibility is concerned; the range is higher with the glow light 201
than it is with the Western Electric light valve.

Q54. Will you refer again to the specification of the patent in suit, if you haven't already covered this point, Professor, and explain to the Court briefly what is meant there at line- 16 to 18 with regard to the normally exposed sound sequence, having reference to the light for recording? A. In the Western Electric light valve system an incandescent lamp is normally the source of light for sound recording, and this incandescent lamp is maintained at a constant brillancy, this giving what might be called a nor-

202 *William C. Ballard, Jr.—For Plaintiff—Direct.*

mal exposure except when the light valve is in operation. And the same thing is true in general terms when the glow light is used, the current passing through the glow light does not vary except when sound is to be recorded.

Q55. That is, in both cases the amount of light passing through from the lamp to the sensitized surface is substantially steady, and it is fluctuated on each side of a horizontal line responsive to the sound vibrations? A. That is correct.

203 Q56. Are you familiar with the patent of Lee DeForest No. 1,489,314, which was involved in the interference that I referred to in my opening this morning? A. Yes.

Q57. Will you state briefly what is the object of the invention set forth in that specification, and in connection with it point out whether there is any reference to separate development as an object of the invention? A. This patent discloses a method by which a sound record may be transferred onto the edge of a positive picture record by optical means, being reduced in extent at the

204 same time. There is no mention in this patent of separate development or of the advantages of separate development.

Q58. Does this patent say anything with regard to any theory of over-exposure or under-exposure of the picture with respect to the sound? A. I see no such statement.

Q59. Do you find any other object suggested or set forth in the patent other than that of being able to get an enlarged sound track, and then rephotograph that onto the film with the picture record, or of being able to split the sound record and put part of it on one side of the picture and part on the other side? A. This seems to be the principal object to be attained in this patent.

Cross Examination by Mr. Neave:

XQ60. A few minutes ago Mr. Ward asked you about the extent of use of what he said was the process of the patent in suit, and that is to photograph the sound on a different negative than that on which the pictures are photographed, and you made some answer as to your understanding. What do you know actually of the extent of the use of that process? A. Only by hearsay evidence.

XQ61. By the same evidence you know of many 206
instances on which they photograph on the same negative both the sound and the picture? A. I have heard that that is being done at the present time; not to the extent that the other system is being used.

XQ62. But your knowledge, you have no knowledge on either piont, have you? A. Well, I have never been employed by these concerns to learn their processes.

XQ63. Then, Mr. Ward, after asking you those questions, asked whether that included separate development of these two films, and you said that, 207
it necessarily did? A. If you will define what you mean by "that."

XQ64. What did you mean by saying whatever you had said before? I do not know what it was involved the separate development of the films. May I ask you this: Do you understand that these people who have these two negatives, simultaneous negatives, one for the sound and one for the picture, do all of them develop separately? A. I understand that they do.

XQ65. And that is necessarily true because they have separate negatives, isn't it? A. Not

necessarily true, no, sir. Under some special conditions they might be run through the same bath and joined together. That might be done; I have no knowledge that it is done.

XQ66. You also spoke of the use of the glow lamp and the light valve. Do you understand the glow lamp is ever used nowadays? A. I understand it is, but not always.

XQ68. Do you know that the Western Electric light valve does not use a glow lamp? A.
209 I do.

XQ69. Don't you know that it is the principal thing used today, don't you know that? A. I wouldn't say that, because I do not know to what extent the Western Electric system and the R. C. A. Photophone system are in use today. The Western Electric system employs a light valve, and the R. C. A. Photophone system does not employ a light valve.

XQ70. Do they employ the glow lamp? A. No, they have a galvanometer movement, they do not use the glow lamp. I understand there is
210 some work going on on the glow lamp among independent manufacturers on the west coast today, not experimental work, regular photographs. I know at one time most of the Fox movietone newsreels were made by the glow lamp.

XQ75. You know they abandoned the glow lamp and took up the Western Electric light valve? A. Not for news pictures; I have no such knowledge.

XQ76. You know that they are using the light valve, don't you? A. They are using the light valve for studio work, I understand.

XQ77. And you know they are using the light valve for their modern pictures? A. For their studio pictures, I understand that is the case.

XQ78. You didn't mean to say a moment ago that a normal exposure was not attained with the Western Electric light valve, did you? You get a perfectly normal exposure with that, don't you? A. I do not remember having said that, Mr. Neave.

XQ79. However, you do get a normal exposure, don't you, with the Western Electric 212
light valve? A. Well, the exposure can be adjusted over quite a wide range, by adjusting the intensity of the light. And there should be no difficulty in getting a normal exposure if you so desire.

XQ80. And the glow tube is an under-exposure, isn't it? A. Not at all times.

XQ81. It does wobble down into the under-exposure range, doesn't it? A. You will have to define "under-exposure," Mr. Neave.

XQ82. Then I will have to get technical. It works on the toe end of the curve? A. Yes, 213
the toe is quite satisfactory in many cases.

XQ83. That gives you wrong values, and then you do something afterwards to compensate for the wrong values? A. Oh, no, not at all.

XQ84. If you work on the toe of the curve, unless you take certain precautions, you get an erroneous value, don't you? A. That is merely a question of percentage of erroneous value; it might be slightly higher under different conditions, but by a proper selecting of the point on the curve it might be quite close to correct conditions.

214 *William C. Ballard, Jr.—For Plaintiff—Cross.*

XQ85. You were testifying from the chart, Plaintiff's Exhibit 22, and on that chart it is noted that the sound negative film as shown is positive stock, and the picture negative film as shown is negative stock. What is the difference between positive stock and negative stock? A. The difference in the—I can tell you only by results. The negative stock in general gives greater grainness, less resolution, and the positive stock more resolution. Resolution is tied
215 up very intimately with the size of grains of silver material.

XQ86. Suppose you have large grains, then you have large resolution? A. No; small grains give you large resolution.

XQ87. What do you mean by "resolution"? A. Resolution is in general reciprocally related to the size of grain, silver grain.

XQ88. What is it that is related? Is it the smell of the thing or the color? A. The value of the resolution.

XQ89. What is "resolution"? A. Resolution
216 is a quality which is concerned with the size of the reduced silver grain on the photographic image.

XQ90. If you get a reduced silver grain you get better resolution? A. The smaller size the silver grains, the better the resolution.

XQ91. Having better resolution you have better what? A. With smaller grains you get a better definition.

XQ92. You mean you get a narrower line, a sharper, narrower line of striation, is that what you mean? What do you mean by "resolution"? A. I do not think the size of the grain,

once they are down to normal size, makes very much difference, as far as that is concerned. The difference is in the character of sound that is produced, because you have less extraneous background noise produced with the high resolution sound emulsion.

XQ93. But when you have a smaller grain you say you have higher resolution. Having a smaller grain, what is the advantage? A. Less background, less extraneous noise.

XQ94. Less background noise? A. Yes, for one thing. 218

XQ95. Is that all you mean by "resolution"? A. I think as far as it applies to sound records, that covers the situation pretty well.

XQ96. Then the resolution has nothing to do with frequencies, has it? A. I think on the film used today it has very little to do with frequencies.

XQ97. What do you mean by that? A. Well, that the size of the grain, either the coarse grain stock or fine grain stock, is so much smaller than the narrowest line that is reproducing the sound, that the dimensions are not comparable with one another at all. 219

XQ98. Why is it if you know that the defendant uses a positive stock for its sound film and a negative stock for its negative film? A. The question is why is it that I know?

XQ99. Yes. A. Because it is so stipulated.

XQ100. Do you know why they do this? A. It is because it is so stipulated.

XQ101. Do you know why they use a positive stock for the negative sound film? A. No, I do not know why they do it.

220 *William C. Ballard, Jr.—For Plaintiff—Cross.*

XQ102. You do not know why they use a negative stock for the negative picture film? A. I can surmise that it is due to the fact that the negative stock, having more rapid photographic action, is a better suited structure for pictures.

XQ103. Why? Isn't the recorded sound just as rapid as the recorded picture? A. It does not require the degree of light.

XQ104. It does not require the degree of light? A. The sound does not.

221 XQ105. You do not have as much light on the sound record as the picture record? A. The amount of light on the sound record may be adjusted within very wide limits by adjusting the brilliancy of the lamp, and it is an easy job to adjust the light with the Western Electric light valve for using the positive stock, and you get a less time for development of the stock, while that would be somewhat difficult in the case of picture records.

XQ106. Why wouldn't the defendant be just as happy if he would use negative stock for both
222 the sound film and for the picture film? A. I cannot answer that question.

XQ107. Do you know what the relative scope of the positive and negative stock is? A. I have nothing special on that.

XQ108. Then how can you tell what the action would be in different developers on the positive and negative stock? A. I am assuming the positive stock requires, and defendant has so stated, that with two developers having somewhat similar characteristics, but still they do differ in that the difference in time required is better than a ratio of 2 to 1.

XQ109. And therefore what? A. I am assuming that the positive stock then takes a shorter period of development time than the negative stock.

XQ110. But they are using different developers? A. No, with the same developer.

XQ111. They do use different developers on the positive and negative stock, do they not? A. That is true.

XQ112. And they use different times for the different developers? A. That is true.

XQ113. What is gamma? You were talking 224
about gamma a few moments ago; what is gamma? A. Do you want me to go through a technical explanation of it?

XQ114. No; I want to know what your answer meant. Mr. Ward asked you a question, and you said according to the stipulation the gamma was of such-and-such a value in one case, and such-and-such a value in the other case, which seemed to me to have no reference to the question asked. Now, gammas may mean something, or else you could get no such in- 225
formation from them. What did you mean by referring to gammas? A. If the log of exposure is plotted against the consequent density, the slope of the curve plotted is the gamma of the operation.

XQ115. What has that slope of the curve got to do with anything Mr. Ward asked you when you referred to the stipulation, Exhibit 12-A, talking about gamma? A. The effect of a high gamma is to produce an abnormal contrast, and a low gamma is to produce sub-normal contrast.

XQ116. Has that got anything to do with

these developers you were talking about? A. I think in general it has, yes.

XQ117. In what connection was it? A. I haven't the record here. In what connection was it you did refer to 12-A and talk about the gamma, what was the question that was asked you, do you remember? A. You will have to refer to the record.

XQ118. You pointed out that the over-all gamma was different for the two negative films. What difference does it make if the over-all
227 gamma is different? A. It indicates that the two negative films are developed to a different degree of contrast.

XQ119. So that they were different emulsions to start with? A. Well, that makes no difference if they were different emulsions. Gamma is the combined effect of the developer and the emulsion.

XQ120. Now, you refer to the patent in suit at line 18, and you will find the words "these difficulties." What do you understand those difficulties to be that are referred to there? A.
228 I do not follow you.

XQ121. Line 18. A. The under or over exposure of the picture sequence.

XQ122. Well, now, line 18 proceeds to say: "these difficulties resulting from differences in exposure," so the difficulties aren't the differences in exposure, are they? A. Yes.

XQ123. The difficulties are the differences in exposure? A. The differences in exposure of the picture sequence.

XQ124. Are the difficulties? A. I do not exactly get your question.

XQ125. I understood you to say that the difficulties were differences in exposure. A. Yes.

XQ126. There isn't any difficulty in getting a difference in exposure, is there? A. I do not think that we define the word "difference" in that case. "Difference" may relate to the fact that the picture record is over-exposed with respect to the sound record, or it may be under-exposed with reference to the sound record. The under-exposure and the over-exposure, I take it, are comparative terms, and there must be some normal point from which to work. 230

XQ127. "These difficulties resulting from differences in exposure"—let me ask you again what the difficulties are? A. Due to the under-exposure or over-exposure of the picture sequence.

XQ128. What is the difficulty that is produced by the under-exposure or over-exposure? A. The necessity for separate development in order—

XQ129. Separate development of what? A. Of the correctly exposed portion and the incorrectly exposed portion. 231

XQ130. The correctly exposed portion is the sound, and the incorrectly exposed portion is the picture film? A. I think that is a fair statement.

XQ131. Look at line 31, it is line 32, I think: "The difficulty is overcome," the word "difficulty" is used again. What is that difficulty in line 32? A. The difficulty of producing an acceptable positive film by the old former method.

XQ132. Former method was taking both the

232 *William C. Ballard, Jr.—For Plaintiff—Cross.*

sound and the picture on the same negative? A. On the same negative.

XQ133. This difficulty is overcome how, the difficulty at line 33, it is overcome by the separate development of the two films, isn't it; is that right? A. I think so.

XQ134. Then let us look down a little further, at line 39: "Then separately developing the negative if * * * required to remedy the difficulties." According to the specification up to that point the difficulties are remedied only
233 by separate development, aren't they? A. If and when required.

XQ135. No, up to that point, the difficulties are remedied only by separate development? A. If such difficulties exist, yes.

XQ136. Up to line 39, the difficulties were necessary, weren't they, according to the statement? Look at line 18, you will see these difficulties resulting from different exposure cannot be remedied in the case of combined negatives by development together and so forth, and then line 27, "Technically, this treatment is
234 practically impossible so long as the two sequences—picture and sound—are photographed upon the same film strip." So the specifications there say, do they not, that you must get two negatives on two different strips so that they may be separately developed, and that is the only way of remedying the difficulty, isn't that true? A. According to the description of this patent, yes.

XQ137. But when you got to line 40 which says: "Then separately developing the negative if * * * required to remedy the difficul-

ties"? That is the first intimation there, isn't it, that it isn't absolutely essential in all cases to separately develop in order to remedy the difficulties? A. I think there might be a hypothetical condition where due to some special emulsion or some special treatment, this separarate development might be dispensed with, I do not know of any practical condition like that.

XQ138. Let us assume that is true, let us get back to my question. This is the first point in the specification that there is any intimation of anything of that sort? A. Yes, I think that 236
is a fair statement.

XQ139. You find no such intimation in the German application, do you? A. Those words were inserted, I think, later—I beg your pardon, I understand—

XQ140. Beg pardon? A. I understand that does not appear in the German application. I do not see those words.

XQ141. I want you not only to explain whether those words are in the German application but whether there is anything in the German application that even intimates that? A. I should 237
think it would be quite obvious to one in the art if special conditions would not require a separate development, then you would develop it in the same developer at the same time.

XQ142. Does the German specification say that the only way to cure the difficulty is to have a separate development? A. Yes, but if you do not have the difficulties why try to cure them by separate development.

XQ143. Is this patent treating with these special conditions? A. The patent is dealing with the way to overcome difficulties.

238 *William C. Ballard, Jr.—For Plaintiff—Cross.*

XQ144. And the only way to overcome these difficulties is by having a separate development, that is the disclosure in the German application, is it not? A. Yes.

XQ145. Look at the patent in suit and look at line 83. That line begins with the words "Other benefits". Up to that point what had been the benefits derived from the invention as set forth? A. Production of an accurate positive with regard to sound and picture.

XQ146. Go on, at line 83, read that whole
239 paragraph beginning there and tell me what the other benefits are that were referred to in this paragraph. A. What other benefit may be derived, is that the question?

XQ147. Yes, what other benefits that are referred to there in that paragraph? It says, "other benefits may also be derived." What are those other benefits? A. May use different quality of recording stock, may be able to take several picture records simultaneously of a single action, several sound records of a single action.

240 XQ148. Do you find anything in the German application corresponding to the paragraph beginning on line 83 of the patent? A. Other benefits? I do not find that in the German application.

XQ149. Now, as I understand it, you have testified in answer to questions by Mr. Ward, with reference to certain British and French patents that at the time that these Vogt and others, made their alleged invention, there was nothing new in having the sound record and the picture record on the same film, that is true? A. On the same positive film.

XQ150. And there was nothing new in having the sound record with picture record on the same negative film, was there? A. That is true.

XQ151. And there was nothing new in photographing the sound record and the picture record simultaneously on the same negative film? A. That is true.

XQ152. And there was nothing new in transferring those negatives to a positive film, was there? A. No.

XQ153. And there was nothing new at the time when these patentees made their alleged in- 242
vention to photograph simultaneously the sound record on one film and the picture record on another film? A. It was proposed in the art, yes.

XQ154. But there was nothing new in separately developing those separate negatives, was there? A. No.

XQ155. And there was nothing new in thereafter uniting them on one positive film, was there? A. I find no reference about uniting these two records on a single positive film in the prior art. 243

XQ156. You find a lot of prior art where there were two negatives that were combined on one positive? A. Not two separate negatives combined on one positive.

XQ157. I am sure you must. Craig did that, did he not? A. Not in the manner shown on the chart, I will state that—

XQ158. I am not talking about details. Craig did have a negative for the sound, and a separate negative for the picture? A. Yes, that is right.

XQ159. And he put them both on the same positive film? A. I don't know whether he ever did.

XQ160. He described it. A. Yes, he would like to do it.

XQ161. So that there was nothing new in that at the time when Vogt came along? A. I can not say that, because I don't think it ever had been done.

XQ162. There was nothing new in the knowledge of having that done? A. In the knowledge
245 of putting it on opposite sides of the film, the desirability.

XQ163. Putting them on the same positive film, because Craig had done it on opposite sides, but they were on the same film, were they not? A. Yes, I think that is a fair statement but not on the same side or side by side.

XQ164. Then tell me what you think is disclosed in this patent in suit that is new? A. I find no reference whatsoever in the prior art to any system which employs two separate negatives, sound and picture records, develops sepa-
246 rately, and prints them in the usual manner on a single positive film.

XQ165. What do you mean by "usual manner"? A. The manner described by the inventors and the manner in use, in general use at that time.

XQ166. The inventors describes two manners, one printing them consecutively and one printing them simultaneously, do they not? A. With the same final result, of course.

XQ167. Then what is new that you do not find in the prior art, that you think is new here,

is printing both the separately exposed, separately developed negatives side by side on the same side of the positive film, is that what you mean? A. I think that is a fair statement.

XQ168. Of course, you know that it was old and well-known to have both the picture sequence and the sound sequence printed side by side on a positive film, you know that, do you not? A. Yes.

XQ169. You are familiar with the Bullis patent that was cited in the file wrapper of these 248
cases, the Bullis prior patent? A. Which patent is that?

XQ171. Bullis, No. 1,335,651. A. Yes, I have got it.

XQ172. There the sound was photographed on one negative and the pictures were photographed on a separate negative? A. Yes.

XQ173. And then those separate negatives were separately developed? A. Yes.

XQ174. And then they were brought together into one positive? A. No, I find no reference to that in the Bullis patent. I find nothing but a 249
complete separate treatment throughout with two separate positives produced.

XQ175. Two strips of positive were brought together to form one film? A. I should not think that two films of positive glued together would constitute a single film.

XQ176. And you would say it was old to put the sound record beside the picture record on a single film, was it not? A. Yes.

Cross Examination (Continued) by Mr. Neaves

The Witness: In reading the last question and the next to the last question, in which Mr.

Neave was questioning me in regard to the Bullis patent, I find that at XQ175, he asked me: "Two strips of positive were brought together to form one film", referring to the Bullis disclosure, as I understood it, and I answered, "I should not think that two films of positive glued together would constitute a single film." Then he further questioned me: "Then you would say it was old to put the sound record beside the picture record on a single film, was it not?" I then did not understand that Mr. Neave was continuing his questions in regard to the Bullis patent. If I had I would have, of course, answered that "No", because I think it is quite evident from the previous question, and it was answered "Yes," only with the understanding that it referred back to the old time system of recording a positive and negative on a single film.

By Mr. Neave:

XQ177. That was my understanding, Mr. Ballard, and that "then" in XQ176 should have been "and," and was not intentional, and I have changed it in my copy. That last question was not a continuation of the Bullis discussion, but it was old, was it not, to have the sound, that is, old prior to the alleged invention of these patentees here, to have the sound record beside the picture record on a single film? A. In the form of a positive or in the form of a negative?

XQ178. In the form of a positive? A. Yes, that is disclosed in the prior art in connection

with the single film system, in which the positive and negative records are both made on a single film.

XQ179. But my point was that it was old to have a positive which held both the sound record and the picture record, and the two were longitudinally aligned on the same positive film? A. Yes, it was old but it was not disclosed by Bullis.

XQ180. Bullis recorded in synchronism, didn't he? That is, the sound and the pictures were 254 recorded synchronously with each other?

XQ181. Do you remember the Walker patent that you referred to? A. Yes, sir.

XQ182. The two negatives, one for the sound and one for the picture, are printed on the same positive film, are they not? A. I understand the sound and picture to be recorded upon the same strip of film.

XQ183. That is negative or positive? A. Negative.

XQ184. I am asking you now about printing the positive. A. The single strip of film was 255 printed on a single positive strip of film.

XQ185. Were not the two printed separately, that is, was not the picture negative put on the positive film separate from the sound negative? A. On different longitudinally extending portions, that is true.

XQ186. And put on at different times? A. At different times.

XQ187. You are in charge of the Department of Communication engineering, at Cornell, as I understand. Your real field is radio and similar matters rather than photography, is it not?

256 *William C. Ballard, Jr.—For Plaintiff—Cross.*

A. I would not say that, sir. We have during the last few years treated on the subject of sound motion pictures and their technical aspects in connection with this course.

XQ188. Sound motion pictures, yes, but in the photography in connection with sound motion pictures? A. Photography is handled in a different department, sir.

XQ189. That is not in the Department of Communications Engineering? A. Quite true.

257 XQ190. You testified yesterday on page 134, if you want to refer to it in your testimony, with reference to Exhibit 22, that is, the large chart, that it was well-known in the art how to accomplish the step of the patent of copying the two negatives onto one positive film. That has been done innumerable times in the motion picture art, has it not, for printing titles, combining two scenes, and so forth? A. If the desired result is known, there should be not a great deal of difficulty in producing that result.

XQ191. And does the defendant, in printing
258 the two negatives on the same positive film, use anything that was not known long prior to the invention we are talking about here? A. Not having knowledge of the defendant's process other than in the stipulation, I am unable to answer that question in detail.

XQ192. So it is immaterial to you, for the purposes of your argument, whether or not they used what was old or what was new in putting those two things together? A. I can only refer to the defendant's stipulation. I will be very glad to read that.

XQ193. It is not necessary to read that, but

you know of nothing new that the defendant is doing in printing the two negatives on the one positive? A. As far as my knowledge goes—

Mr. Ward: I object unless Mr. Neave makes his question clear whether he is referring to the process or just some machinery for printing this step of the process.

The Court: The witness evidently understood him. He answered it. 260

XQ194. Look at Fig. 2 of the patent in suit. Does that show a film which can be reproduced in a standard projector? A. I am at a loss to know what you mean, Mr. Neave, by "standard projector." Standard projectors, as I understand, have no sound attachment to them.

XQ 195. Standard sound film projector, standard sound and picture projector. A. It would be not very difficult to construct a projector to hande a film of this character.

XQ196. Of course, but the standard projector 261
is not so constructed, is it? A. You will have to define what you mean by "standard projector." If it is one manufactured by the Western Electric Company and in use today, that would be one thing.

XQ197. Do you know of any projector in use today that would take that film in Fig. 2?

Mr. Ward: I object unless Mr. Neave has his questions limited to whether he is talking about a standard projector today or a so-called standard projector as of the date of this patent. There was

262 *William C. Ballard, Jr.—For Plaintiff—Cross.*

none at the time of this application, as far as I know.

XQ198. How long have you been familiar with projectors for sound and motion cameras, sound and picture cameras? A. Since about 1922 or 1923.

XQ199. Have you ever seen a projector which would take that film of Fig. 2 of the patent in suit? A. I have a reproducing equipment in my
263 own laboratory that will do it, yes, sir.

XQ200. And where did you get that? A. Made specially in the early days.

XQ201. So it is only a specially made piece of apparatus that will take that film of Fig. 2 of the patent in suit? A. This apparatus was made before the introduction of the so-called standard projectors.

XQ202. So there are standard projectors, are there? A. I say your standard, the Western Electric standard projector.

XQ203. Do you know of any projector except
264 that experimental one in your laboratory that would take that film of Fig. 2 of the patent in suit? A. I have no direct knowledge of any other projector of that character.

XQ204. Do you find in the original specification of the patent in suit as filed any statement that the sound recorded has slight or otherwise varying differences in tone and intensity? A. I find that the patent refers to the production of speaking films and in order to reproduce or record speech, such slight differences of tone and intensity are, of course, essential.

XQ205. And that is pointed out in the pat-

ent? A. That is pointed out in the third line of the patent "in the production of speaking films."

XQ206. And you read it all from that? A. Not necessarily. There are other places where the character of the record is referred to.

XQ207. Do you find in the original specification as filed any statement that the sound and picture records are both printed on the same side or face of the final positive film? A. I find that by inference, sir. 266

XQ208. What do you get the inference from? A. From line 79: "One can, however, previous to the printing, unite longitudinally together the two developed negative films and then copy this so united negative film in the usual manner." The usual manner was to print the sound record and picture record on different longitudinally exposed portions of the film.

XQ209. It was usual in the prior art to print them on the same side of the same film? A. In connection with the single film system, it was.

XQ210. Do you find any statement in the 267 specification as filed that the coating of the film is all of the same character? A. Except by inference, the reference to the statement made in line 79, in which reference is made to the copying of the so united negative in the usual manner. This process, as was well known, utilized in the usual embodiment of the process, a single sensitized film was used with the records longitudinally spaced.

XQ211. The positive film of Fig. 2 of the patent in suit is a combination or composite print, is it not? A. It is made by exposing the

positive film to the negative picture record and negative sound record.

XQ212. That is what is called a composite print, is it not? A. I don't think the term is particularly applicable in this case.

XQ213. Have you ever heard the term "composite print" in connection with photography? A. Yes.

XQ214. What do you understand is meant by it? A. A composite photograph usually repre-
269 sents an exposure produced by printing, superposing on the same space of film, a number of negative exposures.

XQ215. And you know it only in that connection? A. For the moment, yes.

XQ216. You have referred in your testimony to having previously testified in a talking motion picture case before Judge Nields in Delaware. That was the case of American Tri-Ergon vs. General Talking Pictures, was it not, and it was a 4915 suit on the glow tubes? A. Yes, sir.

270 XQ217. I see that you stated there in cross examination that your association with Mr. Case, which was your first contact with talking movies—what you stated was this: "My particular association was in connection with problems in amplification. That was the principal connection, although I did have opportunity to discuss with him various types of recording lights." That was true, was it not, that was the nature of your association with Mr. Case? A. Yes.

XQ218. Did Mr. Case and his organization or you yourself give any considerable study to

photographic emulsions, developers, and so forth before 1926? A. I have long known Mr. Case in a general way, and before my association with him under this part-time agreement, which began in 1926, had followed his work to a considerable degree from the standppint of general interest. I knew what he was doing, had discussed his problems with him, and on occasion assisted in the solution of some of them.

XQ219. Problems relating to photographic emulsions, developers, and so forth? A. Yes, 272
that was one of the early problems encountered in the Case system.

XQ220. Just what work did you do on that prior to 1926? A. I discussed the matter with him, made several suggestions of one kind or another. I have forgotten the exact details of it at the present time.

XQ221. Did Case make his own photographic emulsions—A. No.

XQ222. Developers? A. No.

XQ223. Whom did he take it up with? A. These problems were handled by large manu- 273
facturers of photographic material. The Eastman Company was very helpful in the solution of these problems.

XQ224. Case took it up first with Eastman? A. I cannot remember—

XQ225. Do you remember when he took it up with Eastman? A. I don't have that in mind.

XQ226. Case used the Western Electric amplifiers, microphones and loud speakers in his work on talking pictures, didn't he? A. A good deal of the Case amplifying equipment was home made equipment. As for as I know the

earliest amplifiers were not Western Electric amplifiers, bue were built in the laboratory; I built a number of them in the form required.

XQ227. Then he did take up the use of the Western Electric amplifiers, microphones and loud speakers? A. That is true, when the Movietone system was commercialized.

XQ228. You spoke of the DeForest patent 1,489,314, there were two separate negatives there, weren't there? A. Yes, sir.

275 XQ229. Those would be separately developed, would they not? A. Yes.

XQ230. In a manner appropriate for each? A. I find no such statement as that, or any such statement of a separate development in the entire patent.

XQ231. You know that they would be developed in a manner appropriate to each? A. I cannot make that statement.

XQ232. It would be absurd to do otherwise, wouldn't it? A. I think it might be obvious to do that.

276 XQ233. It was the practice in the art prior to 1921, to correct as far as possible for under exposure or over exposure by means of under or over development, was it not? Talking about pictures, photographs. A. It is possible to compensate to some degree for inaccuracies of exposure by variations in development, and that was undoubtedly used in certain cases prior to 1921.

XQ234. What was your connection with the Tri-Ergon Company? Did you ever have any connection with that company? A. I have no other connection, other than having been asked to assist in some of their problems at occasions.

XQ235. You mean, is that recently or does that go back? Of course, you have a connection with them in this case, but I am not talking about this case; were you working with them in previous years? I am talking about the American Tri-Ergon. A. I was asked to assist in some work, I think, beginning in the summer sometime of 1930, I think that was the first.

XQ236. 1930. Have you ever had any connection with the German concern? A. No, I have had no connection with the German concern.

XQ237. What work have you done on the 278
glow tube in connection with the American Tri-Ergon? A. None whatsoever. That is, no practical work. I have, as I mentioned before, experted in a case on the glow light for them.

XQ238. Your knew of their use of the glow tube, didn't you? A. In a general way, yes.

XQ239. Have you ever seen it used? A. Seen any glow tube used?

XQ240. Yes. A. Oh, yes, many times.

XQ241. In these talking movie houses? A. I have made thousands of feet of film using it. 279

XQ242. In your laboratory? A. Yes.

XQ243. Are you familiar with the apparatus that was used or advocated by the American Tri-Ergon Company? A. In a general way.

XQ244. The glow tube gives a comparatively low illumination, does it not? A. I would not say that to be the case, sir.

XQ245. It is so low that it works on the lower part or toe of the characteristic curve? A. Not necessarily.

XQ246. Perhaps not necessarily, but that is where it does work, isn't it? A. No, I wouldn't say that.

280 *William C. Ballard, Jr.—For Plaintiff—Cross.*

XQ247. Do you know that? A. I know that it is possible by glow tube recording to get fully exposed negatives made on positive stock. I have done it a number of times.

XQ248. In 1926, you saw that done frequently, did you? A. In 1926, I saw satisfactory sound records made by the use of the glow tube, yes, sir.

XQ249. And they were working out on the toe of the curve, weren't they? A. Some of the
281 records were so made.

XQ250. And all of them were, weren't they? A. No, I do not know that.

XQ251. Were any of them made working on the straight line portion of the curve? A. There are many different types of glow lights, many different types of glow lights will give ample light to fully record the sound when you make it on positive stock.

XQ252. I am talking now of glow lights used in your laboratory? A. I have made records in my laboratory on positive film with a glow
282 light, which I assumed was fully exposed.

XQ253. Did you ever know of the glow light being used on positive film, not on the toe of the curve, on the straight portion of the curve, outside of laboratory work? A. I was conversant, of course, with the tests that were being made in my own laboratory, I have done that in my own laboratory.

XQ254. But speaking of things outside of your laboratory now. A. I have no definite knowledge of what was going on in every laboratory in the country.

XQ255. Are you familiar with the use of the Kerr cell? A. Yes, sir.

William C. Ballard, Jr.—For Plaintiff—Re-direct. 283

XQ256. Do you use that in your laboratory? A. I have had some experiments with the Kerr cell.

XQ257. Do you know of that being used in the actual production of talking movies? A. I understand the Kerr cell has been applied for sound recording by the Westinghouse Company or some other company that is a subsidiary of the Westinghouse Company.

Re-direct Examination by Mr. Ward: 284

RDQ259. I direct your attention to some portion of your testimony on cross examination, and also in connection with your direct questions 44 and 45, wherein you were asked in substance, to state the extent to which the method of the patent had gone in use, and in answering you stated that it was your understanding that nearly all of the larger companies employed this method of recording on separate films and printing together on a single positive in at least a part of their production; and it might also in- 285
clude separate development of these films. Are there any other features of the patentee's process that have gone into extensive use other than these features that I have mentioned? A. These films are simultaneously recorded, that is, the sound and picture negative records are made at the same time, and then these two negative records are successively printed on different longitudinal extended portions of the same positive film.

RDQ260. At XQ149, page 160 of the record, Mr. Neave stated in substance in his question

286 *William C. Ballard, Jr.—For Plaintiff—Re-direct.*

to you, that there was nothing new at the time of the invention of having the sound record and the picture record on the same film, and you answered, "On the same film"—

Mr. Neave: On the same positive film.

RDQ261. You answered, "On the same positive film." Please state what, if any particular
287 process you had in mind answering that question. A. The process that I had in mind answering that question was the old one of recording by sound and picture on the same negative film.

RDQ262. At XQ151 you were asked, in substance, "And there was nothing new in photographing the sound record and the picture record simultaneously on the same negative film," and you answered: "That is true." And you were next asked, at XQ152, in substance, "And there was nothing new in transferring these
288 negatives to a positive film," and you answered "No."

Will you please state what system or systems you had reference to in answering those last questions? A. This, of course, applied to the single film system in which both sound and picture records were made on a single negative film.

RDQ263. At XQ164, you were asked what you thought was disclosed in the patent in suit that is new, and you answered, "I find no reference whatsoever, in the prior art to any system which employs two separate negatives, sound and pic-

289

ture records, develops separately, and prints them in the usual manner on a single positive film."

And at XQ167, page 163, you were asked then: "Then what is new that you do not find in the prior art, that you think is new here, is printing both the separately exposed, separately developed negatives side by side on the same side of the positive film, is that what you mean?" And you answered, "I think that is a fair statement."

290

I will ask you whether in addition to those features you find anything else new in the patent in suit? A. Yes.

RDQ264. By "additional" I mean not mentioned in your answer here. A. Yes, the process of simultaneously recording the sound and picture record and in printing them side by side on different longitudinally extended portions of the same positive film.

RDQ265. That is, without regard to whether they are separately developed or not? A. Yes.

291

RDQ266. At XQ168, you were asked in substance if you did not know it was old and well-known to have the picture sequence and the sound sequence printed side by side on a positive film, and you answered "Yes." Will you please state what process or processes you had reference to in answering that question? A. I had reference to the single film process in which the negative records of sound and picture are made on ths same negative strip.

RDQ267. You were asked by Mr. Neave in substance where in the original specification of

the patent as filed you found the idea of printing the sound and picture negative, or the records of the sound and picture negative, side by side on the same side of the positive film, and as I recall it, you stated that you found that by inference in the fact that they said they should be printed in the usual manner. I will ask you to refer to the last paragraph of that original specification and state whether that paragraph,
293 by following that paragraph, you would or would not necessarily attain that result? A. I believe that this result will be attained necessarily by following the provisions of that paragraph.

RDQ268. Is it not also true that the old system which the patentees referred to and which they intended to improve was that system of printing? A. It is.

RDQ269. Do you find any suggestion anywhere in the specification of any other system of printing or any other relation of sound and pic-
294 ture records on a positive film other than that? A. I do not.

RDQ270. Mr. Neave questioned you in regard to whether you found any disclosure in the original specification of the idea of photographing vocal or other sounds having slight or otherwise varying differences of tone and intensity, and I believe you stated that you found that in the specification where it made reference to speaking films; is that correct? A. Yes, sir.

RDQ271. Is it possible to photograph conversation, talking without having that result? A. It is not.

William C. Ballard, Jr.—For Plaintiff—Re-direct. 295

RDQ272. Are you familiar with the commercial history in this country of the sound picture art with respect to the Western Electric and Case, about which Mr. Neave has examined you? A. I think I am.

RDQ273. Did you have any connection with the matter? A. Yes.

RDQ274. Will you please state what that history is, as you understand it, and your connection with it, giving the dates as near as you can? A. With reference only to the Fox Case 296
organization and the Western Electric, Mr. Ward?

RDQ275. Well, you can take it all in as far as you know it. A. With reference to the Fox Case organization and the Western Electric, about August, 1926, the first commercial public demonstration of motion pictures was opened to the public, and this system employed a synchronized disc record which was reproduced simultaneously with the showing of the pictures. It was sponsored by the Warner Brothers or- 297
ganization, and the apparatus was produced by the Western Electric Company.

Sometime later in that year—I am not quite sure as to the exact date, whether it was still in 1926 or early in 1927,—the Fox Company gave public exhibitions of sound on film, utilizing the equipment essentially similar to that described in this patent. And after that time, apparatus was built for the Fox organization by the Western Electric Company, and theatres were equipped for showing sound on film produced by the Fox organization with Western Electric equipment.

298 *William C. Ballard, Jr.—For Plaintiff—Re-direct.*

RDQ276. That is to say, the sound picture process using sound film rather than the disc record was introduced commercially by Mr. Case, according to your information— A. In connection with the Fox Company, yes.

RDQ276. (Continued.) —in connection with the Fox Company, prior to any commercial installation by the Western Electric Company of a sound film system, as distinguished from the
299 graphophone? A. I think that is true. Of course, it must be remembered that Dr. DeForest gave some experimental demonstrations two or three years ahead of this date, but these demonstrations were not continued and lasted only a few days or a few weeks, as the case may be.

RDQ277. Dr. DeForest started about 1923 or 1924, did he not? A. I think 1923 is the correct date.

RDQ278. And the Western Electric was called in by the Fox Case people after they had the Case system operating, is that correct? A. Yes,
300 that is true.

RDQ279. And they were first called in for what purpose, if you know? A. To supply electrical apparatus, loud speakers and amplifiers.

RDQ280. And do you know whether the so-called Fox Case system at that time in 1926 used the system of this patent in handling the films? I am referring to the very beginning of it. A. The earliest Case films were made with negative sound and picture records on a single negative film.

RDQ281. That is, when they started out they used the old system that the patentees referred to? A. That is correct.

William C. Ballard, Jr.—For Plaintiff—Re-cross. 301

RDQ282. Were you with them up to the time they made any change in that system? A. Yes.

RDQ283. Did they later change over to the system of this patent or not? A. That is true, they did.

RDQ284. Do you remember about when that was? A. I have not any precise date in mind. It was probably sometime in the latter part of 1927 or thereabouts, although that may be several months out one way or the other. 302

Recross-Examination by Mr. Neave:

RXQ285. Just now, as I understood you, you said that the Fox Case Corporation in first using sound on film took both the sound record and the picture record on the one negative and then printed on to a positive? That was it, was it? A. I think that was true in the early films.

RXQ286. And then you said that subsequently they would take the sound on one negative and the picture on another negative, did you not? A. I think I made that statement. 303

RXQ287. And it is true, is it not, that they did that only after they obtained a license with the Western Electric Company and they did that in using the Western Electric interlock apparatus or system, as between the taking of the sound and the picture negative? A. I have no knowledge of that.

RXQ288. You knew they were using Western Electric apparatus when they did that? A. When they took the two separate films?

RXQ289. Yes. A. That was my understanding, that that was the case.

304 *William C. Ballard, Jr.—For Plaintiff—Re-cross.*

RXQ290. They were also then using the light valve rather than the glow lamp, were they not? A. I think the two systems were used alternatively for a considerable period of time in the early part.

RXQ291. And in all of the Fox Case work on talking movies, they used the Western Electric microphones and amplifiers, did they not? A. No, I do not think that is a correct statement.
305 The original demonstration, the first public demonstration in New York of which I have any knowledge, utilized two amplifiers, one of which I personally built, and the other one was built for Mr. Sponable from parts that were purchased in the open market. Neither one of them was Western Electric amplifiers.

RXQ292. What was that exhibition? A. That was an exhibition, as I remember, in the Times Square Theatre. It was not a commercial public exhibition. It was a test exhibition.

RXQ293. Wasn't it the Sam Harris Theatre
306 on 42nd Street? A. I am a little hazy as to the exact location of the theatre.

RXQ294. I have a note that that was on January 1, 1927, and Western Electric amplifiers were used in reproducing. A. Western Electric amplifiers may have been substituted at a later period. The first demonstration did not employ Western Electric amplifiers.

RXQ295. Do you remember that the Fox Case Company first got its Western Electric license as a sub-licensee of the Vitaphone Company? A. I know nothing of that, sir.

RXQ296. And this exhibition, which was not

William C. Ballard, Jr.—For Plaintiff—Re-cross. 307

a commercial one, that you speak of, at some theatre on 42nd Street, that was after December, 1926? A. I cannot place the exact date. I have no means of doing it. I think it was before that period.

RXQ297. When was the first Fox commercial theatre equipped with any sound-on-film system? A. I cannot answer that question.

IT IS STIPULATED with regard to the title 308
papers, including the agreement between William Fox and Tri-Ergon, A. G., Exhibit 8, and the assignment from Tri-Ergon, A. G., to William Fox, Exhibit 10, that defendant waives any objection to the lack of proper notarial acknowledgments in those papers, and that both the assignment and the agreement may be accepted not only as duly proven, but it is further stipulated that the parties who signed those two documents were officers of the company and duly authorized to 309
execute those papers.

Mr. Neave: For the purposes of the present case, we do that.

The Court: That is for the purpose of this case only?

Mr. Neave: Yes.

IT IS STIPULATED that Western Electric or its subsidiary, Electrical Research Products, Inc., has an agreement with the defendant, whereby the former agrees to defend suits for infringement involving any apparatus or processes which West-

ern Electric or Electrical Research Products, Inc., as the case may be, licenses to defendant, and also agrees to hold them harmless of any damages or liability resulting from any such infringement.

Mr. Neave: I agree to that, subject to these corrections: None of the agreements are with the Western Electric Company, as I understand it, but all of them with the Electrical Research Products
311 Company, and there is no agreement with reference to damages, except the Electrical Research Products is to pay and satisfy all judgments and decrees for profits, damages and costs. And I agree that the Electrical Research Products, Inc., is a wholly owned subsidiary of the Western Electric.

JOHN M. JOY, called as a witness in behalf of
312 the plaintiff, being first duly sworn, testified as follows:

Direct Examination by Mr. Ward:

John M. Joy; 60; residence, Yonkers, New York; I am an electrical engineer working for the American Tri-Ergon.

I am familiar with the so-called Tri-Ergon system; I first became familiar with that, about August of 1926.

I think it was in July, 1926, the Tri-Ergon system was brought to the attention of Mr. Fox,

and the indications were that it had some merit, and we decided to investigate it in Europe, and after that investigation, we decided to bring it over to the United States for the purpose of making critical tests on it. I investigated it in Europe for Mr. Fox. I decided to bring it over to this country in order to make critical tests over a longer period of time than was available in Europe. The apparatus was put together, assembled and shipped to this country the latter part of 1926. I think it arrived in New York 314 the last week in December, 1926.

We decided to bring over one of the original inventors, who was thoroughly familiar with the equipment, in order to carry on further experiments here for comparison with the Case system, which Mr. Fox already had taken on, and with other work that was going on in the United States. The idea was to obtain the best possible system for making sound motion pictures. We brought over Dr. Engl, one of the original associated inventors of the Tri-Ergon system, and he was in the United States for about six months, I believe, working at the Fox 315 Laboratories, Fox Studios, especially the studio on 54th Street, which had been equipped especially for the making of sound picture work, and investigations.

The apparatus, when it arrived, was set up there in the 54th Street studio, and various experiments were carried on in connection with first recording, and I think a great many feet of film were made in order to determine the practical results obtained from the system.

Q9. Was any of that film reproduced? A. Yes.

316 *John M. Joy—For Plaintiff—Direct.*

We brought over, besides the recording apparatus, a complete reproducing apparatus, which had been in operation in Germany for some time previous to that.

Q10. Can you tell us whether or not in connection with the system, as it was brought over here, and as tried out in the Fox Laboratories, as you say, they used the single system throughout of recording sound and pictures on the negative and then printing that onto the positive, or
317 what system did they use? A. They used a double system throughout, that was one of the distinguishing features of the system at that time. By the double system, I mean that they took their sound and pictures simultaneously on separate films. Then they were developed separately appropriate to each film. And after they were thus developed they were combined on a common positive. That is the developed negatives were printed then onto a common positive. And when so printed the sound track was in a displacer relation with the picture and alongside
318 of it longitudinally on one edge. I think at that time we were printing the sound track outside of the sprocket holes in order to preserve the original size of the picture. That is, in order to give the full size of the area usually used by pictures to the picture, the sound track was printed outside the sprockets. But otherwise, the same relation that the sound and pictures bear on this Exhibit 22. The standard German projector at that time was arranged to operate in that way. We afterwards printed the sound track in what had become practically the standard American system for the sound track, that is, inside the sprocket holes.

That is, the Tri-Ergon system as brought over here, and the apparatus for recording and reproducing, was arranged in accordance with what I understood to be the general German practice as of that date, in which the pictures occupied the usual full area between the sprocket holes and the sound track was outside the sprockets, but on the same side of the film. And when that system came over here, I say it was customary in this country to have the picture and the sound tracks both inside the sprocket, so we afterwards changed it over to that idea. The positive record, 320
as used in the Tri-Ergon system, when it was brought over, was approximately like Fig. 2, the sprocket holes were standard for all standard machines.

As to the type of sound picture apparatus that Western Electric was putting out at the time, we brought this Tri-Ergon system over here, I don't know that; I can't remember that they had any commercial type of sound recording apparatus available at that time. Possibly they were experimenting in the laboratories. The only sound pictures for reproduction purposes at that 321
time, as I remember, were the Vitaphone, which was a synchronized disc, and Dr. DeForest. The Vitaphone, the synchronized disc, was Western Electric, or a subsidiary of Western Electric. At that time I believe they were putting that out commercially, they were recording to the best of my knowledge on a disc at that time.

Q26. Now, can you tell us aside from the Fox Film people and yourself and Dr. Engl, whether anyone else had access to that Tri-Ergon system and apparatus when it was over here? A.

Oh, yes; the Western Electric Engineers all had complete access to it.

Q28. How did they happen to get access to that? A. Well, I suppose they were interested in all sound picture development—

Mr. Neave: Does he know or is he just guessing?

Q29. State what you know, Mr. Joy? A. They
323 were interested in all sound picture development, and they were trying to interest all producers in their system. They had certain fundamental patents for amplifiers which—

Q30. You mean patents on amplifiers? A. They had amplifiers, anyway, which the producers were practically compelled to adopt in order to produce their motion pictures. There were no other amplifiers available.

Q31. That is, as far as you know, they had the amplifiers which had to be used? A. Yes, as far as I know.

324 Q32. Now, state what you know about their having access to this system and apparatus at this time, giving the time? A. I know that Mr. Otterson and Mr. Drake frequently came to the Fox Laboratories when the Tri-Ergon system was under tests of various kinds, and it was decided to form a committee in order to pass upon the features of the Tri-Ergon system, if they were of any value, and such a committee was formed. Why the Western Electric had representatives on that committee I do not know.

Q33. Did they have a representative on that committee? A. They did, yes.

Q33. Who was it? A. Mr. Drake.

325

Q34. Beyond those last two gentlemen you mentioned, Mr. Drake—and who was the other? A. Mr. Otterson. Mr. Otterson was not on that committee. The committee was organized entirely, as I said, to investigate the features of the Tri-Ergon system as compared to what had been done in America.

Q35. Both Otterson and Drake were Western Electric men? A. Yes. I think Mr. Otterson was. He afterwards became president of Electrical Research Products. I do not know whether it 326
was formed at that time or not, I do not remember.

Q36. And they had full access to this apparatus? A. Yes, not only that, but frequently, at all times, many of their engineers had access.

Q37. They were allowed to come and study to their heart's content? A. Yes.

Q38. Experimenting with it? A. I do not think any experimenting was done.

Q39. Observe its workings? A. Perhaps observe its workings.

Q40. And its results? A. Yes.

This was the early part of 1927, the middle of 327
January, 1927, when we had received all of the apparatus and had it set up in working order. I do not know of any commercial system that had been put out previous to that time by Western Electric with the sound on the film.

Later on they did come out with such a system after having had this instruction and access. I know that they were investigating the construction of all sound, available sound picture apparatus. They investigated and looked over the Case reproducer, and also the Tri-Ergon repro-

328 *John M. Joy—For Plaintiff—Cross.*

ducing apparatus, with the idea of possibly incorporating any or all of the good features of this apparatus in a standard American reproducer which came along some time after that in quantities.

Q44. You are quite certain it was after this date, as far as you know, when this inspection was given Western Electric, that they came out with their sound-on-film system? A. Yes. Their recording system was quite some time after that,
329 I am sure, because there was continual disagreement as to the merits of the glow light recording of Case and a proposed light valve system of the Western Electric, and afterwards they set up and were given facilities in the Fox Laboratories for establishing, I think, one of the first light valve recording apparatuses for making commercial pictures. That was set up in the Fox Studio on 54th Street sometime after the Tri-Ergon system had been taken over by Mr. Fox.

Cross Examination by Mr. Neave:

330 This apparatus that was brought from Germany that I have been testifying about was brought in 1926. It arrived in New York the latter part of December, 1926. And prior to that time the Fox Case Corporation had in this country recorded sound-on-film. That Fox Case Corporation was the sound picture subsidiary of Fox Film.

XQ48. And it acquired a Western Electric recording license as a sub-licensee of the Vitaphone in December, 1926, did it not? A. I think that is correct. It acquired, if I may say, not recording licenses, but amplifier licenses, which were only part of the recording system.

XQ49. And when the first sound pictures were recorded by the Fox Case Corporation here with the sound-on-film in 1926, there was used a Western Electric condenser microphone and Western Electric amplifiers, that is true, is it not? A. I don't think so. The first sound pictures which were recorded in Fox Studios in New York were recorded entirely by Case apparatus. That was in July, 1926.

XQ51. I had a note of the recording in June, 1926. A. It may have been June. I am not positive as to that date. It was certainly not after July, the first recording. 332

XQ52. My note is that the Western Electric condenser microphone and the Western Electric amplifiers were used in recording those films. Is that wrong? A. I know the first apparatus which was brought down from Auburn was set up in the old Fox Studio on 55th Street, and my recollection is that the microphone and the amplifier was one, especially the amplifier, was one that had been constructed by Case for experimental purposes in his own laboratories. After that, I cannot give you any definite date without refreshing my memory. 333

XQ48. Do you recall that short subjects produced at the Fox Case Studios in November, 1926, were shown publicly at the Sam Harris Theatre on 42nd Street in January, 1927? A. I think you refer to Racquel Meller subjects. I did not see those subjects made. At that time I was in Europe. In November, 1926. I remember the showing of those in the Harris Theatre in January, 1927. I am not definite as to whether Western Electric amplifiers were used in reproducing there.

334 *John M. Joy—For Plaintiff—Cross.*

There may have been an all-sound program at the Times Square Theatre in September, 1927, when complete Western Electric sound-on-film reproducing system was used. I recall the reproduction of a program at that time. I should say more than 19 Fox Theatres were equipped with the Western Electric sound-on-film equipment by the latter part of 1927, because the Western Electric had by that time gone into quite extensive production of the reproducing
335 apparatus.

XQ54. Of course, that obviously and necessarily was the result of prior laboratory development; you recognize that, do you not? A. Possibly of information obtained by prior workers in the art also.

XQ55. That is possible. You don't know that? A. I think so. That is my opinion.

The Western Electric Company furnished the Fox Case Company with an electrical inter-lock as between the picture camera and the sound camera early in 1928.

336 XQ57. Prior to that time Fox had recorded sound pictures on a single film, had they not? A. Except for the Tri-Ergon system.

XQ58. That was experimental? A. Not entirely.

XQ59. How did it go beyond that? A. I don't know what you mean by "experimental".

XQ60. Well, Fox had recorded sound pictures on a single film, had they not, and they had done it in regular commercial production, had they not? A. In September, 1927, I should say that they were in commercial production. The Tri-Ergon system. I should say that the Tri-Ergon

system was not experimental at that time. It was practically, at the time it was brought over here, the only reproducing apparatus which had been tested out commercially, and it could have been put into commercial operation much earlier in this country except for the fact that the Western Electric preferred to develop their own standard apparatus.

XQ61. It is a fact, is it not, that up until early in 1928, Fox had been recording sound and pictures on a single film, then they got the interlock? A. Then they obtained the Western Electric more as an experimental apparatus than as a standard recording apparatus. 338

XQ62. And they continued to use it, did they not? A. Not entirely.

XQ63. The interlock made separate films possible with the sound recorder off the set, did it not? A. Yes, that is true. That was an advantage.

XQ64. And Fox had now gone over to the Western Electric light valve recording; the last four pictures having been recorded with it? A. I think they were compelled to go over, not from any choice. 339

XQ65. By competitors? A. By financial pressure, perhaps, certainly not because the light valve technically produced a better quality record than the Aeo light. I think that has been proven and demonstrated that the quality of record produced by either one is about the same.

XQ. 66. Fox did use negative emulsion for the sound negative until sometime in 1929, did they not? A. I could not answer that—

XQ67. They did not begin to use positive emul-

sion with negative sound film until the Aeo light was improved to the point where it would give sufficient light for that purpose? A. I could not answer definitely on that because I have no knowledge of the fact.

The apparatus was shipped from Dr. Engl's laboratory from Germany in the latter part of 1926 or early 1927. And Engl came at the same time. He brought with him a two film combined recording machine and camera.

341 XQ71. And that was involved in what you call the Tri-Ergon system, was it not, to have a combined camera for the sound and picture? A. The camera for the picture and the camera for taking the sound are separate. They can be combined or removed one from the other. In this particular apparatus that came over here, they were combined. By "combined" I mean that they were driven synchronously from a single motor. Of course, the film for the picture had to run intermittently, and for the sound continuously.

XQ74. And then you got the vibrations in that
342 combined camera due to the intermittent action? A. No, because this camera was especially built to eliminate such vibrations.

Engl brought with him his own amplifiers, the Tri-Ergon amplifier which had been developed, a condenser microphone; also various types of microphones, and the Cathodophones. The latter was an electron discharge device used as a microphone. It was not entirely a glow discharge. That device was used commercially in Germany. It was used there; I don't think that it was developed to the point of being a commercial device, but it was used over continuous periods for making pictures, sound pictures.

XQ84. But you say it was never developed into a commercial device? A. I mean it is one of those things that has not been standardized for commercial production in large quantities.

XQ85. It had an extremely short life, did it not? A. Under the old condition which you probably refer to, its life, I would say, would be short.

XQ86. About 50 hours, I am told? A. Possibly; but since that time it has been improved, and I know that fundamentally it has some very good features that are superior for microphonic 344
work over some of the microphones that are used at the present time.

Engl, when he came here in 1927, had with him a reproducer for 40 millimeter film. That was a standard machine for sound-reproduction purposes in Germany at that time. It became standard because it was the only one of its kind which had been successful in reproducing pictures, sound pictures, commercially. They adopted the idea of the overhanging sound track in order to preserve the full size of the picture.

XQ92. Were the standard machines of Ger- 345
many at that time designed to take a 42-millimeter film or 40-millimeter? A. In that respect it was not standard, but in regard to the sprocket spacing, it was standard. The changes necessary in the German machine were to make the gate wider and to provide some attachment for picking up the sound. That, of course, was—there was no particular one at that time which was standard for any sound-reproducing. They tried to use as much of the standard features of the picture projector as possible.

346 *John M. Joy—For Plaintiff—Cross.*

XQ93. I have before me a translation of an article by Hans Vogt, published in 1925, and entitled "The reproduction apparatus for picture tone films of the Tri-Ergon, A. G., of Zurich." Dr. Vogt there states that for certain technical reasons, a projection apparatus of the Ertel concern in Munich was employed—

XQ93. (Continued.) And then Dr. Vogt proceeds to say: "In so doing, it was necessary to be sure to widen the film guidance in such a way that the picture tone film with a width of 42
347 millimeters could pass through it." Is that your understanding of the work that had to be done to adapt this 42-millimeter film to the projectors as they then existed? A. Well, you would certainly have to widen the gate of the picture machine in order to pass a wider film through.

When Engl was here with his apparatus, he recorded the sound on one film and the pictures on another. And each of those films was of standard width. He had a special printer for printing the two records on a 42-millimeter film. And he brought over with him some pictures
348 that had been recorded in Germany, in addition to making some recordings in the Fox Case.

XQ99. And then the result of that work, or, rather, what you got from the reproduction of those films, was compared, was it not, with the then existing Fox Case system? A. The same films were not compared.

XQ100. No, of course not, but the quality and tone, and so forth, was compared? A. That was done at various time, many times.

XQ101. And the reproduction turned out not to be as good as in the Fox Case Movietone, did it

not? A. I don't know. There was a difference of opinion on that.

XQ102. But in any event— A. Some films, as I remember, were just as good as the Fox Movietone.

XQ103. In any event, after these comparative tests, Fox, as a matter of fact, continued his Fox Case system, did he not? A. Yes; and he also exercised his option and took up the Tri-Ergon rights.

XQ104. You mean Mr. Fox personally did that or am I speaking of something in litigation? 350
That was my understanding, that Fox himself did. A. That was my understanding.

Then, I think, Engl returned to Germany in June, 1927. Engl was here in 1929.

XQ107. And he brought with him a reproducing outfit adapted for standard width film, did he? A. I am not sure that Engle was here in 1929. I would like to correct that.

About that time there was sent over from abroad some apparatus that had been redesigned so as to produce a standard width film; I brought that back myself. That was brought to Mr. Fox's 351
attention at that time.

XQ110. But Fox continued to use the Western Electric system? A. Western Electric reproducing apparatus, I do not know—

XQ111. And the recording apparatus, too? A. That is very true, because he had a license agreement with them previously to that.

XQ112. Have you any experience at all with the glow tube used in recording? A. What do you mean by "experience"?

XQ113. Have you ever used it yourself, are you that kind of a person? A. Why, I have been

352 *John M. Joy—For Plaintiff—Cross.*

present many times when recordings have been made with the glow light.

XQ114. What about the illumination, what part of the characteristic curve did it work on? A. It depends on what particular glow tube you refer to, I think.

XQ115. Wasn't it part of the Vogt system and idea that you would use this glow tube which gave low illumination, working on the lower part of the toe, as they seem to call it, of the characteristic curve, so that in the negative, after
353 it was developed you had distorted values, and then by printing also on the positive on the same toe of the curve, you corrected those values, those abnormal values, so as to approximate normal values in the final positive? A. I think the idea of recording on the toe part of the curve originated in America. The particular glow light that the Tri-Ergon system used at that time had a higher intrinsic brilliancy than the glow lights that were being used in the United States. As regards to the distortion of the print, they did develop an idea in which by developing the
354 negative to a higher gamma, it was sought, intended to avoid that distortion in the emulsion by correcting it by overdeveloping.

XQ116. That development accentuated the defective values, didn't it? A. Well, I do not know, I am not prepared to discuss that.

XQ117. Do you remember that Vogt had a patent on that? A. All three inventors had a patent on it, in which the real idea, I believe, was to overcome that distortion, and at the same time have a transmission value of a postive of about fifty per cent. of the unmodulated sound track.

XQ118. The earlier sound recording of the Tri-Ergon Company, the German one, I suppose, was on the same negative as the picture, wasn't it? A. No. I can't definitely answer that, that is that they never recorded on a single negative, but if they did, they went to the double system as being more advantageous for sound picture work.

XQ119. For reasons of development, I suppose? A. Partially, and other reasons that flow from it. 356

XQ121. What other reasons? A. Well, for purposes of editing the film, purposes of adding sound effects, which are not feasible always to have when the picture is being made on the set.

XQ122. I do not understand that about editing, I should think it would be well to have them all on one film for editing, because if you edit the picture, you edit the corresponding sound track, do you not? A. It is more difficult to edit the sound with the picture, if it is all on one film. It can be done better by putting them on separate films. To edit means to take out or put in some- 357 thing.

XQ124. If you take out sound or put in sound, you have to take out and put in some picture, too, don't you? A. Sometimes the sound is very bad, on a bad film, and it can be corrected by putting in additional sound.

XQ125. A correction rather than by adding something to the length of it? A. Well, it is called, I think, in the film industry, editing the film.

XQ126. Tell me something more about this committee that you were speaking of, on which

358 *John M. Joy—For Plaintiff—Cross.*

some Western Electric representatives sat. Frankly, I know nothing about the committee, and by telephoning we can't find out if those people sat on the committee. A. Ask Mr. Drake.

XQ127. We have asked him. He does not recall any such committee. A. His memory must be very bad then, if he doesn't remember.

XQ129. Will you tell me more about where they met, how many there were, and what they did, so that I can trace it somehow? A. I think
359 there were two Western Electric men, Mr. Drake and Mr. Crandall.

XQ130. I thought you said Otterson? A. I didn't say Otterson was on the committee. Mr. Otterson frequently was in the studio. Crandall is now dead. I think he was associated with the condenser microphone.

XQ132. Tell us something about the committee, who was on it? A. Mr. Sponable of the Fox Case Corporation, Mr. Engl and myself were on that committee.

360 XQ133. Where did you meet? A. We met several times at the 54th Street studio. We had dinner several times in various places, I can't remember.

XQ134. Did that committee have any technical name? A. The committee had no technical name, no.

XQ135. It was a committee of what? A. A committee of technical men. Mr. Drake did not consider himself a technician, but more from the commercial angle. The idea of this committee was to investigate all of the Tri-Ergon apparatus.

XQ136. The members of the committee were

appointed by whom? A. I do not remember now who.

XQ137. To whom did the committee report? A. Mr. Courtland Smith was, as I recollect now, the originator of that committee.

XQ138. Who was he? A. He was at that time in charge of the Fox Movietone, Fox Case Corporation.

XQ139. Who invited those gentlemen to sit on that committee? A. I think he did. 362

XQ140. To whom did the committee report? A. I think they reported to him.

XQ141. Did the committee ever keep any minutes? A. They kept records, I think each individual kept notes, naturally.

XQ142. Have you got your notes? A. I can't tell you that.

XQ143. Who was the chairman of the committee? A. I think Mr. Sponable was chairman.

XQ144. Who was secretary? A. I really can't tell you now.

XQ145. Did they ever render a report to anybody? A. I did, personally. 363

XQ146. As a committee, I mean. A. I do not know.

XQ147. I rather gather it wasn't really any formal committee of any organization or anybody, but just you four or five gentlemen got together and talked things over? A. Well, it was a sort of informal committee but its object originally was to get a fair estimation of the Tri-Ergon system, the various features concerned in the Tri-Ergon system.

XQ148. In what year did that exist? A. That was in the early part of 1927. I should say it was

364 *John M. Joy—For Plaintiff—Cross.*

organized in the early part of January, possibly February of 1927.

XQ149. And lasted until when? A. Well, until about June, or until the option was taken up by Mr. Fox.

XQ150. And the Committee rendered no report, as far as you know, as a committee? A. I do not know what report the Western Electric members of the Committee made.

XQ151. But I mean the committee, as such,
365 made no report? A. Not as a whole.

My experience with these Tri-Ergon matters goes back to about July, 1926.

XQ153. Do you remember what kind of a film the Tri-Ergon people used, wasn't it a very heavily bromided film? A. I couldn't tell you. I couldn't tell you about the developing characteristics now, I have no recollection and no notes here.

I do not fluently read German.

XQ156. I have a translation here of what purports to be an article of Hans Vogt in a German
366 publication called the Film Kurier. Will you look at that and tell me if you have read that publication, which purports to have been published in 1932? A. I have never read this article.

XQ157. Did you notice in reading this article, as I handed it to you, Vogt apparently says, with reference to what he calls his invention protecting the separate developer that he himself was the personal inventor, did you notice that? A. I did not.

Mr. Ward: I object to that question.

The Court: He said he did not read it.

Mr. Neave: He said he did not notice it, so I can't get very far with it.

Mr. Ward: I think it is an unfair way of trying to get statements of that kind in the record.

The Court: It does not amount to anything.

XQ158. Do you know anything on that subject? A. I know considerable about Mr. Vogt, yes, which I do not want to put on the record, for your sake.

I wasn't in Berlin in 1922.

Re-direct-Examination by Mr. Ward: 368

RDQ160. Mr. Joy, do you know whether Mr. Vogt was connected with the Tri-Ergon Company or the American Tri-Ergon Company or any of its affiliates in 1932, when this alleged article was written? A. He was not connected with the American Tri-Ergon or with any Tri-Ergon Corporation.

RDQ162. Do you know whether at that time in 1932, he was connected with any company or organization antagonistic, at that time, antagonistic to Tri-Ergon interests? A. Well, I know that 369 overtures were made to him by companies antagonistic to the Tri-Ergon interests.

RDQ163. You had some personal connection with Mr. Vogt with relation to that general matter, did you? A. I did, in May, 1932.

Mr. Ward: Plaintiff rests, your Honor.

Mr. Neave: Mr. Hoffmann, will you take the stand?

The Court: Is this further cross-examination?

Mr. Neave: There are some corrections I want to make. I should think it is further cross-examination, but I don't care.

370 *Louis B. Hoffmann—For Plaintiff—Recalled—Cross.*

LOUIS B. HOFFMANN, recalled.

Cross Examination (Continued) by Mr. Neave:

XQ173. Look at the bottom of page 113, XQ166, of your testimony I asked you: "In that work with those developers with the Fox Film, can you tell me what the gamma was that you used for the positive?"

371 And you said: "In the vicinity of the gamma of 2." Am I right in understanding that the gamma was in the vicinity of 2 for the sound negative and the sound positive and for the picture positive? Of course, that is not what the question and answer said. I am expanding that. A. It cannot be all three of them.

XQ175. Then we will take it step by step. I will try to shorten it. My question there, referring to the positive, what did you understand that to be; the sound positive? A. The printed positive.

372 XQ176. The final positive? A. That is correct, the printed positive.

XQ177. What was the gamma for the sound negative? A. In our experimental work we developed the sound negative in various different manners, one of which was the so-called straight line processing, in which the negative sound gamma was approximately .5.

XQ178. And you also used for the sound negative a gamma of 2, did you not? A. We did develop some sound negative records, which had been made on a positive emulsion in which the straight line portion of the characteristic curve indicated a development at a gamma of 2.

Louis B. Hoffmann—For Plaintiff—Recalled—Cross. 373

XQ179. And on the negative stock, what gamma did you use? A. I can speak now only of the experimental tests that we made, because in the case of the sound records that were made for the news work, the sound was recorded on the same film with the picture. In the case of the sound records made on negative film, in our experimental work, the gamma of development was .5.

XQ180. Now, look at cross-question 167—

374 Mr. Ward: Your Honor, I think I would like to have it understood that Mr. Neave is calling this witness his own. He has gone way beyond the bounds of the direct examination. He is taking him into his experiences with the Fox Case Company—

Mr. Neave: This is cross-examination.

Mr. Ward: —before this patent was issued, as I understand. It has nothing to do with the situation.

Mr. Neave: I am straightening out this cross-examination.

375 Mr. Ward: Even that is beyond the bounds of any kind of cross-examination.

XQ181. Look at the top of page 114, cross-question 167: My question was: "And for the negative?" And your answer was ".5 to .6". Was that the picture negative you were speaking of? A. Yes, sir.

XQ182. And the picture positive and the picture negative had a gamma of 2, is that right? I beg your pardon. And the picture positive and the sound positive had a gamma of 2? A. In the vicinity of a gamma of 2.

376 *Louis B. Hoffmann—For Plaintiff—Recalled—Cross.*

XQ184. That is right. Then look at XQ168. The question there was: "And the overall?" And the answer was, "It was slightly greater than unity." What does that mean? Does that mean it was slightly greater than unity for the picture and about 4 for the sound? A. I had in mind there the experimental work which was done in which the negative sound record was developed to a gamma of .5, and the final printed positive developed so that the picture had a
377 gamma slightly greater than unity, as I mentioned there. By that I mean slightly in numerical figures, but greatly in the contrast as viewed from the screen.

XQ185. Slightly greater than unity for the picture? A. That is right.

XQ186. Now, what was it for the sound? A. The figure for which we planned was to have the overall gamma of sound unity on this experimental work.

XQ187. On the negative stock, when you were using negative stock? A. Positive stock or nega-
378 tive stock.

XQ188. You have been speaking about experimental work, what did you do in your regular work, what was the overall gamma in your regular work, for the picture, slightly greater than unity? A. The overall gamma of the picture, I know for a fact in February of this year was between, the limits of 1.2 to 1.3, or 1.4.

XQ189. And that is what you did in the olden days, that you are talking of in your testimony here? A. That is the work that was actually done in connection with the production releases of the Fox Film Corporation.

XQ190. And for the sound commercial work in the sound, what was the overall gamma? A. The overall gamma, if you used the slope or the straight portion of the characteristic curve as an indication, the overall gamma, would be 4. However, that isn't entirely correct because of the fact that the exposures were on the toe portions of the curve in the case of the sound negative which is recorded on the positive film.

XQ190-A. I am a little confused but I thought 380
at the beginning of my questioning this afternoon, you said that the gamma of the sound negative was in the vicinity of 2, and then I thought that in your answer you gave me just a moment ago—I beg your pardon, not in the vicinity of 2, in the vicinity of 1.5, and then the answer you gave me a moment ago I thought you said that the gamma for the sound negative was about .5. Which was right? A. I do not remember that I said 1.5.

XQ191. I may have misunderstood that, but in your commercial production the gamma for the 381
sound negative was about 2, wasn't it? A. I believe I answered that question previously by saying that the slope of the straight line portion of the characteristic curve which indicated the degree of development of the sound negative was two, approximately 2.

XQ192. Now, look further down on page 114 to XQ170, the answer there is: "I mean from .1 to 1.2". That should be, should it not, "I mean from 1. to 1.2". XQ170. The decimal is in the wrong place in the transcript, is it not? A. Yes, that is correct; that is what I intended to say, 1.1 to 1.2.

XQ193. 1. to 1.2, isn't that it? Not 1.1? It should read 1. to 1.2? A. We are talking about slightly over unity, so it couldn't be 1.

XQ194. But your answer was from 1. to 1.2? A. If you read that in connection with cross-question 156, it would be very obvious, if you multiplied the figure 2 by .5 the product is 1, but I did not intend that that figure of 2 should be an exact figure. I said in the vicinity of the gamma of 2.

383 XQ195. I understand that perfectly. Will you look at XQ170. Is the answer as there typewritten correct? A. It is typewritten .1 to 1.2. That is not correct.

XQ197. What is the correct answer to that question? A. 1.1 to 1.2.

DEFENDANT'S PROOFS.

HENRY NONNENBACHER, called as a witness on
384 behalf of the defendant, having been duly sworn, testified as follows:

Direct Examination by Mr. Neave:

I live on East 175th Street, and am Building Superintendent for the Actinograph Corporation.

I have been connected with the motion picture industry since 1906.

I entered the employ of the American Mutoscope & Biograph Company in 1908, a motion picture producer. I was film superintendent, over in Hoboken, New Jersey.

Prior to that time I experimented as an amateur photographer, since 1885.

I then went over to Germany.

I studied there on the developing of plates and films. I came back to America, in the latter part of 1903. I brought back an agency for photographic chemicals. I continued that work for a little over four years. Shortly after 1907 I went to the Biograph, to supervise the developing of negative, printing and assembly or joining, as it was called.

The Biograph Company discontinued producing pictures in 1916. 386

I remained superintendent of the film laboratory until 1913. I stayed afterwards in their employ, however, as cameraman.

The Biograph produced a picture having the title "The Music Master," while I was superintendent of the film laboratory. That picture was released on the 6th of May, 1908. I had charge of the development of the films for that picture. These films are the two scenes from "The Music Master." These two are both original negatives.

I personally located these two pieces of film for use in this case. 387

They were stored when I found them in the laboratory at 176th Street, as we ran the Actinograph in the vaults of the Actinograph Corporation.

That vault is a film library of the former Biograph Corporation. I had charge of that film library at the time. Ever since 1908.

Mr. Neave: I offer those two negatives in evidence.

(Marked Defendant's Exhibit A in evidence.)

388 *Henry Nonnenbacher—For Defendant—Direct.*

The Witness: The Biograph Film Laboratory was continued after picture production ceased in 1916.

Q35. What did they continue to do? A. Commercial, for other producers.

This old book here, I recognize, it is a collection of little circulars and leaflets that were sent out over a period of years to the different distributors both in this country and foreign. Sent out
389 by the Biograph originally, and then later the Mutoscope Corporation.

There are a good many circulars in that book. Those were collected and bound up when they got to be that size, they were saved and put into books.

I always had this book in my charge.

The circulars in that book cover the period from March 2, 1907. I do not remember the dates. To March 30, 1911.

The circulars were printed before the picture was released. That book contains a circular for
390 this Music Master, the negative films of which have just been put in evidence.

Q44. I have here what purports to be a reproduction of that circular. Just compare it and see whether the reproduction is like the original. A. Yes, sir.

Mr. Neave: I offer in evidence that sheet, the Music Master. As part of the prior art.

Mr. Ward: Just as part of the prior art, not anticipation.

Mr. Neave: That is right.

(Marked Defendant's Exhibit B in evidence.)

The date of this circular, it is rather indistinct in my reproduction, is May 6, 1908. This circular uses the words "phantasmagorical portrayal of his thoughts." That means a vision. This description on this circular refers to the picture of which I have produced the negatives here as Defendant's Exhibit A.

Q48. Will you tell us how those negatives were made and printed? A. How the original negative was made?

Q49. Yes. There are two negatives wound on 392
the same roll in Exhibit A. A. The scene of the set was taken straight by the cameraman; and the vision was taken by using a mask in the aperture of the camera, and taking a second negative. That is all the camera had to do.

Q50. So far you have got two separate negatives? A. Yes, sir.

Q51. Then after getting those two separate negatives were they separately developed or not? A. Both separately developed.

Q52. And then after you got these two negatives what did you do with them? Did you print 393
one positive from them or two positives? A. We printed one positive.

Q53. How did you do it? Just describe how you did it. A. We took the scene of the set first on a special machine, and we had a glass slide which put a small dot so that it would not print.

Q54. Yes. A. (Continuing.) And one negative was masked with a grid; where we started a print it is negative completely. We rewound that film positive. In other words, the print took the scene in which had just a still part of the first mask. We ran that print through on that second negative where it had been mounted.

394 *Henry Nonnenbacher—For Defendant—Direct.*

Q55. So these two negatives were printed on one positive? A. Yes.

Q56. Consecutively? A. Consecutively.

The Biograph library contains no positive prints of the old negatives. They have to be destroyed after a given time. That was the practice at that time.

This is a print of the two negatives that you have just shown me.

Q61. That is the positive? A. That is the pos-
395 itive, made recently for us.

Q63. Does it clearly show how the two negatives— A. Yes, sir.

Q63. (Continuing.) —effected the one positive? A. Yes, sir.

Mr. Neave: I offer that positive print in evidence.

Mr. Ward: Objected to as irrelevant and immaterial.

The Court: Received. This is still to show the state of the art.

396 Mr. Neave: Yes, your Honor, just to show the ordinary practice of composite printing. They were two separately taken negatives, developed separately, and then printed on one positive film.

(Marked Defendant's Exhibit C in evidence.)

In those old days there was more than one set of positive prints made from the Music Master negatives at the Biograph Film Laboratory. A great many sets. 50, 75, and foreign orders would probably run to 100. Distributed both here and abroad.

By Mr. Ward:

XQ68. As I understand your testimony with regard to the two negatives that you have in evidence, they have nothing to do with sound pictures, just simply plain motion pictures? A. Yes.

XQ70. You took a motion picture camera and took a negative of an old scene or part of a scene, and these parts you took out first, what is that first negative? How did you take that? A. The 398
scene, that was taken full. The full scene was taken.

XQ72. Then was that negative developed? A. Yes.

XQ73. Then what did you do next to get this other negative that you show here accompanying it? A. They were both sent over at the same time from the studio.

XQ74. How did you take the second of these two negatives? How did you get those images on there? A. I did not take them. I was not the cameraman at the time. I had nothing to do with 399
it. I know how they were taken, but I did not take them.

XQ77. Tell us how you know. A. Because I was very well acquainted with the cameraman and was in touch with him right along. I did not see him take them.

XQ79. You only know what he told you? A. I know what he told me, and he gave me the proofs.

XQ80. All you know is that the cameraman took these and told you how he took them? A. Yes.

XQ81. And you got the proofs? A. Yes.

XQ82. Then it is just hearsay as to how they

were taken? You can only testify from what you heard that cameraman tell you? A. Yes.

XQ83. But your belief is that one negative was taken of the full scene, and then that after that there was some projection and another negative was taken of a part of the scene? A. Yes.

By Mr. Neave:

Q84. These two films, these two negatives came
401 to you to be developed at the same time? A. Yes.

Mr. Ward: I object to the witness' testimony on the ground that it is hearsay.

Q85. It is not hearsay that these two negatives came to you for development, is it? A. No, sir; they came to me to be developed.

The Court: You already have it on the record. He tells you it is hearsay, and it would be hard to pick it out and strike it
402 out as to the hearsay parts, but the answer is there.

Lloyd A. Jones, called as a witness on behalf of the defendant, being first duly sworn, testified as follows:

Direct Examination by Mr. Neave:

I live in Rochester, and am employed by the Eastman Kodak Company, as chief physicist in the research laboratory.

403

At the present time I am responsible for the initiation of research work in the Physics Department, for the direction of that work and general supervision of the work going on in that laboratory. I have been with the Eastman Company 20 years.

I received the degree of Bachelor of Science in Electrical Engineering at the University of Nebraska in 1908, and following that, I took two years of post graduate work, resulting in a degree of Master of Arts from the same university. After I received my master's degree and before I went to the Eastman Company, I went to the Bureau of Standards. During the first year of my service there, I worked under Dr. Middlekauff in the photometric division. My duties included the calibration of candle power standards, and research in other lines of photometric investigation. Then I was transferred to the optics section. And I worked there under Dr. P. G. Nutting, who at that time was a very eminent physicist in the field of optics. And under his direction, I worked at various optical problems, including microscopy, photomicrography, colorimetry, spectophotometry, and similar specialized work in the field of optics.

404

405

As to how I happened to go with the Eastman Company in 1912, in 1912, Mr. Eastman engaged Dr. C. E. K. Mees, an eminent British Scientist in the field of photography, to organize a research laboratory. And he came to the Bureau of Standards in order to obtain some one to take charge of the physics department, and he engaged Dr. Nutting. Dr. Nutting asked me to go with him as his assistant.

406 *Lloyd A. Jones—For Defendant—Direct.*

As to my experience with the Eastman Company and elsewhere since 1912, the character of work I have been doing,—during the first years of my service with the Eastman Company, I worked largely on photographic sensitometry. That includes the measuring of the characteristics of photographic materials; on the theory of tone reproduction on visual sensitometry, which includes the study of the way in which the human eye sees things; also upon problems of
407 illumination, particularly bearing on photographic work, also in colorimetry, or the measurement of color.

In 1915, Dr. Nutting resigned, and I became the acting head of the department and continued in that capacity until about 1916, when I was loaned by the Kodak Company to the Submarine Defense Association, which was a civilian organization endeavoring to find means of combatting the ravages of German submarines on American ships. My work with them was in the nature of protective coloring for vessels to make them
408 more difficult to see. When this country entered the war in 1917, I accepted a position, a commission as lieutenant, senior grade, in the United States Navy, and continued in the same general line of work, that is, the problem of camouflage.

After the war, I returned to my duties at the Eastman Kodak Company, and was given the position as Chief Physicist, and since that time, my work has been largely in the initiation of research work and direct supervision of that work.

I have made some contributions in that period, a number of scientific contributions to the art

of photography, especially in connection with tone reproduction in photography, tone reproduction is the one thing to which I have given a great deal of attention.

That work has brought me in contact with the motion picture industry quite closely.

My contact with the motion picture industry began in about 1918, and since that time I have been very closely in contact with many of the problems of the industry. I have spent some time in the laboratories where the films are 410
developed and printed, particularly working on the problems of standardizing the practice; also a considerable time in the motion picture studios where the pictures are taken, and my attention has been given mostly to problems of illumination, the way in which the set to be photographed is illuminated, the characteristics of the light sources that are used, the characteristics of the materials which they have to photograph.

I have also studied the problem of exhibiting the pictures to a certain extent, especially in theatres, and in that particular case, I have 411
devoted time to the devising of better methods of illuminating motion picture theatres.

Q15. What was your or the Eastman Company's interest that induced you to take up this motion picture work? That is, you were selling the film to them, is that it? A. No, I have never been in the sales department of the organization.

Q16. I mean your company was. A. The company, of course, is very interested in selling the film, and they are very interested in having the film and its products used under the very best possible conditions.

412 *Lloyd A. Jones—For Defendant—Direct.*

Q17. You are a member of a lot of learned technical societies, aren't you, I believe? A. Well, I am a member of several. I am a member of the American Physical Society, and the American Astronomical Society. I am a charter member of the Optical Society of America, and was for one term president of that organization, and I am a member of the Society of Motion Picture Engineers, and was for a time president of that organization and chairman of the Program Com-
413 mittee.

Q18. And you established the institute of applied optics at the University of Rochester? A. I participated in the establishment of that institute and am at the present time one of the governing board, or controlling committee of that institution.

Q19. Is the art and practice of photography quite old, or is it just recent? A. I should say it was quite old. It began in about 1800. I think it was in 1802 that Wedgewood succeeded in getting an image on sensitive silver salts, which,
414 however, were not permanent, and in 1822, Neipce made, I believe, the first permanent photograph; that was made on bitumen. And in about 1839, Daguerre introduced a process known by his name which consisted in taking a polished silver plate and sensitizing it by subjecting it to the fumes of iodine which formed a coating of silver iodide. This was then exposed, and developed by means of a exposing it to the fumes of mercury, it was then fixed.

Commonly called Daguerrotype.

In 1881 Scott Archer introduced the wet collodion process, and a little later Neipce St. Archer introduced the albumen process.

About 1870 Maddox, an Englishman, produced a gelatine bromide emulsion, and in about 1875, George Eastman, in this country, who was the pioneer, at least in this country, produced satisfactory dry plates. This was a great step in the perfection of photography, because prior to that time it was very difficult to make photographs especially in a portable way on account of the cumbersomeness of the apparatus. Then about 1880, Eastman succeeded in making a flexible transparent support out of cellulose nitrate, which has by this time almost completely replaced the glass which was previously used.

Q20. How long after Eastman produced that flexible film did the work on motion pictures begin? A. Well, work on the making of motion pictures had already begun when he produced that. As a matter of fact, the demand of the motion picture people who were working on motion pictures was one of the incentives, and in about 1893 or 1894, motion pictures, as we know them now, were successfully produced.

Q21. Those were short films, then, weren't they? A. Yes. At that time, of course, they made the very short films, 100 or 200 feet runs, and they were mostly in the nature of novelties, comedies, and they were exhibited first, of course, in small store rooms, and improvised theatres. Then a little later, they began making the longer pictures of 1000 feet, and following in about 1900, the industry took on quite a different character, and the films manufactured began to have real entertainment and dramatic value. From that time on, the growth has been very rapid and remarkable.

418 *Lloyd A. Jones—For Defendant—Direct.*

Q22. And the motion picture industry is one of the largest in this country now? A. It is one of the larger industries, yes.

Q23. Has the Eastman Company made and sold motion picture film to the motion picture industry from the very beginning? A. Yes, it has manufactured film ever since about 1890, I believe, and since that time, it has made enormous quantities which have been sold in this country and a large amount has been exported.

419 Q24. You have studied the patent here in suit, this Vogt patent? A. Yes, I have.

Q25. The first three paragraphs of this patent which have been read to the Court several times seems to indicate that the difficulties that these patentees thought that they were overcoming or were seeking to overcome was that the picture negative was necessarily, from the circumstances of its then production, over exposed in some parts and under exposed in other parts and as a result of that, and that not being the condition of the sound negative taken

420 at the same time, the patentees seemed to wish to have separate sound and picture negatives. Do you gather anything different from these first four paragraphs was the cause of the over exposure and under exposure of the picture negative that these patentees were going to get some advantage they thought by having separate negatives? A. Yes, that is the case as I understand the patent; the object of the invention was to provide different development treatments for the different picture scenes.

Q26. And that was because why, what was the disclosure, as you understand it? A. Be-

cause it was the usual thing at that time in the making of motion pictures to have over and under exposure between various scenes, and in order to correct for that certain practices of over or under developing were used.

Q27. Do you find the disclosure of any other thought as a basis for what is set forth there? A. No, I do not.

Q28. What width of film was used for transparent pictures prior to the advent of sound? A. 35 millimeters wide.

Q29. Has that width persisted for sound pic- 422
tures? A. Yes, that has been in common use for many years, almost universally.

Q30. Do you find disclosed in the patent in suit a positive sound and picture record on a film of standard width? A. No, I do not.

Q31. Could the film in Fig. 2 of the patent be reproduced on a standard motion picture projector? A. No, it could not. It is wider, obviously wider than the standard 35 millimeter film; hence would not run through the gate on a standard motion picture projector. Moreover, it 423
would require wider reels, deeper magazine and different side strips for the magazine and so forth.

Q32. Fig. 1 of the drawings, and the descriptive portion relating to it, seems to contemplate that the sound record should be made on one film, and the picture record on another film, and then they print from that onto a positive, that is it, isn't it? A. Yes.

Q33. What are the steps in that process? A. That process involves the exposure simultaneously of the sound and picture records, the sep-

arate development of those, and then the printing of those two onto a single positive film. The patent also—I think that is the disclosure.

Q34. Now, Fig. 3 of the patent seems to indicate that the sound and the pictures are to be taken simultaneously on one negative, and then the negative is to be split longitudinally and then separately developed, and then the printing on a positive. How many steps does that involve? More than the first? A. Yes, that involves
425 one more step than in the previous case. It involves the simultaneous exposure of the picture and the sound on the negative, the separating of the two records, the separate development and the printing into a single film. It also possibly involves the reuniting, in which case that would make a five-step process instead of a four-step process.

Q35. Are the sound records shown in all the figures of the drawings of the patent in suit of the variable density type? A. They are.

Q36. What other types exist? This is just
426 as a matter of general information. A. The variable area type.

Q37. In the variable area the sound record region looks sort of saw-toothed? A. That is correct.

Q38. In this variable density type, that is the principal one used now, is it? A. Yes, it is chiefly used.

Q39. I think you said in describing the process in connection with Fig. 3 of the patent in suit, you said that the two negatives were, or you said that after the one negative had been divided so as to make two negatives, then the

development took place, and that those two negatives could be united for printing on the positive. Take the two negatives of Fig. 1, after development they could be united for printing on the positive just the same, couldn't they? A. Yes, that is true, surely.

Q40. Is there anything that is definite at all that is meant in the photographic art by the term "character of development" or "character of treatment"? A. Yes, there is a very definite meaning to that.

Q41. What does that mean? A. That applies 428
to the factors of the developing process determined largely by the composition of the developing solution which control the character of the developed silver image, particularly its granular structure or its color. It also refers to the shape of the characteristic curve, that is, the differences in shape of the characteristic curve other than those which normally occur as a normal function or a normal behavior with increasing the time of development in a given developing bath.

429

Q42. We have been referring here from time to time during this trial to the characteristic curve of a photographic material, but I do not think we have had any precise definition of what is meant by that. What is that? A. The characteristic curve is that relationship which is obtained—well, I might express it qualitatively first: It expresses the relationship between the density, the gradations of density, and exposure which produced them for some particular fixed development treatment. I do not know if you wish me to define it more quantitatively or not.

Q43. No, I think not. Just give us some example of developments of a different character. A. Well, it is possible to compound developing solutions which will have a marked solvent action on the silver halide grains which compose the photographic emulsion. As a result of that solvent action, certain parts of these grains are dissolved away, and the resulting silver grain, after development, is smaller than it would have been otherwise. So that such a developer, we
431 normally refer to those as developers of the fine-grained type, or fine-grain character, produce imagines having relatively fine grain structure.

Now, other developers may be compounded so that they affect profoundly the color of the developed image. For instance, it is possible to obtain images which are distinctly yellowish or brownish or even reddish. By using different constituents in the developer, you can get bluish images. Moreover, there are certain things which can be added to a developer which will profoundly
432 change the shape of the characteristic curve, accentuating or suppressing the extent of the under-exposure region.

Q44. And those are examples of developments of a different character? A. Yes, they are.

Q45. Will you give me a specific example of a development process which abnormally and excessively emphasizes the density differences in the under-exposed region of photographic material? A. By extending the development time to a great value, for instance, 25 or 30 minues, it is possible to increase the density differences resulting from certain differences of exposure, in

the under-exposure region, or where the light has been relatively weak, where the exposures have been relatively low. If we do that, that is, give very long development times in an effort to enhance these differences in light and shade in that region, a fog usually develops to a very excessive extent, thus making the negative unsuitable for use.

Now, that fog can be prevented by the addition to the developer of some restraining agent, and one very commonly used is potassium bro- 434
mide, and by adding a large quantity of potassium bromide it is possible to extend the development time appreciably without getting any undue fog, and in that way enhance these differences of light and shade or of density in the under-exposure region, or on the toe of the so-called characteristic curve.

But when that is done the potassium bromide exerts a certain action on the character of the granular deposit of silver which is developed, causing the silver to be deposited in a more compact and finer grain structure. 435

Q46. It has appeared so far in this case that there is such a thing as a positive emulsion or stock, and negative emulsion or stock; what is the difference between the two? A. The term "negative emulsion or stock" is applied to emulsions which are very sensitive to light. In order to make them very sensitive to the light it is necessary to use fairly large-sized silver halide grains, and as a result of such materials, in addition to being very sensitive, they have fairly large or coarse-grain structures as compared

436 *Lloyd A. Jones—For Defendant—Direct.*

with other materials. This (the negative stock) is almost essential for making negatives in the studio where it is not possible to light the sets sufficiently to use slow or less sensitive materials; positive materials, on the other hand, are relatively insensitive to light, or as we say, slow, that is, of low speeds, but the grain structure is fine. They are normally materials of higher contrast, and are adapted to making prints because there is no lack of illumination or light. It is
437 easy to put a large lamp in a printing machine, and since they are fine-grained they give better results in the making of prints than would be obtained if we attempted to make prints on the negative materials, this grain structure being fine gives them the power of rendering fine detail to a much greater extent than the coarser grain materials.

Q47. Is that the reason that the defendant uses positive stock for its negative for sound? A. Yes, it is.

438 Q48. Because you can get finer lines on it for the sound lines? A. Yes, because it will render finer detail, and of course, the reproduction of sound, especially in the higher frequencies of sound, depends upon the rendition of very narrow lines.

Q49. In spite of the positive stock being slow, that is, comparatively slow, slower than the negative stock, you can use it for these fine lines which have to be photographed in a very short space of time, as I understand, you can use it because you have plenty of illumination for the sound, and that being the case, you can give a constantly good exposure for the sound, is that

it? A. Yes, with the equipment used it is possible to obtain adequate exposure.

Q50. You do not find anything in the patent in suit, do you, about using a different kind of stock for the sound negative film as compared with the picture negative film? A. No; I find no mention of that fact.

Q51. If the variable density sound record and picture record were both recorded on negative emulsion, would there be any advantage gained by developing one record with a developer of a 440
different character than that used for developing the other? A. The only advantage in that case would be the one mentioned in the patent, that is, of being able to develop the different picture scenes differently. If all of the picture scenes are correctly exposed, and if the sound record is correctly exposed, then the two could be satisfactorily given the same developing treatment.

Q52. As a matter of fact, does the disclosure of the patent in suit contemplate or does the object of the alleged invention as there stated re- 441
late to or having anything to do with sound and picture records in which the picture record, as well as the sound record, has been continuously normally exposed? A. No, it does not.

> Mr. Ward: I wish Mr. Neave would not lead the witness quite so much. I would prefer to hear what the witness has to say. He has been practically giving him the testimony right along.

Q53. Under what circumstances was machine development for the negative sound records taken

442 *Lloyd A. Jones—For Defendant—Direct.*

up in this country? A. Well, after the introduction of sound where the exposure of the sound record was normal or correct throughout its length, there was no need for differential treatment of the different parts as it previously existed in the case of pictures, and hence machine development was taken up as the best way of handling it.

Q54. And what is this machine development? A. In the case of machine development the film
443 to be developed is carred through a machine at a constant linear velocity. The film is looped over rollers and immersed in the developing tank, and since it is moved at a constant velocity every part of the film is in the tank for the same length of time, and therefore it receives the same development treatment, and as it passes from the development tank it is carried over additional rollers, through a rinsing bath, and into a fixing bath, and through a washing tank, and finally through a drying cabinet, where it is dried
444 under conditioned air and finally wound up on a reel. The process is a continuous one.

Q55. In that operation as you have described it, what opportunity is there to compensate for under-exposure or over-exposure by having over-development or under-development? A. There is no opportunity to compensate.

Q56. Are the picture negatives developed by a machine in that way now? A. Yes, they are.

Q57. What is it that has rendered that possible so that there is no over-exposure and under-exposure to be compensated for? A. Well, the conditions in the studios have been improved to the extent that it is possible for the cameraman to

445

expose all of their takes correctly. The better equipment for controlling the illumination in the studios has been developed. Methods for measuring the illumination have been devised. The cameramen have learned and been better educated to judge more precisely the amount of light that they have on their set and to adjust the settings of their cameras so that all the scenes are correctly exposed.

Q58. Before that modern practice was introduced, when you had over-exposure and under- 446
exposure, how was the negative developed? A. It was developed according to the so-called rack and tank method. According to that procedure the various scenes were separated from each other, and each one put on a separate rack; and these were then placed in a tank of developer or several tanks, and the operator would watch the course of the development. They were lifted out from time to time, and the image inspected, and by a judgment of the density and characteristics of that image, the operator decided when to remove it from the rack. 447

> The Court: You want a full record, I presume. I am familiar with the practice, but I do not know how far you want to go. I am familiar with this part.

Q59. Is the product which results from this practice of uniform exposure and machine development superior or is it inferior to the product previously obtained? A. It is superior to the old product, because while it is possible to correct to some extent for errors in exposure, as

448 *Lloyd A. Jones—For Defendant—Direct.*

under or over-developed negative is never as good as a correctly developed, correctly exposed negative.

Q60. Are the sound or picture records in the defendant's process both developed in the same type of machine? A. Yes, they are.

Q61. And in each of these machines, while subjecting the films to the developing process, the film travels through the machine at a uniform velocity, does it? A. Yes, this is the case.

449 Q62. Then upon what factors does the extent of development depend? A. It depends largely upon the time of development, and to quite an extent upon the concentration of the developing baths, its constitution; the temperature, and the agitation or the degree of stirring which is used.

Q63. It has appeared from one of the stipulations in the case just what developer is used by the defendant for the picture record, and the developer for the sound record; and it appears that the time of development for the picture negative is from 9 to 12 minutes, and the time of develop-
450 ment for the sound negative is from 4 to 5 minutes. Tell us why there is this difference in the times of development between two negatives. A. The negative developer is one of relatively low concentration. That is made intentionally low in order that the development time may be relatively long.

Moreover, negative film inherently is a slower developing material. It is desirable to have the time fairly long in order that the sulphite may assert its solvent action, and produce an image of relatively fine grain structure.

The positive film is inherently one which develops very rapidly. It is of fine grain material,

to begin with. On a fine grain material the solvent action is somewhat less than in the case of a coarse grained material. Since it is already a fine grain material it is not so important that the time of development, be long; and as a matter of practical convenience and expediency it is desirable to run it as fast as it is compatible with good results in order that the volume of film turned out by the machine may be relatively high.

Q64. Why is it that the time of development for the picture negative is given as from 9 to 12 452
minutes? Why is it not just 10 minutes? Why is there leeway there? A. Well, there are certain unavoidable variations, manufacturing variations in the manufacture of a photographic material; and one of those variations is the rate at which it develops.

Moreover, that rate at which a photographic film develops varies somewhat with the age of the material. If it is very fresh it may have one rate of development, and if it has been kept for some time after manufacture it may have a slightly different rate of development. 453

Moreover, the rate of development depends very profoundly upon the temperature, and while the temperature of the bath is controlled with great care, very small variations in temperature may affect the development time appreciably, and in order to compensate for these practical things it is necessary to have some tolerance in the development time.

Q66. Those reasons are also the reasons for the tolerance of between 4 and 5 minutes in the development of the sound negative? A. Yes, that is true.

454 *Lloyd A. Jones—For Defendant—Direct.*

Q67. These two developers that are stated in the record as being used by the defendant, one for the picture record and the other for the sound record, seem to contain, each of them, the same ingredients except that the developer for the sound record has in it some boric acid that is not present in the developer for the picture record. Why is that? A. The boric acid is added simply as a means of controlling the alkalinity of the developer.

455 Q68. The what? A. The rate at which the development proceeds depends upon the alkalinity of the solution.

In the case of the sound formula it is being used to develop a material which has an inherently high rate of development. It is desirable, in order to prevent the developing too rapidly the boric acid be added to reduce the alkalinity of the developer.

The alkali in a developer is an accelerator developing solution without alkali does not operate
456 satisfactorily; and the alkali is added to accelerate that action.

There is one other function which the boric acid performs. As the developer does the work in reducing silver halide to silver, the alkalinity tends to decrease, that is, the alkali is used up.

In the case of certain alkalies, they are rendered completely disassociated in the solution. All of that alkalinity is available, or most of it is available, instantly. They develop very rapidly, but they soon lose their power to develop because of this loss of alkalinity.

In the case of these two developers the borax

is the active alkali, and the borax is a relatively weak alkali. Moreover, it is not completely dissociated, and hence becomes available only as it is needed. We say that it makes a buffered solution, which simply means that it will hold its reducing power constant over a long period.

Now, that is very desirable, especially in the case of machine development, where it is desired to have the developer maintain a fixed power to do work over a long period of time in order to get a high uniformity of results. The addition of 458
boric acid increases that buffer action to a certain extent, so that it given a somewhat better controlled developer. It has no effect on the grain structure, and it has no effect upon the shape of the characteristic curve.

Q69. These two developers, the one used for the sound negative, and the other for the picture negative, while having in them the same chemicals, except the boric acid is added for the sound record, they are used in different proportions in the different developers; why is that? A. It is merely a question of practice. The adjustment 459
is made simply to control the rate at which development proceeds. In the case of the sound developer there is a larger proportion of the reducing agent used merely to give reserve power to do work.

Q70. Are the two developments obtained by the defendant with these different developers on the two negatives of the same character or of a different character? A. Developments of the same character.

Q71. What do you mean by that? Is it with reference to the ingredients of the developers

460 *Lloyd A. Jones—For Defendant—Direct.*

and their composition why the development is of the same character in both instances? A. Well, both developers contain the same components, with the exception of the boric acid, which, as I have explained, performs a function merely in controlling alkalinity and in buffering the solution.

Q72. Does each of the developers produce a deposit of the same granular characteristic or different granular characteristics? A. They are
461 practically identical.

Q73. The shape of the characteristic curve with each compares how? A. They are identical at equal contrasts.

Q74. What advantage, if any, could be gained by giving defendant's positive emulsion sound record a different character of development from that used for the negative emulsion picture record? Would there be an advantage, and if so, what? A. There would be no advantage in using different characters of development.

462 Q75. In the defendant's process are the sound and picture records developed to substantially the same or to different contrasts or gamma, using the developers and times of development which have been given in the stipulation? A. They are developed to substantially the same contrasts.

Q76. Is it the general practice or the unusual practice in light valve or straight line recording to develop the two records substantially to the same gamma or contrast? A. It is the general practice to develop to substantially the same contrast.

Q77. Professor Ballard seems to have pointed out that there is a 20 per cent. difference in the over-all gamma of sound and picture records. I would like to ask you whether a 20 per cent. variation of the over-all gamma in the picture record is an appreciable or an inappreciable amount? A. It is inappreciable. It is possible that it is detectable under the most favorable conditions, such, for instance, as if the two pictures were projected side by side in a laboratory, but certainly under practical conditions of pro- 464
jection in the theatre, the difference is inappreciable.

Q78. Is the 20 per cent. variation of the over-all gamma of the sound record appreciable or inappreciable? A. It is inappreciable. A variation as low as that introduces an imperceptible amount of harmonics into the sound as reproduced. The difference cannot be detected by most individuals. In fact, it is only measurable with precision instruments.

Q79. Can one develop the picture negative 465
satisfactorily in defendant's sound negative developer and also the sound negative satisfactorily in defendant's picture developer? A. Yes, that can be done.

Q80. How about the time—the times? A. Well, naturally, the time of the development will have to be adjusted to give the desired contrast in the two cases.

Q81. In the defendant's process what are the so-called advantages of recording the sound on a film separate from that on which the picture is recorded? A. It makes it possible to use a positive emulsion with its high resolving power, and

therefore obtain better rendition of high frequencies.

Q82. Now, will you tell us just what resolving power is? I always have difficulty in remembering my definitions. A. Well, resolving power may be described qualitatively as that characteristic of a photographic material which makes it capable of rendering very fine details. It is expressed quantitatively in terms of the number
467 of lines per millimeter which can be rendered thereon as distinguishable.

Q83. What is the resolving power of negative emulsion in the number of lines per millimeter? A. It is about 50 lines per millimeter.

Q84. And of the positive emulsion? A. About 75 to 80.

Q85. What advantage do you get by having more lines to the millimeter? A. Well, in the recording of sound it makes it possible to render the higher frequencies more satisfactory with greater naturalness, and less loss of loudness
468 or volume. It makes the sound as rendered under those conditions more natural.

Q86. Leaving for a moment this question of how many lines you can get on per millimeter, tell me what this photograph shows (handing to witness), or series of photographs on one chart? A. This is a series of photomicrographs. The upper two are made on Eastman positive film; and the one at the left, designated as "3" was developed in the defendant's picture formula.

The one at the right was developed in the defendant's sound formula.

This represents a recording of an 8,000 cycle per second constant frequency tone. An exam-

ination or a comparison of the two shows that the results are identical. The two photomicrographs at the bottom of the chart are made on Eastman supersensitive panchromatic motion picture negative film, the one at the left being developed in the defendant's picture formula, and the one at the right in the defendant's sound formula.

A comparison of the two again shows that the results are identical.

Mr. Neave: I offer that sheet in evi- 470
dence.

(Marked Defendant's Exhibit D in evidence.)

Q87. I show you another sheet that has on it two pictures. Will you tell me what that is? A. These tests were made to demonstrate that pictures of the same quality can be obtained by developing in the defendant's sound formula and picture formula. In making these, a master positive from a good motion picture negative was used as the original. Prints were made, contact 471
prints, from the master positive were made on the negative film. These were developed, the top one was developed in the defendant's picture formula, and the lower one in the defendant's sound formula. Times of development were adjusted to give the same contrast of gamma. From the negatives, from the resulting negatives obtained in that manner, enlargements were made under identical conditions on the same kind of bromide paper, and the development conditions being identical in the two cases. They are shown to demonstrate that the two formulae gave the same quality.

472 *Lloyd A. Jones—For Defendant—Direct.*

Mr. Neave: We offer that sheet in evidence.

(Marked Defendant's Exhibit E in evidence.)

Q88. Have you the negatives from which these photographs on Defendant's Exhibit D were made? A. No, I have not. They are in Rochester. They can be obtained.

Q89. You could have them here tomorrow. Can you telephone up for them? A. I think probably
473 we could have them here tomorrow.

Mr. Ward: I would also like the negatives from which Exhibit E was obtained.

Q90. Will you try to get those also? A. Those are the pictures?

Q91. Yes. A. Yes, I think I can have them here tomorrow.

Q92. If you will remember as soon as court closes to telephone down for them.

474 Mr. Ward: Your Honor, may I reserve an objection to the Exhibits D and E, subject to the production of the negatives from which they were made?

The Court: All right.

Q93. I hand you another sheet which has some curves on it. What do they indicate? A. These curves show the frequency characteristic of the negative and positive emulsion. They were made by recording various frequencies of constant pitch—of constant frequency on the negative emulsion—and on positive emulsion; and then

475

measuring the volume loss. The various frequencies, the one marked "positive emulsion" shows the amount of loss as frequency increases; and the one marked "negative emulsion" shows the amount of loss of the recordings made on the negative emulsion. The frequencies are plotted horizontally as abscissa values, and the ordinate scale is in decibels. The decibel being a unit in which sound intensity is expressed.

It will be noted, for instance, that at any frequency we may select, for instance, 6,500 cycles, that there are three units, three decibels loss for 476
positive film; while for that same frequency the loss for the negative emulsion is about 9½ decibels—pardon me; that is incorrect. The loss at 6,500 cycles on positive emulsion is 3¼ decibels; and the loss at 6,500 cycles for negative emulsion is about 9¼. The difference is 6 decibels, which means that the sound intensity as recorded on negative film is one one-quarter as great as that recorded on positive film at that frequency.

Mr. Neave: I offer that chart in evidence.

477

Mr. Ward: Do you propose to offer the data from which the witness made those charts in evidence?

Q94. Have you the data from which you made those charts or on which those charts were made? A. No, I did not make those measurements. Those measurements were furnished to me by Dr. Wente.

Q95. Have you made yourself measurements of this same character? A. Yes, we have made many measurements of the same character in the laboratory in Rochester.

478 *Lloyd A. Jones—For Defendant—Direct.*

Q96. Have you made some of those measurements yourself A. I have not made them personally. Men under my direction have made them.

Q97. And have you drawn curves to those measurements? A. Yes.

Q98. Is this curve that I have just now offered in evidence characteristic—I don't like the word "characteristic"—illustrative? A. Yes.

Q99. Of the various curves that you have made? A. Yes.

Q100. Although they might vary a little bit?

479 A. It is illustrative. I am quite unable to say that they actually may be quantitative, but they are of the same order, of the same general type.

Mr. Neave: That is what it is introduced for. It does not prove extreme accuracy.

Mr. Ward: Will you state specifically what it is introduced for?

Mr. Neave: To show the characteristics generally of positive and negative emulsion, and to indicate the reason the defendant uses the positive emulsion for the sound record.

(Marked Defendant's Exhibit F in evidence.)

Q101. Will you define what is meant by combination or composite printing? A. The term is applied to the making on a single piece of photographic sensitive material prints or impressions from two or more separate negatives.

The prints may be made side by side on such material, or they may be made in superposition in such material, or they may be made in opposite faces of such material. The general word

combination printing covers that entire class of operations.

Q102. You previously testified that the art of photography is quite old, and you referred to certain outstanding developments in the early days of photography. How old is the art of composite printing? I do not care exactly. A. Well, it is almost as old as photography. It is very old. It has been practiced for many, many years.

Mr. Neave: It is agreed that the En- 482
cyclopaedic Dictionary of Photography by Woodbury, published by the Scovill & Adams Company of New York in 1896, contains the following definition:

"COMBINATION PRINTING: A method of printing in which the whole or portions of two or more negatives are combined."

It is agreed that Wilson's Cyclopaedic Photography, published by Edward L. Wilson in New York in 1894, contains the 483
following definition of Combination-Printing:

"A mode of printing by which the positive is obtained by the help of two or more negatives. In printing from the first negative, those places which are to be obtained through the second, are stopped out, and when printing from the second negative, the parts already printed are protected. It is made use of when a portrait is to have a different background or clouds are required in a

landscape with white sky, etc. The simplest form of combination-printing is the combining of a separate cloud negative with a cloudless landscape negative, to produce a print of the landscape with cloud effects as if the whole had been secured with one exposure. Similarly, groups of persons can be combined in one print from separate negatives of each person, a suitable background be-
485 ing required as the basis; or figures may be inserted in landscapes as required, etc. The usual method of procedure is to carefully block out in the origial negative the space required for the insertion of the figure, clouds, etc., and having obtained a print in this way, to print in the detail from a second negative in which only the figure (or clouds) is allowed to impression the print. Care and patience are required for this work, by which beautiful and in-
486 teresting results may be obtained."

It is agreed that in Cassell's Cyclopaedia of Photography, edited by Bernard E. Jones, published by Cassell & Company, Ltd., in 1912, it contains the following under the head of "Combination Printing":

"The art of making a print by the use of two or more negatives. The simplest form of combination printing is the printing of a cloud into a landscape, but combination printing proper is the art of adding trees, figures or other ob-

jects to a picture, as practiced by Rejlander, Robinson, and other past masters of the art. Combination printing had its origin in 1855, when Berwick and Annan, of Glasgow, exhibited a picture printed from two different negatives—a figure in a landscape. In 1858 Sarony patented an improved process which consisted of taking up the different portions of the collodion film from the glass of one or more negatives and 488 laying them down upon another glass in their proper relative positions and printing from it. Rejlander, however, was the first to draw attention to the possibilities of combination printing, and in 1857 he used thirty negatives to produce a single picture ('The Two Ways of Life'), which he exhibited at the Manchester Exhibition of that year; all except the part required was blocked out on each negative, all the negatives were then laid in turn upon sensitive paper 489 and printed, the remainder of the paper being covered with black velvet. In the following year (1858) Robinson produced the first of his famous series of combination prints, 'Fading Away', for which five negatives were used, and in 1863, 'Bringing Home the May' (nine negatives); this type of combination printing then became the craze.

"The methods fully described under 'Clouds, Printing in', may be adopted in some forms of combination printing, but in others, such as the addition of a fig-

ure to a landscape, or the substitution of a suitable background for an unsuitable in a figure subject, a different method will be more fitting (see, for example 'Backgrounds, Printing in'). In many cases, however, the pencil and brush marks described under the heading first given above will be found useful in securing registration.

"For combining portions of two or more negatives to form one print, whether the object is to print a new background to a figure or to combine in one picture selected parts of two or three landscapes, etc., the method described under the heading, 'Backgrounds, Printing in', or some modification of it, can be adopted. In some respects the method about to be described has points of advantage compared with that given in the reference last mentioned. A silver print is taken from the figure negative, and the figure cut out very carefully with a sharp knife. Both parts of the print must be kept to form masks. First, the portion from which the figure was cut should be attached to the glass side of the figure negative, and then the two negatives should be held together vertically with their edges resting on the table and the corners accurately coinciding, or preferably placed on a retouching desk with their corners together. The figure negative must be underneath and the glass side of each negative towards the worker. The figure that was

cut from the rough print must now be attached to the glass side of the background negative in such a manner that it corresponds in position accurately with the opening in the mask on the figure negative, this opening being easily seen for obtaining a correct adjustment by this method of holding the two plates.

"In printing, it is immaterial which negative is used first. Either negative is placed in the printing frame with one 494
edge in close contact with the woodwork of the frame—preferably the edge that was resting on the table when the masks were adjusted on the negatives. In the diagram the edge AB is shown pressed closely against the frame, the corner being pressed right into that of the frame. The printing paper need not be cut accurately to fit the negative, but it must touch the same side and the same corner of the frame as the negative. The paper is indicated by dotted 495
lines. When this part of the printing is finished, the print and the negative are removed from the frame, and the second negative is placed in the frame with its corresponding side and corner pressed closely against the side and corner A. B."

It is also agreed that a book by Konig, published in London by Dawbarn & Ward, Ltd., with a preface dated 1906, contains the following, on page 36: This relates to the title of the book, "Natural Color Photography."

"When one has decided to work with only one kind of plate, should all three exposures be made on one long plate, or should three separate plates of the same kind, be used? The former plan presents a certain convenience for the expert; but so long as one is not absolutely certain of his factors, it will often be necessary to develop one or other of the individual exposures somewhat longer,
497 or harder, or possibly softer. Such individual treatment of each exposure is obviously impossible when all three exposures are made on one plate."

By Mr. Neave:

Q103. Does the process of the patent in suit involve any photographic operations which are not involved in the ordinary art of composite printing, and if it does involve some additional operations, tell us what they are? A. It involves nothing other than that known in the art of com-
498 posite printing.

Q104. How about in composite printing using and subjecting the two negatives to different lengths of development? Was that done or was it not done? A. Very common.

Q105. Did you do that composite printing yourself prior to April, 1921? A. Yes, I have often made prints, printing in clouds into landscapes without the clouds and other types of composite printing. It was commonly used in pictorial photography.

Q106. How early did you do that? How far back did you do that work yourself? A. Oh, I imagine about in 1900.

Q107. And the Eastman Company, did it have any experience, so far as you know, with composite printing prior to April, 1921? A. Well, of course, the art and practice of composite printing has been so general that the Kodak Company has made materials which have been used for that purpose, in many cases special materials for the practice of combination printing.

Q108. Now, will you state the steps involved in making composite prints such as you did them prior to 1921, and such as Eastman did them 500 prior to 1921, beginning with the making of the separate records? A. Well, two or more negatives are exposed, either on the same or different objects. These exposed negative materials are then developed separately in such a way as to give images of the character required for the subsequent operation of making the combination print. These are then printed together on a single piece of photographic material. They may be either adjacent, juxta-posed, or superposed, in register, on the same face or on opposite faces, as the case may be. There are any number 501 of possibilities of combining the negatives in making combination printings.

Mr. Ward: May I ask a question in regard to this printing of composite prints?

Mr. Neave: Surely. Go ahead.

By Mr. Ward:

Q109. It is my understanding that all of this testimony you are giving in regard to this printing of composite prints relates entirely to pictures, has nothing to do with sound pictures? A. That is the case.

502 *Lloyd A. Jones—For Defendant—Direct.*

By Mr. Neave:

Q110. It does not make any difference if they are separately developed, this composite printing? A. Yes, they were.

Q111. Each negative is clearly appropriate to itself? A. Yes.

Mr. Neave: I offer in evidence a volume entitled, "Defendant's Book of Prior
503 Patents", containing the following patents:

UNITED STATES PATENTS.

125,522	Bendann, *et al.*	April	9, 1872
606,993	Jenkins	July	5, 1898
1,186,717	Walker	June	13, 1916
1,254,684	Greensfelder	Jan.	29, 1918
1,260,337	Craig	March	26, 1918
504 1,286,383	Messter	Dec.	3, 1920
1,335,651	Bullis	March	30, 1920
1,489,314	DeForest	April	8, 1924
	(Filed July 16, 1921.)		

BRITISH PATENTS.

21,467	Rossi	1909
23,620	Rosenberg	1911
6,727	Downing	1913
18,163	Kindermann	1913
115,942	Pedersen	1918

GERMAN PATENTS.

275,551 (and translation) Thornton 1914
279,598 (and translation) Reimer 1914

FRENCH PATENTS.

448,757 (and translation) MacCarty 1913

(Marked Defendant's Exhibit G in evidence.)

506

By Mr. Neave:

Q112. Will you please refer to the Bullis patent No. 1,335,651, which is item No. 7 in the Book of Patents, which has just been offered in evidence—

Mr. Neave: I will state that those patents in the volume not set up in the answer, are not relied upon as anticipation, but simply to show the state of the art.

Mr. Ward: May I state that the patents 507
not set up in the answer, as I understand it, even though they are contained in this volume are the British patent to Rossi, No. 21,467 of 1909, Rosenberg British patent, 23,620 of 1911, and the Thornton German patent, 275,551 of 1914, and the MacCarty French patent, 448,757 of 1913.

The Court: They are to show the state of the art, and not for anticipation.

Q113. Mr. Jones, referring to this Bullis patent, which is entitled, "Talking Picture Appa-

508 *Lloyd A. Jones—For Defendant—Direct.*

ratus," what does this patent disclose concerning the simultaneous photographic recording of sound and picture records on separate films? A. It discloses that the sound and picture records are recorded simultaneously on separate films.

Q114. That is, on separate negatives? A. Yes.

Mr. Neave: Your Honor will note what is stated at page 1, line 12 of the patent to Bullis.

509

Q115. Now, does this Bullis patent or does it not contemplate giving the picture and the sound negative the length and character of development and treatment which may be appropriate for each? A. It contemplates giving them the separate and appropriate treatments.

Q116. And does the patent also state that the same emulsion may be used for both sound and picture? A. Yes, that is the case, it does.

Q117. And there may be the same emulsion or different emulsions? A. Yes, either the same
510 or different emulsions.

Mr. Neave: That, your Honor, is on page 2, line 58:

"The picture film 10 and sound film 11 are made separate and distinct from each other and may be treated with the same emulsion, or with different emulsions, as found necessary to obtain the best results."

Q118. What is Bullis' method of synchronism between the picture and the sound mechanism in

recording? A. They are driven through the camera during the recording of the sound and picture by a sprocket, as shown in Fig. 7, which is made so that it will carry both the film on which the sound is being recorded and the film on which the picture is being recorded. They must necessarily stay in synchronism.

Q119. Then there is some kind of a numbering strip used. What was that for? A. Yes, as shown in Fig. 2, No. 13, a numbering strip is employed which carries a series of numbers or 512
characteristic marks that are impressed upon the sound and picture films during exposure and on subsequent development become visible.

Q120. This patent states that the sound record and the picture record may be handled separately and developed, and then it says at lines 41 to 43 on page 1: "And subsequently joined together so as to produce a single film if such is desired." What do those lines that I quoted mean to you? A. Well, it means that he contemplates either uniting these films to form a single film, a single sound and picture positive, or using them sepa- 513
rately.

Q121. What specific methods of uniting are shown in this patent for reproducing? A. He mentions pasting or cementing as one method.

Q122. And that is the specific thing shown in his drawings? A. No; the specific thing shown in the drawing is that the two films are run over the same sprocket, which contains three rows of sprocket teeth, and this sprocket thus carries on two films in the united and synchronous position.

Q123. So that the two films there act as a single film in reproducing? A. So far as reproducing, yes.

514 *Lloyd A. Jones—For Defendant—Direct.*

Q124. Will you refer to the Walker patent, which is item No. 3 in this book of patents? What does it disclose as to the printing of the sound record and the picture record onto a single positive? A. It discloses that the sound and picture records are printed on the same positive film strip.

Q125. Simultaneously or consecutively? A. Consecutively.

Q126. And is the positive film which is thus printed with the impression of the two negative
515 films one of standard width? A. Yes, it is.

Q127. And that is shown in Fig. 8 of the patent, is it, on sheet 3 and there marked— A. Yes, that is shown in Fig. 8, the sound track being designated as 31A.

Q128. And the recording apparatus of this patent, was that a combined camera and sound recorder, or are there two different instruments for each work? A. No; as shown in Fig. 1, the recording equipment is a combined picture and sound recorder.

516 Q129. And is the sound recording of the variable density type or of the variable area type? A. It is of the variable density type.

Q130. What is shown in Fig. 6, just generally? A. Fig. 6 shows a combined sound and picture reproducing equipment.

Q131. And what does Fig. 7 show? A. Fig. 7 shows the printing machine or device which is used in printing the sound and picture records carried on the negative onto the final positive.

Q132. What is the functional difference, if any, between printing consecutively the picture record and the sound record on the single positive

films as disclosed in this patent, and printing consecutively the separate sound and picture records on a single positive film as disclosed in the patent in suit? A. There is no functional difference.

Q133. And whatever difference there is, is what? A. It is merely that in the case of the patent in suit, the sound and picture record are printed from separate negatives, and in this case from a single negative.

Q134. Now, will you turn to the Craig patent, 518
which is item No. 5 in this book of patents? What does it show as to the simultaneous recording of sound and picture records on separate films? A. This patent discloses the simultaneoue recording of pictures and sound on separate films.

Q135. And that is simultaneous, is it? A. That is simultaneous.

Mr. Neave: Now, your Honor, this patent discloses the printing of a separate sound and picture record on the same positive, this being stated on page 4, lines 113 519
to 120, where it is said:

> "It will be noted from what has gone before that so far the negative of the sound record and the negative of the picture record have been made upon separate strips of film. It is necessary, therefore, that these two negatives should be photographically printed upon one film or upon opposite sides thereof."

Q136. Now, what is your understanding of this last sentence that I have quoted? A. It indi-

520 *Lloyd A. Jones—For Defendant—Direct.*

cates that Craig contemplated printing the sound and picture records onto the same film and either upon the same faces or upon opposite faces.

Q137. Does Craig show in any of his figures the two records printed on the same side of a single positive? A. In Fig. 8 he shows two sound records printed on the same face of a single positive film.

Q138. Alongside of each other? A. Alongside of each other.

521 Q139. There is a plurality of sound records upon one side of the film? A. Yes, there are two, and the patent indicates that he might use more.

Q140. What advantage would there be in having two sound records on the same film? A. It would make it possible to use two loud speakers in reproducing, the records having been made from microphones placed at different parts of the set or stage.

Q141. Now, what is there in the Craig patent with reference to more than two records being
522 recorded on the same film? A. Well, it states that more than two may be recorded if desired, a plurality of records may be recorded.

Mr. Neave: Your Honor may note, as a matter of interest, that referring to Fig. 7, Craig states on page 2 at line 106 that: "Fig. 7 is a view of a composite film showing the position of the sound records with relation to the pictures." And also in a number of the claims a composite picture and sound recording film is referred to.

Q142. Do you agree, Mr. Jones, that this that is spoken of in the Craig patent is composite printing? A. Yes, it certainly is.

Q143. Now, Craig also specifies, does he not, that he may print a sound record or records on one side of the film and his picture record on the other side? A. Yes, that is the case.

Q144. What is gained by that? A. Well, there are certain advantages to be gained by such procedure. In the first place, it eliminates the necessity of using up some of the space on the picture 524
side of the film, thus making it necessary to reduce the size of the pictures; it also enables him to use a wider film sound record than would be feasible otherwise.

Q145. On the defendant's film in this case, the film is of standard width? A. Yes.

Q146. And the picture part is cut down from what it used to be, it is made narrower? A. Yes, that is the case.

Q147. So as to permit the sound being there? A. Yes.

Q148. Is there any advantage in having the 525
full width, such as Craig has for his picture and a full width for his sound? A. Yes, there are some advantages in that procedure. By using the full space for the picture, it is not necessary to use such high magnification in projection, that is an advantage, and the wider sound track has some advantages.

Q149. Does it appear from this Craig patent whether the sound record and the picture record are each recorded on negative emulsions, or are the emulsions of a different character for the two? I think that is referred to on page 4, line 56? A. Yes, the patent states definitely that the

526 *Lloyd A. Jones—For Defendant—Direct.*

records are taken on an ordinary negative motion picture film.

Q150. What was the practice in the motion picture industry in 1913 as to the development by means of the rack and tank method of different sections or takes of the picture record to correct under and over exposure? A. It was customary to develop those takes differently to compensate for any errors of exposure that may have been made in the photographing of the dif-
527 ferent scenes.

Q151. Was it necessary at that time to make such corrections in the picture record? A. Yes, it was.

Q152. Do you happen to know who owns this Craig patent? A. The Eastman Kodak Company.

Q153. What does Craig disclose in order to obtain the sound record on one side of the film overlying the picture record on the other side without having one record interfere with the other record in the reproduction? A. He discloses a method for printing the sound record so that
528 it will be reproduced by the use of invisible light or invisible radiation. There is radiation of wave lengths shorter than the visible and also longer than the visible region, which, of course, has no effect upon the eye, and therefore would not interfere with the quality of the picture. And by forming his sound record in some material which has absorption in one of these invisible regions, he is then able to modulate that radiation and cause a reproduction of the sound without interfering with the image thrown on the picture screen.

Q154. How does he print the two negatives on this positive, one on one side and one on the

other side of the positive? A. He prints them consecutively, using a material which is double coated, that is, has a sensitive coating on both sides. He prints the picture on one side carrying an ordinary positive emulsion, and on the other side, he prints the sound which carries a special coating, giving him the sound modulation in invisible radiation.

Q155. Why do not those two interfere with each other? Are the emulsions on both sides of the positive all the time? A. Well, the picture 530
can be finished first, and then after that, the other side of the positive film can be coated and sensitized and the operation of putting the sound on that carried out later.

> Mr. Neave: Your Honor, in the prosecution of the application for the patent in suit, the patentees apparently endeavored to distinguish this Craig patent from the alleged invention in suit, stating that Craig's only object in making the two negatives on separate films was apparently convenience, in that he wanted to print on 531
> opposite sides of a positive film, and it would be easier to do that when the sound and picture records were on separate films.

Q156. Mr. Jones, is that statement that I have just quoted justified in your opinion or not? A. No, it is not.

Q157. Why not? A. Because Craig's chief object in doing as disclosed in this patent is to obtain the records so they do not interfere with each other, preserving the full width of the film for the picture, and obtaining a wide sound record.

532 *Lloyd A. Jones—For Defendant—Direct.*

Q158. Do you know anyone else beside Craig who has done work along those same lines in employing a sound record which will transmit ordinary light but which will obstruct lights which are beyond the visible spectrum? A. Yes, the Gaumont people in France have disclosed such a method. It was described in the British Journal of Photography, March 15, 1929, and they used the ultra-violet region, rather than the infra-red, as proposed by Craig. They proposed
533 using a coating on the back of the positive film which can be sensitized by the well known bichromate process, and printing and developing in the usual manner for such a sensitive coating which will obstruct the ultra violet radiation. Then they use the ultra violet light radiation which is invisible to the eye for reproducing the sound.

Mr. Ward: I would like to know whether Gaumont is set up as anticipation. It is not pleaded.

Mr. Neave: That is all I am going to
534 say about that. He is just mentioning that as an illustration.

Mr. Ward: Are you putting it in to show it is possible to have a picture record and a sound record on opposite sides? Is that all you are putting it in for?

Mr. Neave: Yes, if it may be desirable.

Mr. Ward: Not as an anticipation?

Mr. Neave: No.

Mr. Ward: Then it has nothing to do with the suit.

Mr. Neave: It has something to do with the suit but not as anticipation.

Q159. What is the width of the sound track on the sound record that is used on Defendant's film, about 100 mils.? A. Approximately.

Q160. What advantage is there in having a sound record that is wider than that? A. By using a record wider than the present standard, it is possible to average up or integrate certain of the granular structure which is in the sound record, and therefore minimize the disturbance which is known as ground noise. This disturbance arises from several causes, one of which 536
is the grainy or granular structure of the image, and others, scratches and various imperfections on the surfaces of the film, namely, the sound track. Now, if the record is relatively narrow, a small irregularity produces a large percentage effect when it passes the scanning line or scanning slit of the reproducer. If that scanning line or slit is longer, the same size of disturbance produces a smaller percentage effect upon the radiation transmitted by the slit, and falling upon the photo-electric cell, and thus a wider sound track tends to minimize many of these disturbances, 537
giving a quieter and better reproduction.

Q161. In the sound and picture records of the films such as the defendant is using it appears that the sound record is photographed on the film in a track which runs along parallel with the picture record on the same side of the film. Now, were there other means of impressing a sound record on the film running parallel with the picture record, and will you look at the Pedersen patent, and tell us what that is, by what manner they impress the sound record on the film? That is item No. 13, British Pedersen patent? A. British Perdersen patent.

538 *Lloyd A. Jones—For Defendant—Direct.*

Q162. What is the character of the sound record? A. In the case of the Pedersen patent the sound record was recorded in the form of a wavy line. That was accomplished by actuating a small diaphragm carrying a small aperture. This diaphragm is actuated by the currents coming from the receiving or the pick-up device, so that it moved laterally, while the film was traveling through the recorder. This caused the exposure of the film in the form of a wavy line, depend-
539 ing upon the sound which was being recorded. And after development, of course that came out as a black wavy line on the negative.

Q163. And that sound was recorded simultaneously with the recording of the pictures by photographic methods? A. Yes, that was recorded simultaneously.

Q164. And that sound wiggle ran along down the edge of the film as our sound record does in the defendant's? A. Yes, in this case.

Q165. In this Pedersen record, after the sound record has been transferred to the metal strip or
540 thin metal band, are the sound and picture records on separate bands, or the same band? A. They are on separate bands.

Q166. Are those separate records printed on the same positive film? A. Yes, they are.

Q167. Is the negative picture record developed alone in a manner appropriate to it? A. No; the negative picture record is developed in the usual manner, and the sound record, after transference, after having been printed on the thin metal strip, is developed by a special technique of a photo mechanical nature, the bichromated fish glue process.

Q168. Two different kinds of treatment for the two records? A. Yes.

Q169. Are these two records printed consecutively or simultaneously on the same positive film? A. They are printed consecutively.

Q170. Is it done on two positive films of different character or of the same character? A. It is all of the same character in the positive film.

Q171. Do you know whether records of this type such as the Pedersen patent have been ap- 542
plied in motion picture films practically? A. Yes, that process has been developed to quite an extent, and some very fair quality of records have been made in similar manner.

Q172. Will you tell me whether or not the cellulose base of positive film is a suitable medium on which to print a sound record of the phonographic type such as Pedersen? A. Yes, it is a very suitable material for use in the embossing type of printing which is required in making this type of photographic record.

Q173. Was the cellulose base of this type in 543
general use in 1917 when the Pedersen application was filed, or did it come into use only later? A. No, that is the same material that has been used the last 30 years in making phtographic film.

Q174. Have disc phonograph records been made on this cellulose base? A. Yes, they have; quite recently some very excellent records have been made in this manner in the Bell Telephone Laboratories.

Q175. Now, will you turn to the Greensfelder patent, item No. 4 in the book, and tell us what

544 *Lloyd A. Jones—For Defendant—Direct.*

that record is and how it is made? A. Greensfelder makes a sound record by photographing sound marks on a negative film. These marks are made by the actuation electromagnetically of diaphragms which cause the light to act upon the film from time to time.

Q176. The picture record is taken on one negative, is it not? A. The pictures are recorded on one strip of negative film, and the sound records are recorded on another length of negative film
545 separately.

Q177. Then they are both printed on the same positive? A. After development they are printed onto the same positive film.

Q178. Tell us briefly how the sounds are reproduced from the sound marks of the Greensfelder patent? A. After printing the sound marks which, of course, on the negative are narrow black lines, and are represented, as I said, on the positive film by narrow transparent lines, the film in going through the reproducing equipment controls the light which passes through a series
546 of small diaphragms, and when one of these transparent marks comes into proper position the light from a suitable source falls upon a selenium cell which then actuates electromagnetically the sound-reproducing mechanism on each.

Q179. In Fig. 3 of this Greensfelder patent, the picture record is easily seen and the sound record is those vertical lines in the space between the two pictures? A. Yes; in Fig. 3, the sound record lines are indicated as 3 on the figure. They lie between consecutive pictures.

Q180. Now, what is the difference, as compared

with that, and what is shown in Fig. 5? It looks as though the two records were parallel there side by side. A. In Fig. 5, he produces the final sound and picture print on double width film. The picture sequence is shown at the right hand of the Fig. 3 between the adjacent rows of perforations and at the left is the sound record. In this case the transparent lines are elongated and the whole record lies side by side with the picture record.

Q181. And Fig. 5 shows one positive film, does 548
it, of double width? A. Yes, that is the case.

Q182. And how do the negatives get onto that film? A. The picture negative is printed onto this film in one operation, and then later the sound records are printed on from its own sound negative; consecutive operations.

Q183. Here in this Greensfelder patent is the picture record and the sound record on the same side of the film, or are they on different sides of the film? A. They are on the same side in this case.

Q184. By "side" I mean "face." A. Yes, on 549
the same face.

Q185. I think you have said that in this Greensfelder patent there are separate negatives, one for the sound and one for the picture. Are they developed separately before printing? A. Yes, they are developed separately.

Q186. Let me ask you, Mr. Jones, could any advantage be obtained by developing the sound and picture records of the Greensfelder patent differently? A. Yes, there could be certain advantages obtained by doing that. The sound marks, of course, should be developed to a high

density, but at the same time not sufficiently high to cause any undue spreading of the image. If an exposed negative is forced in developing, fine lines tend to become wider. It might be very undesirable in the case of a record of this kind, so the sound negative record should have a proper development treatment.

Mr. Neave: Your Honor, during the prosecution of the application here in suit, the patentee stated, with reference to this
551 Greensfelder patent, that in Greensfelder, "there is no need of developing the sound marks and pictures in any different way from each other, because of the fact that his sound marks are composed of entirely translucent rectangles having no gradations which must be properly brought out in the developing."

Q187. Do you agree with that quoted statement that I have just read? A. No, I do not.

Q188. Why not? A. At that time, in the making of pictures, it was very customary to en-
552 counter improper exposure, and to compensate for this incorrect exposure, it was customarily to develop different parts, different takes, different scenes to different extents. For instance, a scene which had received under exposure would be forced in development in order to bring up the density difference to the desired value.

Now, if the sound record, as made by this method, were attached to such a picture record, and therefore had to receive the same development, it is almost certain that this forcing in development would cause a broadening of these lines, and that would be undesirable.

Q189. Now, will you refer to the British Kindermann patent of 1913— Will you tell us briefly what that discloses? A. This patent discloses the simultaneous recording of pictures and sound on a photographic material to the edge of which was attached a thin metal strip, coated with wax, and an engraving tool or stylus was actuated by the sound-pick-up mechanism so as to cut a wavy line in this wax coating, thus exposing the metal of the strip, and after recording the sound picture, the sound and picture records were sep- 554
arated by removing the metal strip from the picture negative film. The two were then developed separately, and in that way records of the sound and the picture were obtained.

Q190. Does Kindermann separate the sound and picture records? A. Yes, as I have stated, after exposure, the part of the record carrying the sound—the part of the film carrying the sound was separated from that carrying picture.

Q191. And then are the two negatives developed separately? A. They were developed separately— 555

Q192. And differently? A. And by quite different operations. The picture record was developed in the usual manner and the sound record was treated by an etching process, so that a line, a shallow depression, was produced in the metal strip.

Q193. Now, will you refer to the Reimer German patent which is item 15 in our book of patents? This patent is for a process for the making of a film which consists of an image band and a sound band. Describe briefly what that process was. A. In this case, the picture and sound were recorded on different media or materials, the

picture being photographed in the usual manner and the sound record being made on a material of the phonographic type, a disc or cylinder.

Q194. And did you say those are made simultaneously but separately? A. They are made simultaneously, but on separate materials.

Q195. And then what do you do to get positives? A. The picture was printed in the usual manner on the positive picture film and then a record was made from the phonographic record-
557 ing, which was then attached to the positive picture record.

Q196. Now, will you refer to the Rosenberg British patent, which is item No. 10 of our book? This is entitled, "Improved Means of Simultaneously Recording or Reproducing Sound and Visible Movements Accompanying such Sounds." Were those records of the sound and visible movement made on strip film? A. Yes, they were recorded on motion picture film in the usual manner.

Q197. The sounds and the pictures were re-
558 corded simultaneously, or otherwise? A. They were recorded simultaneously.

Q198. And in synchronism, I suppose, then? A. Naturally in synchronism.

Q199. And on the same film or on separate films or either? Does it provide for one or both? A. He provides for recording either on the same film or upon separate films.

Q200. Suppose they were recorded on separate films. What does he do with those two films after he has developed them? A. The patent provides for the printing of the records onto separate films.

Q201. That is, on the same positive film? A. On the same positive film.

Q202. If they were on the same positive film, what relation, as far as position is concerned, do the sound sequences have to the picture sequences? That is, they run parallel to the picture sequence or at right angles? A. They run parallel to the picture sequences, alongside the picture sequences.

Q203. Now, where Rosenberg discloses the recording of the sound and picture record on separate films, does it appear in this patent why he reproduced them on a separate film? A. He 560
wished to provide means whereby the sound record could run at a higher velocity through the reproducing mechanism than that in use in the case of the picture record.

Q204. Doesn't that get the two out of synchronism? A. No, because their relative velocities in projection are the same as those used in recording.

Q205. Is there any advantage to be gained by running that sound record at a little higher speed than the picture record? A. Yes, there are advantages, one of which is the ability by that 561
method to record and reproduce higher frequencies of sound than could be recorded and reproduced in operating the film at a lower velocity.

Q206. That is because you have more linear space to record those frequencies in, is that it? A. Yes, that is the case. The scanning line used in both recording and producing has a certain finite width, and when in the case of high frequencies of sound, that necessitates the use of very narrow lines, and in case the frequency increases sufficiently, the width of the scanning line may be sufficient to completely wipe out the modulation which is required to record the sound.

562 *Lloyd A. Jones—For Defendant—Direct.*

Now, by moving the film at a higher velocity, it is possible to spread these lines farther apart, and thus get satisfactory records of higher frequencies.

Q207. Now, will you refer to the MacCarty French patent, which is item No. 16 in our book? It is the last one in the book.

Mr. Ward: If it please the Court, I would like to say at this point that, of course, I have not had time to read these
563 new patents over, but if, after reading them over, I find they are anticipatory in character rather than illustrative of the art, I would like to object. I don't know what they contain.

The Court: My mind won't be confused. I won't consider them for anticipation, if they are not pleaded.

Q208. Now, Mr. Jones, does this patent disclose a simultaneous recording of sound and picture records on one or on more photographic
564 films? A. It discloses the simultaneous recording of sound and picture on the same sensitive photographic film.

Q209. And that is shown in Fig. 3, is it not; I mean the film resulting from that is shown in Fig. 3? A. Yes, that is the case. It is shown in Fig. 3, which carries both the sound and the picture record.

Q210. And that is a variable density sound record, not a variable area? A. Yes, that is variable density.

Mr. Neave: Your Honor, on page 2, the patent says that "Fig. 3 shows a part of the film. The alternating light and dark

565

bands 4 and 5, which seem to be extremely irregular are in reality extremely regular and harmonious, only their order changes with the corresponding changes of sound of the voice."

Q211. What would you say as to whether or not the record here disclosed shows that it is exposed variously in correspondence with vocal and other sounds, having slight differences of tone or intensity? A. I should say that it cer- 566
tainly means that it has been exposed to slight differences of tone and intensity, since that is a characteristic of sound in general.

Q211a. What does the record of the sound and pictures simultaneously on the same film have to do with the synchronism or lack of synchronism? Is it any better, is it any easier, or is it any more difficult to get synchronism when you photograph on the same film rather than on two? A. Well, of course, if it is recorded on the same film, synchronism is certain.

Q212. If it is recorded on separate films you 567
have to be careful, is that about it? A. Yes, that is the case. It is perfectly possible, of course, to obtain synchronism on two films, but it is perhaps somewhat more certain on one.

Mr. Neave: I offer in evidence a copy of the French patent, 532,750 to Vogt, Massolle and Engl, together with a translation.

(Marked Defendant's Exhibit H in evidence.)

Q213. Now, referring to this French patent, Mr. Jones, do you find in this patent or do you

568 *Lloyd A. Jones—For Defendant—Direct.*

not, disclosed the recording of sound and pictures simultaneously on separate negative films? A. Yes, that is disclosed.

Q214. Now, refer to the portions of the translation in which you find that. A. On page 2, last sentence, it says: "During the motion picture recording of the original plastic scene, one can couple in a positive manner to the motion picture film driving mechanism, the film winding drum of a separate and distinct acoustograph."

569 Q215. What is an acoustograph? A. Sound recording machine.

Q216. Then, what is done, according to this patent, with the two separate films after they have been recorded, after the sounds have been recorded on one and the picture has been recorded on the other? A. They are copied onto the same single positive film.

Q217. Of course, they have to be developed before that? A. Oh, yes, naturally.

Q218. Now, is this development, after the negatives have been exposed, referred to in the speci-

570 fication? That is in the second full paragraph on page 3, is it not? A. It is on page 3. The patent states: "The subsequent treatment of the picture films, after the exposure, is, in both cases, the same as far as the printing process, reproduction process, etc., are concerned."

Q219. Then, it goes on to say that they may be copied onto the same positive film? A. Yes.

Q220. Now, there are two methods of recording, are there not, disclosed in this patent? A. Yes.

Q221. Describe each of those methods. A. One method describes the recording of the sound and the film simultaneously, and in the other case,

the sound may be recorded subsequently—other sounds may be recorded subsequently.

Q222. Now, if that is done, what is the result as to whether or not the things have to be separately developed? A. Of course, they must be developed separately in both cases if they are recorded on separate films.

Q223. What is the other method of recording that is spoken of here? That is, one method, as I understood you to say, was to record the sound at one time, and the picture at another time, was that it? A. Yes, that is the case. 572

Q224. Well, is there any other method disclosed there? A. Yes, the simultaneous recording; I thought I mentioned that previously.

Q225. I beg pardon. I just wanted to bring that out definitely. A. Yes, sir.

> Mr. Neave: Your Honor, toward the end of this patent, as you will see, are the claims. It is on page 4, it is this French patent: "This invention refers to a photophonetic film." 573

Q226. That is a picture-sound film, isn't it? A. That is correct.

Q227. "To accompany images or pantomine, produced by tranverse light markings, and showing the following characteristic features", what does that mean? A. That means the sound.

Q228. "And showing the following characteristic features which can be taken advantage of either separately or in combination." Now, the second of these features that are enumerated here, marked 2, is: "Its impression, simultaneous with the original motion picture recording,

574 *Lloyd A. Jones—For Defendant—Direct.*

by sound sources which are not scenic (or, at least, are only partially scenic)", what does that mean? A. Well, it means that some of the sounds may be outside of the scene that is being photographed while others are inside and originate as a part of the action.

Mr. Neave: Then, the fifth feature which is mentioned in the introductory paragraph is:

575 "The copying of two series of photograms of the picture and accompaniment films"—

The Court: The translation is wrong on that number 2, they use the word "scenic" or "type"; it should be "which are not scenic", and then in parenthesis, "or at least are only partially", that should be the end of the parenthesis, and "scenic" should follow that.

Mr. Neave: Yes, I think that is correct.

576 The Court: That is so in the original.

Mr. Neave: Then, the fifth is, "The copying of two series of photograms of the picture and accompaniment films on the same film band."

Q229. Could you copy the two records from the negatives on a single film without first developing the negatives? A. No, that could not be done.

Mr. Neave: Your Honor, Mr. Ward put in evidence the DeForest patent which was in interference with the patent in suit, and he did not put in evidence the rest of the

577

history of that, and I want to put that in evidence and I offer the complete record in that interference proceeding.

(Marked Defendant's Exhibit I in evidence.)

Mr. Neave: This your Honor,—of course you understand I am offering this merely for the purpose of showing what happened there.

The Court: You are adding it to explain the decree.

578

Mr. Neave: Yes; that is, he offered the decree.

Mr. Ward: I offered the decision. I haven't any objection, I am just checking this over.

Mr. Neave: I am offering it to show what happened. I am not offering it in evidence, as to the proof of any of the statements therein made.

In order to complete this, I offer in evidence a copy of the File Wrapper and contents of this DeForest patent.

579

(Marked Defendant's Exhibit J in evidence.)

Mr. Neave: This is only a photostat I am offering here, Mr. Ward.

Mr. Ward: That is all right. Your Honor, I notice that this DeForest record so-called in Exhibit I contains the briefs of the two parties. I do not think they should constitute any part of the record.

Mr. Neave: The briefs are extremely interesting, because they show what position Mr. Ward was taking there as distinguished from the position he is taking here.

580 *Lloyd A. Jones—For Defendant—Cross.*

Mr. Ward: The briefs, I have no objection to the briefs, but they do not constitute any part of the record. If your Honor wants to read the briefs, all right.

Mr. Neave: It is agreed that the specification of the DeForest patent 1,489,314 as filed is the same as the specification as issued.

Mr. Ward: But not the claims.

Mr. Neave: That is right.

581 Q232. Mr. Jones, you saw here yesterday some of these charts Mr. Hoffmann put in evidence, being Exhibits 14 and 15. As I understand it, these charts or curves were made up by doing some work on the same photographic emulsions, same photographic material, and then using the developers according to the formulae that the defendant uses in its actual work for its picture and sound negatives. That being so, what is it that those curves mean? Do they mean that the developers have the same characteristics, the developments have the same characteristics or dif-
582 ferent characteristics? A. I should say they show they have developments of the same characteristics, character.

Cross Examination by Mr. Ward:

XQ233. Mr. Jones, attempting to cross-examine a man of your profound knowledge on this intricate subject, I feel almost as David must have felt in approaching Goliath, but I will try to see if we can straighten out a few things that I do not understand, but perhaps the Court does.

You testified in substance at page 255 of your testimony that you spent much time in the studios of the different producers. Will you state wheth-

er this experience has made you thoroughly familiar with what the Western Electric interests have been pleased to call their process for producing unitary sound and picture positives? A. Yes, I think it has.

XQ234. How familiar are you with the practices in the studios of their different large licensees such as the defendant here? A. Why, I think I understand the general principles of recording sound by the Western Electric system.

XQ235. Do you frequently go into the studios of their larger licensees? A. I should not say 584
frequently; naturally most of my work is in Rochester. Once in a while I find it possible to visit the studios.

XQ236. How often have you been in the defendant's studio or the place, the plant where they produce, where they record, recording pictures and sound and development, where this process is carried out? A. Within what period of time?

XQ237. Well, I am asking you, how often have you been there, in the last three years, let us say? A. Three years—

585

XQ238. A half dozen times? I do not care about exact dates, you know. A. Oh, probably in the last three years, probably four or five, perhaps a half dozen times. That is approximate, yes.

XQ239. How long were you there in 1931, how many times were you there in 1931? A. I frankly cannot tell you; I do not remember dates, whether I was in the studio during 1931 or not.

XQ240. Can you tell us the last time that you were in there? A. The last time I was there was about three of four months ago.

586 *Lloyd A. Jones—For Defendant—Cross.*

XQ241. Was that after you were engaged as an expert in this case? A. Yes.

XQ242. After that time when you were engaged as an expert in this case, you went there presumably for that purpose, when was the last time that you were there up to then? A. I cannot recall definitely just when I was there the last time prior to that.

XQ243. Well, you understand I am talking about the Long Island Studio, plant or studio?
587 A. Yes, yes.

XQ244. Can you tell us whether it was in the neighborhood of six months before that or two years? A. Well, as I recall approximately it was probably a year or so prior to that.

XQ245. That would take you to about a year and a half from the present time that you were there last up to the time that you went for the purpose of elucidating yourself to give this testimony? A. I have no record of when I was there on the last occasion, but I have been there frequently within the last ten years.

588 XQ246. They were not producing sound records ten years ago, were they? A. No.

XQ247. When did they start producing sound records, if you know, sound and picture records? A. In about, approximately 1926 or '27.

XQ248. You are sure it was that early? A. I have no record as to when they started to make sound pictures, but that is just approximate.

XQ249. Might it have been as late as 1928, as far as you know? A. Possibly.

XQ250. Did you find in your visits to the various studios of the Western Electric licensees, or their subsidiaries' licensees, licensees of their subsidiary company, "ERPI", as we call it, that

these various producer licensees used substantially the same process for sound and picture production and attaining of the unitary positive film making the sound and picture negative? A. The same as what—that the various ones—

XQ251. Use substantially the same process? A. Yes, as far as I know.

XQ253. As to the defendant in this suit, they use the process or the feature you say of varying the speed of their machine to take care of the different qualities in the film stock? A. They vary it; that is one of the purposes for which 590 they vary it.

XQ254. With all due respect, it becomes necessary to bring in other producers now, other licensees than this defendant. Can you state whether some of the other licensees of Western Electric also use this practice of varying the speed of the developer machine for that purpose? A. I can't state that positively.

XQ255. Do you know whether any of them do? A. No.

XQ256. Well then, will you tell me how they 591 take care of this difference which you say exists inherently in the manufacture of your company's film, that is to take care of the varying development of the film? A. It might be taken care of by varying the concentration of the developer or the temperature.

XQ257. Do you know that this is done? A. No.

XQ258. Then there are three ways that you have given of taking care of this difference in the susceptibility of your film stock to developer, namely, varying the speed of the machine, varying the concentration of the developer and vary-

592 *Lloyd A. Jones—For Defendant—Cross.*

ing, what else, temperature? A. Temperature. You might also vary the agitation of the developer.

XQ259. And all of those ways would give the same result? A. They would give results of the same character; whether or not they would give results of a sufficient magnitude to take care of the difference, I am not prepared to state.

XQ260. I thought you said that those different features would take care of it? A. I say they
593 all may be used.

XQ261. Which one could be effectively used to replace this idea of changing the speed of the machine? A. You could change the concentration of the developer, that would probably be the most obvious way, we will say.

XQ262. And how about the time of the development, could that be successfully used as another alternative? A. The time is included in the rate at which the film travels through the machine. When I said that the rate of travel of the film through the machine is varied, that is
594 specifically intended as a means of varying the time of development. There might be other ways of varying the time of development; you could change the length of film in the developing bath, the actual number of feet in the developing bath; that would change the time of development.

XQ263. With respect to the process of simultaneously taking sound and picture records on separate films separately developing them in a manner suitable or appropriate for each and then printing from the thus developed negatives onto the same face of a single positive film at different longitudinal extending portions of that film so that one of the records is at one side of

and along the other record, to what extent, if you know has that method gone into use in this country? A. Quite extensively.

XQ263. How familiar are you with defendant's process for producing a single sound and picture positive film? A. For producing what?

XQ264. A single sound and picture positive film. A. I am familiar with the general steps in the process.

XQ265. I couldn't hear your answer. A. I am familiar with the general steps in the process. 596

XQ266. Have you personally observed the speeds at which the two developer machines run? A. You mean have I actually measured them myself?

XQ267. Yes. A. No.

XQ268. Have you ever examined any of the picture negatives produced on those machines to be able to state what the gamma was? A. I could not state the gamma to which they are developed by looking at a picture.

XQ269. Have you ever tested them, examined them, I said examined them? Have you ever 597 tested them or examined them in any way to tell what the gamma is? A. It would be impossible to even, by measurement, to determine the gamma to which a picture is developed without knowing all about the object of which the picture was taken.

XQ270. I am assuming that, I have asked you the broad question. You know what gamma means, don't you? A. I think I do.

XQ271. Well, I have asked you if you have ever examined or tested, taken all the necessary steps, whatever they may be, to tell us what the gamma is of the defendant's pictures? By that,

598 *Lloyd A. Jones—For Defendant—Cross.*

I mean the overall gamma of the positive film? A. No, not directly.

XQ272. Well, indirectly, how about indirectly? A. Yes, I have indirectly.

XQ273. How many times? A. Only a few.

XQ274. How many? One or eight? A. Perhaps half a dozen.

XQ275. You have tested it about a half dozen times. Were those different picture scenes? A. No, I have—I think that I have answered the
599 question incorrectly, if you apply your question specifically to the examination of the picture records. I have not done that.

XQ276. Well, what records did you have in mind when you said that you had examined some? A. I have made sensitometric tests to show how the developing formulas behave on the kind of film they are using, and I know from those and from that practice what the contrast is to which any film of a similar nature is developed in that process.

XQ277. Then, as I understand your testimony,
600 you have never examined or investigated the question of gamma on defendant's sound-picture records? A. Not by examination of the pictures.

XQ278. The only thing you have done is to take these test strips and run those through a machine and figure out the gamma of those test strips? A. That is right.

XQ279. Now, were the conditions of those test strips the same as the conditions on the various picture records that they would run through the machines? A. Approximately the conditions are made as nearly duplicable as possible.

XQ280. Mr. Jones, what is the effect, if any, of this difference or variation in the develop-

ment of your emulsion stock, what effect, if any, does that have on the gamma of a picture made on such stock, with a given development treatment?

XQ281. You do not understand the question? A. No, I do not think I do.

XQ282. Perhaps I can split it up for you. You have testified that the film stock put out by your company which the defendant is using has an unavoidable variation in its susceptibility to developers, to the action of a developer; that is 602 right, isn't it? A. That is true.

XQ283. My question is, what, if any, effect has that got upon the question of gamma of a picture printed on that stock in a given and definite development treatment? A. Well, it will change or control the gamma to which the picture is developed to a certain extent, depending upon the magnitude of the difference.

XQ284. All right, what is the extent or magnitude of the difference? A. That is very difficult to say without some quantitative information.

XQ285. Haven't you got it? A. I haven't it 603 with me. I have a general idea of how much that might accomplish, but it would be only a very rough approximation.

XQ286. Well, you know what the variation is in your company's film stock, don't you, you know the limits of the variation with respect to its susceptibility to development? A. I know it in a general way, but I haven't any quantitative values which I can quote at this time.

XQ287. Can you give it in a general way? A. For a fixed treatment, that is, constant development in a developer of constant composition or

constitution—I do not think I can state quantitatively just what that could be.

XQ288. Well, would you undertake to approximate it, qualitatively? A. Well, approximately —no, I don't like to answer that question without the evidence before me and which I have not with me.

XQ289. Well, you stated, I believe, that the defendant's machine was speeded up, did you, varying from 9 to 12 minutes, that is, the speed
605 was increased or reduced in a variation between nine and twelve minutes, to take care of this factor, variable factor, in your company's film, did you not? A. No, I did not intend to make any such statement. I said one of the factors which makes it necessary to change the development time from time to time is this thing which you have been talking about, the possibility of the variation in the rate of development between one emulsion and another, and the variation which occurs as any photographic material is stored and gets older. Now, that is one of the
606 things which may make it necessary to change the time of development in order to get a fixed contrast.

XQ290. What are some of the other things that make it necessary to change the time? A. A small variation in temperature will change the rate at which development proceeds.

XQ291. With all of your research work and deep delving into these subjects that you gave in your qualifications, you have not any substantial idea as to what percentage of variation in your company's film would be— A. I have evidence on that. I have quantative evidence on this, but I don't care to make any statement without that evidence before me.

XQ292. You have no idea in your mind as to what it is? A. I have an idea, but I don't feel that I care to make any quantitative statement without definite evidence in front of me. I might make a mistake. My memory might be incorrect.

XQ293. I don't want you to make a quantitative statement. I want you to let me have your opinion or recollection, if you please, as to what it is. You can make it as general as you want to.

The Court: You may be getting only a guess, unless he says he has a positive 608
recollection.

XQ294. You have not any positive recollection? A. No.

XQ295. And you have no positive recollection or idea as to what effect that will have in varying the gamma of the picture on that stock with a given developer? A. Well, of course, the effect of that factor will be directly in proportion to the variation, but I have no positive recollection of the magnitude of that over a period.

XQ296. You cannot say whether it would be a 609
variation of from, say, .9 to 1 or 1 to 1.1 in the gamma? A. No, I have told you that I have not a sufficient positive recollection of that to make a statement.

XQ297. Would you be able to get that information by tomorrow morning?

By Mr. Neave:

Q298. Does this disclose any confidential information of the Eastman Company? A. Yes, it does, to a certain extent. I cannot commit myself to get that information.

Mr. Neave: I do not think it should be done unless it can be shown that it is really essential to this case.

Mr. Ward: I consider it essential. Here is a witness who has undertaken to hire himself out as an expert in a patent case, and he makes certain statements about the result or effect of a variation in film, and I think it is important, from my standpoint, to couple that up with some other
611 variations.

Mr. Neave: May I ask this witness whether he has hired himself out for the purposes of this case?

A. I have not.

Mr. Ward: He has undertaken to testify and has testified about this variation.

The Court: He did not testify in degree. He testified generally that it was one of the things.

Mr. Ward: I think the degree to which
612 it is one of the things is important.

The Court: I do not see why he should have to tell what the Eastman Company does, if they claim it is secret to their business.

Mr. Ward: I really cannot see where the secret comes in.

The Court: I don't know. They may not want to advertise a variation of their product.

Mr. Neave: Can you not get from him whether it is important or not, without getting the exact degree?

Mr. Ward: He says he does not know anything about it. That is the trouble.

The Court: Well, the other side suffers from that, if it is of importance, if you show it is important.

Mr. Ward: It is important to me to support my contentions in rebutting some of the things which the witness has testified to.

The Court: I do not think his guess is of any importance. 614

Mr. Ward: I will drop it and take it up again probably tomorrow morning.

By Mr. Ward:

XQ300. You decline to get that information? A. I am not in a position to promise to get such information. I am not the management of the Eastman Kodak Company.

XQ301. In the testing of these sensitometer strips or whatever you call them, you get a certain gamma reading, do you? I am now talking about your test which you say you conducted of defendant's development process. A. That is correct. 615

XQ302. Going back to those tests that you referred to, you said you made about a half dozen of them? A. The tests I referred to were made in my own laboratory, tests on sensitometer strips, exposed in our standard sensitometer, and developed in the developers made up according to the defendant's formulas. They were developed according to the technique which we use in testing photographic materials—

XQ303. Now, wait a minute, the sensitometer

strips, as you testified, as I understand it, were not run through the defendant's machines? A. That is perfectly true.

XQ304. Well, now, will you tell us just exactly how you tested those? A. The sensitometer strips which I used to determine the action of the two formulas used by the defendant.

XQ305. Yes. A. The sensitometer strips were exposed in the usual manner on a standard Eastman type 2B sensitometer, using—

617 XQ306. Wait a minute. You are starting too far up. How did you develop them? A. The strips were developed in a tray, according to the standard technique which we use in testing all of our materials. The tray is filled with developer and is then rocked by hand by the operator. The man who makes these tests is one who does nothing but make sensitometer tests all the time, and he does hundreds of tests every day, and he has by long practice and skill become able to duplicate his results from time to time. It is the test on which we control our

618 product.

After developing those materials, those strips, for the fixed length of time, for a series of lengths of time, they were taken out, fixed, washed, dried and read in the usual manner.

XQ307. Now, did you do that work yourself? A. No, I did not.

XQ308. Did you see it done? A. No, I did not.

XQ309. You just turned it over to somebody else and told him to do it? A. I turned it over to the man who is in charge of the sensitometric section of my laboratory, who does all of that

work of testing our products all the time from day to day.

XQ310. And whatever results he gave you, you just accepted those as being correct? A. Yes, I know they are correct because—

XQ311. Because you believe in him? A. He is probably more skillful and more adept in doing that work than I am.

XQ312. How do you know that he had the developer, the two developers of the defendant? A. I don't know that—

620

XQ313. You took his word for it? A. I gave him the formulas. They were sent to our mixing room, and they were compounded with the greatest of care—

XQ314. One minute. You say they were compounded. You assume they were compounded with the greatest of care? A. That is right.

XQ315. You don't know that they were compounded with any particular care, do you? A. No.

XQ316. And you don't know that they were the formulas the defendant uses, do you? You don't know it yourself? A. No, if you put it that way.

621

XQ317. For all you know about these tests, they may have taken the standard formula of the Eastman Company? A. That is right.

XQ318. And that proceeding applies to the half dozen strip tests that you said you made, and does it also apply to these exhibits that you introduced here of microphotographs, Defendant's Exhibits D and E? A. Yes; I did not make those personally. They were done in the proper department of the laboratory where the men are specialized in doing that kind of work.

622 *Lloyd A. Jones—For Defendant—Cross.*

Mr. Ward: Your Honor, I object to all these exhibits and these tests on the ground that the whole thing is hearsay testimony of the witness.

The Court: You have them in evidence. The value of them may be greatly weakened.

Mr. Neave: It is a matter of weight.

The Court: I don't know. He says he did not make them. He does not know.

623 Mr. Neave: He does not know in the technical sense.

XQ319. Mr. Jones, at page 253 of the record, Q10, you mentioned the first years of your work with the Eastman Company, that you were working on the theory of tone reproduction or visual sensitometry. That reproduction had to do with color tone of pictures, did it not, rather than sound tone? A. It had reference to the tone reproduction in the optical sense, the reproduction of brightness.

624 XQ320. That is color? A. Not color, no; tone brightness.

XQ321. I guess I am over my depth now. A. We use the word "tone" in referring to the relative brightness of objects as distinguished from color.

XQ322. Let us get it to a lower basis: It relates to pictures, then? A. That is right.

XQ323. And in Q12 of your testimony, where you refer to your scientific contributions on the subjects of tone reproduction, to which you gave a great deal of attention, you were there again referring to the matter of picture tone? A. That is correct.

XQ324. You stated, I believe, at page 258, that George Eastman or the Eastman Company succeeded in making a flexible transparent support of cellulose nitrate. You know, do you not, the fact is that one Hannibal Goodman originated that? A. I believe there has been some discussion on the point.

XQ325. It cost Eastman several million dollars for appropriating that, did it not? A. I don't know how much it cost.

XQ326. You testified at page 260, Q25, that 626
as you understood the patent in suit, "The object of the invention was to provide different development treatments for the different picture scenes." As a matter of fact, Mr. Jones, what the patent mentions as a difficulty with the old process is that the picture sequence may be under-or over-exposed with respect to the sound sequence, does it not, rather than one sequence of pictures being over-exposed or under-exposed with respect to another sequence of pictures? A. No, I do not understand it that way.

XQ327. Well, suppose you take a look at the 627
specification, page 1, starting in at line 9:

> "In this procedure, however, there frequently occur in consequence of the changing lighting conditions in the cinematographing process, changes in the degree of exposure of the silver bromide coating, and this causes the picture sequence to be either over-exposed or under-exposed.
>
> "As the same film, however, carries close to the picture sequence the normally exposed sound sequence, these difficulties

628 *Lloyd A. Jones—For Defendant—Cross.*

> resulting from differences in exposures cannot be remedied in the case of combined negatives, by developing practices such as by weakening, strengthening, and so forth. They can only be remedied by subjecting the under-exposed or the over-exposed portions of the negative to separate appropriate treatments."

Don't you find a clear statement there that
629 the difficulty is the contrast or relation between the under-or over-exposed picture sequence with respect to the normal exposed sound sequence? A. No, I do not so interpret the language.

XQ328. What does the patentee mean by the statement, "As the same film, however, carries close to the picture sequence the normally exposed sound sequence"? You think he is not drawing a comparison there between a normal lighting of the sound and a lighting of the picture sequence which may be different? A. No, I do not interpret the patent in that manner.

630 XQ329. You do not find here any statement, do you, in this patent that one part of the picture sequence is to be developed and treated differently from another part of the picture sequence? A. Well, he specifically mention the difficulties of over—and under-exposure of different scenes, and then he speaks of methods of remedying the difficulties.

XQ330. And he expressly mentions the normal exposure of the sounds, does he not, and contrasts that with the over-or under development of the picture sequence, does he not? A. No, I don't think it is contrasted with the over-and under-development.

XQ331. I am willing to leave it there. Are you familiar with patents and patent drawings? A. To some extent, yes.

XQ332. What did you say? A. Yes.

XQ333. Is it your contention or understanding that patent drawings are made to scale or merely illustrative drawings? A. I think they are usually merely illustrative and not made to scale.

XQ334. You testified at page 261, Q30, that there was no disclosure in the patent of a standard width film, and at Q31, that Fig. 2 of the 632
patent is wider than the standard film and would not go through a standard gate. Where do you get the basis for those statements? A. The film in Fig. 2?

XQ335. Yes. A. Well, naturally, if it would go through a standard gate, it would then not run over the standard sprockets with which that standard machine is equipped.

XQ336. That is not what you said, Mr. Jones. You said specifically that the film in Fig. 2 is wider than the standard film and would not go through a standard gate. I ask you as a matter 633
of fact whether the film shown in Fig. 2 is narrower than the standard film? A. Of course, that statement was based on the assumptions that the perforations shown were separated by the standard width.

XQ337. What you meant was that assuming that Fig. 2 showed sprocket holes equipped for what is today a standard sound picture, that the over-all of the film would be wider than the standard? A. No, machines have been made for the last forty years with sprockets having a certain separation between them—

XQ338. Picture machines, not sound picture

634 *Lloyd A. Jones—For Defendant—Cross.*

machines for forty years; right? A. That is right.

XQ339. The picture machines? A. Yes.

XQ340. Go ahead. A. Assuming that the sprocket holes as shown in Fig. 2 are of proper separation to run through the standard machines, the standard picture machines, of the date of 1920, or something like that, this film would necessarily be wider than standard.

XQ341. And was there any such thing at the
635 effective date of this patent, 1921, as any standard practice with regard to sound picture projection? A. No, I don't think there was anything that could be considered standard practice.

XQ342. As a matter of fact, you know that there was no commercial use of sound machines at that date, do you not? A. That is right.

XQ343. So that at the time of this invention, there was nothing to standardize, to measure up any standard, was there? A. There was a perfectly definite standard mechanism for project-
636 ing silent pictures.

XQ344. Exactly, silent pictures. And at that time it had not been determined, had it, even whether the sound picture, the sound record, should or would go onto the picture record? A. No.

XQ345. Is it your contention that this process set forth in this patent is in any way prejudiced by the fact that the sound record is outside of the sprocket holes rather than inside? A. It is only prejudiced to this extent: That certainly when sound technique was being developed, there was a very large mass of equipment in use all over the world in thousands of

theatres in which a film of certain standard width, standard perforations, could be run. It seems obvious that commercially it would be desirable to make a sound film that would run through that machinery without serious modification.

Q346. Now, Mr. Jones, I take it you don't want to be put in the position of blowing hot and cold within a half hour. Didn't you intend to give the impression in experting such patents here as Bullis and one of those others which had a wide sound track, that there were advantages 638
in that track, that it was a good thing, didn't you do that? A. From certain points of view.

XQ347. And by putting this sound track of the patentees on the outside of the sprocket, as they show it, they also maintained that advantage that you allege for some of these other prior art patents, did they not? A. Yes, that is possible.

XQ348. And by doing so they also permitted the total field between the sprockets to be given up or retained by the pictures, did they not? A. That is true. 639

XQ349. And I think a few minutes ago or so, when Mr. Neave had you, you announced that that was a desirable thing, did you, and it is, is it not? A. It is desirable from certain points of view, yes.

XQ350. So that from a technical standpoint, the standpoint of desirable results short of commercial economy on account of cost of mechanism, it is desirable to have the type of film shown in Fig. 2, as shown in this patent? A. There are certain arguments for such a type.

XQ351. Well, now, let us get down a little

closer together, if we can: It is desirable from a technical standpoint or results to have the biggest field for your picture possible? A. You mean the biggest we can put on standard film?

XQ352. Yes. And it is desirable to have the sound track, sound marks, as wide as you can have them and get them on a film which can be economically handled? You said so, didn't you, in regard to some of these patents a while ago? A. Yes, I think it is desirable to have a sound
641 track of certain optium width,—probably I should not say as wide as possible.

XQ353. You know what I meant. I meant what you meant. Then the fact is that the only criticism you really have of this patent is that instead of, German-like, showing the best type from a technical standpoint, you criticize it because it has not got the American style of quantity production at a cheap rate, so to speak, using the standard machines rather than to have to change them and giving up some of the picture space for the sound picture in order to use
642 the same machines that we have been using? That is about what your criticism comes down to, is it not? A. Well, it is not the only criticism.

XQ354. At page 261 of your testimony, Q33, when asked what were the steps of the process of the patent where two separate films were used, you testified that the process involves the simultaneous exposure of the sound and picture records and the separate development of those, and then the printing of those two onto a single positive film. And then you started to say something else but stopped. I will ask you if the process as described in the patent does not also

involve the printing of the sound and picture records side by side on different longitudinally extending portions of a single film? A. That is the printing step which I believe I mentioned.

XQ355. I don't think you mentioned it. You were cut off in your answer. I just want to see if you complete your answer in that way. A. The answer, as I recall it, was intended to include three steps: The simultaneous recording, the separate development, and the printing of the two records onto a single positive film. Is 644 that correct?

XQ356. Different longitudinally extending portions side by side? A. I did not read the entire claim. I would say essentially it is a printing step.

XQ357. I did not know whether you left that that way purposely or not. And you say that that is a four-step process? That is what you testify to, that that was a four-step process. A. It is a three-step process, or in case we read it in the light of other disclosures and include the re-uniting of the negatives before printing 645 them, you have the possibility of a four-step process; either three or four.

XQ358. You have a simultaneous taking, separate developing, then the printing— A. The possibility of re-uniting—

XQ359. No, I believe that is the alternative process now that you discussed elsewhere. And then the printing of those two negatives onto a common positive? A. It is also possible in the light of the disclosures to consider re-uniting in this case.

XQ360. I am asking you about the one you

646 *Lloyd A. Jones—For Defendant—Cross.*

testified, at page 261, where you start off with two separate films. Will you look at your testimony there? A. I have not got the testimony.

(Testimony handed to witness.)

XQ361. You were testifying there simply to the process of the patent, where two separate films were used at the beginning? A. Is that Q32?

XQ362. 33, at the bottom of page 261.

647 The Court: Which patent is that, the patent in suit?

Mr. Ward: Yes, it is the patent in suit we are talking about. I am referring to his testimony.

XQ363. I don't want to hurry you, Mr. Jones, but I think the question is a simple one. I just asked whether the process that you testified about at Q33 was not the process of the patent where two separate films were used?

Mr. Ward: I will strike out the ques-
648 tion to save time, if the witness cannot answer it, and go on.

A. Yes, that seems to be correct.

XQ364. Mr. Jones, is it true that extending the time of the development of negative film increases the density difference of the negative? A. Increasing the time of development?

Mr. Ward: Read the question.

A. (Continued.) Yes, that is true under certain limitations.

XQ365. Let us have briefly the limitations. A. If development is carried to an extreme, a point

is reached beyond which you cannot raise the contrast.

XQ366. Now, do you know that of your own knowledge or is that also hearsay? A. I know that of my own knowledge.

XQ367. All right. Go ahead. I did not mean to interrupt you in your answer. A. I think the answer is complete.

XQ368. Is it also true that the extent of development of the film depends largely upon the time of development? A. Yes. 650

XQ369. Then a given exposed negative of a given photo will have a greater density difference if the time of development is increased, that is greater gamma, is that right? A. Up to a certain point where the gamma becomes constant.

XQ370. Well, in practice you do not work up on that point of the curve you are referring to, where the gamma becomes constant, do you? A. It depends upon the practice.

XQ371. Well, in general practice. A. I do not know what you mean by general practice. There are very many occasions where we have to develop the film up to the limit and get all the contrast that is possible. 651

XQ372. Why, you certainly do not do that with these machine developers that you let go and take care of themselves, where the light conditions are perfect? A. No, not in that practice.

XQ373. Now, in this practice, is it true that a given exposed negative of a negative stock will have a greater density difference if the time of the development is increased, that is, greater gamma? A. Yes.

652 *Lloyd A. Jones—For Defendant—Cross.*

XQ374. In the development of the film, does the time, assuming all other factors being the same, a certain variation in the time of development will vary the extent or degree of development of the film? A. It will vary the extent of development.

XQ375. That is, it will vary the gamma of the resulting film? A. Yes, that is true.

XQ376. Referring to your testimony at page 273, as I understand the testimony you state in
653 substance that the negative developer, that is the developer for the defendant's picture film, is one of relatively low concentration, and is intentionally made so in order that it may act on the picture negative for a relatively long time, and that this may be done because the negative film inherently is a relatively slow developing material, and uses a fairly long time in order that the sulphite may exert its solvent action and produce an image of relatively fine grain structure; and in the next paragraph of your answer, you state, on the other hand, that the
654 positive film used by defendant is inherently one which develops very rapidly and for practical convenience and expediency it is desirable to run it as fast as compatible with good results. It is a fair synopsis of this testimony that I have referred you to to say that the picture stock of defendant requires a developer of lower concentration acting for a relatively long time, to get the desired result, and on the other hand, that the sound stock of defendant is one that develops very rapidly and is run at a relatively rapid rate through the developer? A. In order to get the desired contrast in the two cases.

XQ376. Exactly. Will you please tell us, if you can what would happen if you took defendant's undeveloped picture negative and attached it to the corresponding or accompanying sound negative of defendant, which is on positive stock and ran the two through defendant's sound negative developing machine containing the defendant's sound developer? A. I can't tell you offhand just what contract would be obtained in that case, because we are putting a slow developing material through a more concentrated 656
developer. Now, just how it would balance up, I would have to refer to data in order to find out.

XQ377. Now, Mr. Jones, with all of your profound knowledge and experience, practical and theoretical, you have a pretty good idea, haven't you, of what would happen if this positive stock went through that same developer with the negative stock asserted in my question?

Mr. Neave: What developer are you using?

Mr. Ward: Defendant's sound developer. 657

A. Yes. You would get a somewhat higher contrast than if you developed in the negative developer.

XQ378. Now, what do you mean by that, you would get a somewhat higher contrast on what, on the sound record film or the picture record film? A. No, as I understood your question, you said, you asked what would happen if the negative stock were run through the picture formula—

XQ379. No, you have got it wrong. A. The negative stock through the sound formula.

XQ380. With the sound stock? A. Well, it would develop to a higher contrast—

XQ381. Just one moment, the proposition I have put to you in as simple language as possible is that you take the picture negative exposed but not developed, and the sound negative exposed but not developed, take two of them, and then you put those together through defendant's developer machine for sound, using defendant's sound developer machine. What would be the
659 result as to picture and sound, the records that would come out? You can first give me the sound, that is, if you want to, and then the picture, but I really want the contrast between the two. A. I still do not see—

XQ382. Answer it in your own way. A. You must assume that the sound film is going through the sound formula for the usual time?

XQ383. Correct. A. Of, say, four and a half minutes?

XQ384. Correct. A. The negative would have a lower contrast than the sound.

660 XQ385. That is, the picture negative? A. The picture negative would have a lower contrast than the sound.

XQ386. That is, the picture negative would have a lower gamma than the sound? A. That is right.

XQ387. Can you tell us approximately how much lower? A. Yes, I can tell you approximately.

XQ388. Give it as nearly as you can from the data that you have. A. It would be about .18 lower in gamma approximately.

XQ389. That is, the picture record would be

.18 lower in gamma than the sound record? A. The picture, yes, the picture record.

XQ390. There would be a difference— A. The record on the negative film, in other words.

XQ391. Yes. A. On negative stock.

XQ392. There would be a difference of 1.8? A. No, .18.

XQ393. A difference of .18? A. Yes.

XQ394. Now, did you ever try that? A. Yes, I have tried that, running the test sensitometrically in the usual laboratory manner; I have not 662 tried it in those actual machines.

XQ395. Now, what would happen if you took defendant's sound record on its positive stock and attached it to the corresponding or accompanying picture record, as taken by defendant, on its negative stock, and ran both pieces together through defendant's picture developing machine, containing the picture developer? A. You would get a higher contrast on the sound negative.

XQ396. That is in this case, it is the reverse of the former case. In this case, you get a higher 663 contrast on the sound negative? A. On the sound negative.

XQ397. Will you please tell us what the difference in contrast is between picture and sound in this instance? A. Well, there will be approximately .3 in gamma. Of course, again, my values are based on laboratory sensitometric tests run in these two developers, not on the developing machines.

XQ398. And with reference to this last test that you have talked about, you actually tried that out, you have curves there for the trials of it? A. That is correct.

XQ399. Will you please then give us the actual gamma rather than just the contrast? Give us the actual gamma of the picture negative and the actual gamma of the sound negative? A. The actual gamma of the picture negative is .60 and for the sound negative, that is, on positive stock, is about .9 or just a little less than .9.

XQ400. Now, will you revert back and give us the actual values of gamma for the picture and sound in the previous instance where you
665 ran them both through the sound developer? A. On the sound negative recorded on positive film, a gamma of .5 and for the picture negative, recorded on negative film a gamma of about .32 or .35, as near as I can place it.

XQ401. In Q74 at page 277, Mr. Jones, you testified that there would be no advantage in giving defendant's positive emulsion sound record a different character of development from that used for the negative emulsion of the picture record. You did not mean by that, did you, that there was no advantage in giving them separate
666 or different development treatments, did you? A. I meant just what I stated in the answer, that there would be no advantage in giving them different characters of treatments.

XQ402. And in giving that answer you used—

A. What is the page, may I ask?

XQ403. Page 277. I think it starts there. In giving this answer and using that expression, "character of development", you used it as you have defined that term in your testimony, namely as applying to the use of developers having in general the same active ingredients even if in different proportions? A. Yes, I mean developers having the same active ingredients.

XQ404. Regardless of differences in the proportions of the active ingredients? A. Any development of the same character.

XQ405. That is, so long as they give the same granular structure? A. Same granular structure, same color of image, same sort of division of silver deposit and same shape of characteristic curve apart from those differences, which are a function merely of the time the material is left in the developer.

XQ406. Your answer that I referred to, really 668
wasn't intended then to convey any idea that there was no advantage in giving the defendant's positive and negative stock different development treatments? A. Yes, I think there was a real meaning. I meant there is no advantage in giving the defendant's positive and negative stock different characters of treatment.

XQ407. I didn't say character. Read him my question.

(XQ406 repeated by the Reporter.)

A. No, not different development treatments. 669

XQ408. And you did not mean that there was no advantage in using with defendant's sound and picture negatives respectively the respective developers and times of development that defendant uses? A. No, I meant to convey the idea that the only thing that it is necessary to do in developing the defendant's picture and sound negatives is to give them the same character of development, by adjusting the extent of the development to obtain the necessary contrast in the case of the two materials.

XQ409. And they do that in defendant's case

by using a different developer, even if of the same character, and a different time of development, don't they? A. That is true.

XQ410. Where you testified that the sound negative and picture negative obtained by defendant as a result of those two separate development treatments, one for each, resulting in "negatives of the same character", here again you use the term "same character", in the sense that you defined it in your testimony, did you
671 not, that is negatives having been developed from the same type or character of development? A. I mean negatives having been subjected to the same character of development, and in this particular case, the defendants, having been adjusted to give approximately the same contrast in addition to that.

XQ411. And developers also having been shown to assist in giving that— A. Naturally the time of development has to be determined as a result of the concentration of the developer, the activity of the developer.

672 XQ412. So the defendant selects developers of different intensities and uses them for different times to get what it is after here in the way of contrast: is that correct? A. Developers of different concentrations.

XQ413. You prefer the word "concentrations", to "intensity", or activities would be another word? A. Quite right.

XQ414. At Q72, you testify that each of the two developers of defendant produced a deposit on the film of practically identically the same granular character. What do you mean "by practically identically the same", in that case? A.

I mean that they are inappreciably different for all practical purposes.

XQ415. You do not mean that if defendant's positive stock and negative stock for the sound and picture are developed together in the same developer and for the same length of time, in other words, with all factors the same except the stock, that the granular characteristics of the two films would be practically identical, do you? A. No.

XQ416. You do not mean by your answer to 674
Q72 to say that defendant does not have to use different development treatments with the picture and sound stocks in use in order to get the results it is after? A. No, it is necessary to use different times of development in order to obtain the desired contrast in the two cases.

XQ417. And it does use the different developers of different intensities, as you call them? A. Yes, it uses developers of different concentrations.

XQ418. In Q73, in your answer, you state as to the shape of the characteristic curve of de- 675
fendant's sound stock and picture stock, "they are identically the equal contrasts". I think that is wrong. What should it be? A. They are identical at equal contrasts.

The Court: Do you want to make that correction on the record now?

Mr. Ward: Yes.

XQ409. But you cannot get that condition with defendant's sound and picture stock without developing them for different lengths of time and/or in different developers, is that right? A. You might get that condition quite easily by de-

676 *Lloyd A. Jones—For Defendant—Cross.*

veloping for the same time in developers of different concentration. The and/or bothers me.

XQ410. At page 276, Q69, in giving the reason for the different proportions of the ingredients in defendant's respective developers, you state, "It is merely a question of practice". What do you mean by "It is merely a question of practice"? Do you mean to say it is merely an arbitrary matter? A. No, I mean to say that it is a question of expediency, practical expedi-
677 ency from the standpoint of adjusting the concentration so that the desired contrast will be obtained in a convenient time.

XQ411. Well, then, it is a question of doing it to get what they are after, isn't it? It is done to get that picture record negative developed the way they want it developed in a proper way? A. It is done in order to get the desired contrast in the picture negative.

XQ412. And defendant selects its sound negative developer and time of development because this development treatment acts on the sound
678 negative in a manner appropriate to the sound negative; isn't that true? A. It does not act in any different manner or in any appropriate manner. It acts at a proper rate, it gives the desired extent of development.

It seems to me that we are confusing to a certain extent the use of the two words, "extent of development" and "character of development". Character applies to different kinds of development, it connotes a difference in kind, while the extent refers merely to differences in degree.

XQ413. Now, one moment; do you find anything in my question about character of develop-

ment or the other kind of thing you were taking issue with? A. If you mean by that that the appropriate manner is one which will give the desired contrast or extent of development, that is the case.

XQ414. "Suitable manner" would suit you better? A. Suitable extent.

XQ415. You have testified at Q64 that there are certain unavoidable variations in film stock, one of which is "the rate at which it develops". Is it not also true that another unavoidable vari- 680
ation in film stock is its sensitivity or rate at which it will be exposed by a given light source? A. Yes, that is true; it is impossible to make it all precisely the same speed or sensitivity.

XQ416. Can you state which variation the film stock is more subject to, the variation in rate at which it develops, or the rate at which it will be exposed by a given light source? A. I cannot make any quantitative comparison there, and it depends a great deal on how we express these differences, as to which is the greater.

XQ417. Before you go any further, this in- 681
formation would not hurt your concern any, to tell us the relative differences. A. I do not think I know how to answer your question in quantitative terms.

XQ418. I did not want to go any further on that if your answer was yes. What I mean is, from your knowledge of the situation, which of these difficulties is the film stock in general more susceptible to? A. That would be very difficult to say.

XQ419. That would be difficult to say? A. Very difficult, as to which is the more susceptible.

682 *Lloyd A. Jones—For Defendant—Cross.*

XQ420. Haven't you often had to investigate a matter of this kind? A. Yes, but I haven't a sufficient mass of data before me to make a quantitative comparison.

XQ421. They both have given trouble in a practical sense, haven't they? A. They both certainly have to be encountered in practice.

XQ422. And they both have been subject to investigation and consideration by your concern, haven't they? A. Yes, that is true.

683 XQ423. And aren't you the head of the department, the fountain-head of knowledge that they would come to on that matter, so to speak? A. I should say there are other fountain-heads.

XQ424. I mean you are *the* one, are you not? A. No, I do not think that is necessarily true. My activities are of a research nature. Now, I do not see tests from every emulsion that is made. It is not a part of my duty to collect and tabulate quantitative data on the variations of product from day to day. I therefore do not feel qualified to speak quantitatively on that sub-

684 ject.

XQ425. I do not think I have ever asked you for any quantitative information, Mr. Jones. You are at the head of the whole outfit there in this line, as I understand you, and it does seem to me that there is a situation of practical difficulty in these two respects, and you ought to know, I should think, if you will permit me to say so, which of these is the most aggravated condition. A. You are asking me, however, to state which is the greater. Now, I cannot state which is the greater variation without quantitative data before me.

XQ426. I see. You have no definite knowledge on that subject now as to which is the greater? A. No, I haven't.

XQ427. Have you any idea as to which of the two would affect this question of gamma the most? A. Well, I think, assuming a correct exposure of material, the rate of development will affect the gamma more than the sensitivity difference.

XQ428. And you have testified that the speed of defendant's machine is varied to take care 686
of the difference in the rate in which the film will develop, is that right, or didn't you so testify? A. I say that is one of the factors which makes it necessary to change the rate of development.

XQ429. Would another factor be this last definition that I have spoken to you about, the varying sensitivity or rate of exposure of your film stock? A. No, I think not.

XQ430. Will you give me the other reasons for changing the speed of the machine that you had in mind? A. I have mentioned before slight 687
variations in the temperature at which the bath was held.

XQ431. I understand they hold that constant. A. Of course, nothing is held absolutely constant; there is always a certain tolerance in any physical measurement.

XQ432. And there are no other reasons than the ones you already testified to? A. There may be; there may be other contributing causes. The concentration of the developer is also held constant, but there again there is no possibility of obtaining an absolute constancy. There is always a certain small variation.

688 *Lloyd A. Jones—For Defendant—Cross.*

XQ433. Is it an easy matter to change the speed of defendant's developing machine from one length of film to the other? A. You mean while film is traveling through the machine so that two consecutive scenes would receive different times of development?

XQ434. Yes. A. No, I should say not.

XQ435. It is not an easy matter? A. No.

XQ436. You don't know the practice of putting lengths of unexposed film between consecu-
689 tive shots, so to speak? A. No, I am not familiar with that.

XQ437. You never heard of that? A. I am not familiar with that practice.

XQ438. As far as your knowledge of the operation of these machines goes, do they take, say, a shot out on a snow scene and connect it right up with a shot of a fog, if they want to, together, and put nothing in between at all? A. That is the practice, as I understand.

XQ439. Now, you said something in regard to the cameramen being able to keep their cameras,
690 their openings so adjusted as to always be able to get the necessary illumination, so that they are not troubled with over- or under-exposure of film anywhere. With regard to recording pictures, take the case where there was a brilliantly lighted scene outdoors, such as a snow scene on a bright sunny day, and another scene in proximity, with the light quite dull, such as a fog scene, or take the case of a scene where a man is walking from a brilliant sunshine on the street into a dark hall, or the case of a studio scene where one goes from a brilliant light into a dark closet or hall. In those cases is the cameraman

able, following that party, to instantaneously adjust his lens opening— A. Not instantaneously, no.

XQ440. Would he have any time to do it at all in cases like that? A. Yes, as I have usually observed the practice, you have plenty of time to adjust—

XQ441. Following a man from a brightly lighted street into a dark hall, he would have time to adjust his shutter as he followed along? A. I think I misunderstood your question en- 692
tirely. I am sorry. Your question refers to a continuously photographing a scene which is changing?

XQ442. Yes. That is very frequently done, is it not? A. Yes.

XQ443. Now, in cases of that kind, Mr. Jones, don't you think you are able to get under- and over-exposure? A. It is probable that you will get variations in exposure. Whether those are sufficient to cause over- and under-exposure in the sense that we use the term is quite question-
able. Of course, the photographic film has a con- 693
siderable latitude, and even though a film may have, one exposure may be less than another, the two negatives produced therefrom may be negatives of perfectly satisfactory quality and produce perfectly satisfactory prints.

XQ444. Yes. You say that you have considerable latitude in the films. How long have you had that latitude? A. Always had latitude.

XQ445. Had it in 1921? A. Yes.

XQ446. Having the same latitude in 1921, and I assume that the actinic rays of the sun have not changed any since 1921, won't there be just

694 *Lloyd A. Jones—For Defendant—Cross.*

as much trouble from under- or over-exposure in these cases today as there were in 1921? A. Not necessarily at all. It does not follow.

XQ447. Why not? A. I have not made any statement to the effect that the latitude of the film is so great that you cannot make under- and over-exposures. It is quite possible that you can make under- and over-exposures. I have merely stated that there is a certain latitude over which you can have a changing lighting
695 condition without running into serious over- or under-exposure.

XQ448. I understood you to state on your direct that in view of the experience that these cameramen have had in the last five or ten years, that there was no danger from under-or over-exposure any more, so you could just put these thousands of feet, costing hundreds of thousands of dollars, right through a machine and turn a crank, and depend on their coming out O. K. at the other end. If they did not come out O. K., there would be a great monetary loss.
696 You practically testified to that, did you not? A. That is the present practice in machine development.

XQ449. Now, I ask you what is the change in conditions, what are the changes in conditions in the film or in the actinic rays of sunlight or lamp-light from 1921, when this patent application was filed, and today, which makes the danger of over- or under-exposure less today than it was then? A. There has been no change in the sun or the lights and perhaps not a great deal of change in the film, but then there has been a great deal of change in what the camera-

men know, and the knowledge that they have of being able to give correct exposures. There have been improvements in the technique of studio lighting so that it can be controlled within smaller limits.

XQ450. That is, for a given set of lighting? A. It applies to studio lighting in general.

XQ451. Take these changes I have been talking about— A. One thing that has happened, they have adopted quite largely the use of incandescent lighting which gives light of some- 698
what appreciably less variation than was formerly used when arcs were more commonly used, were more extensively used.

XQ452. I will read you your answer or the question and answer, Q52, page 269:

> "As a matter of fact, does the disclosure of the patent in suit contemplate or does the object of the alleged invention as there stated relate to or having anything to do with sound and picture records in which the picture record, as well as the sound record, has been continuously 699
> normally exposed? A. No, it does not."

Will you please tell me what you meant by that testimony? A. As I stated previously, I considered the object of this alleged invention to be a method whereby the differences in exposure of the various picture scenes may be developed separately and therefore suitable corrections be made as per the usual practice at that time, without having to give different development treatments to the corresponding portions of the sound record, which, according to the specification, are normally exposed.

XQ453. Mr. Jones, you gave us yesterday some gamma data with regard to those sensitometer strips which you said you had some one test. Will you please give us the data, the gamma data, as to the positive prints with respect to the strips tested in the defendant's positive developer and that tested with the negative developer? A. You want the gamma value on positive film—

XQ454. Yes. A. —obtained by developing that
701 in the positive developer?

XQ455. That is right. A. That is the sound track developer?

XQ456. That is right. A. And the picture negative?

XQ457. Yes. A. For the same lengths of time?

XQ458. No. We want the positive gamma in the normal process that defendant uses in making its positive prints? A. The positive stock carrying the sound negative, developed in the sound developer, develops to a gamma of .52.

XQ459. Can you give us the gamma for the
702 combined picture and sound on the defendant's positive stock? A. The combined picture and sound, I have no specific data on that, that is made in the formula. There has been no formula disclosed for the development of the positive, combined picture and sound positive.

XQ460. I don't care about the formula for that. I say taking it this way, to get it clear: Where they are developed, their sound positive stock in their sound developer, and their picture negative stock in their picture developer, and the print onto the common positive, the sound and the picture records, and develop that,

that final strip as the resultant gamma? A. That is the final positive?

XQ461. Yes. A. I know from my general knowledge of the subject that that is developed to a gamma of approximately 2.

XQ462. Will you tell us how you know it from your general knowledge? A. Well, just my general experience for a great many years in the process of making motion pictures. We know, we have measured various of the contrasts obtained in various developers, used in various 704 places, and we know that that procedure is one which gives a satisfactory picture quality.

XQ463. And do you know that that is the gamma of the defendant's final product? A. I don't believe I have any actual measurements before me made in a developer compounded precisely according to that used by the defendant, but I am normally certain that that is the practice, to develop the final picture positive to a gamma of approximately 2. It is the common practice in making good pictures.

XQ464. Now, you gave us some figures result- 705 ing from those tests that you say you had somebody make up for you with respect to gammas yesterday. Will you state what were the limits of the gamma as those tests showed, both for the sound and picture positive prints? That is, your strips, I assume, had indicated some variations in gamma, your sensitometer strips? A. Variations with what factor; with time of development?

XQ465. Variations as to contrast for different times of development. That is, all of the strips, the tests on each strip were not identical, were

706 *Lloyd A. Jones—For Defendant—Cross.*

they? A. You mean repeat strips of the same development time, what you might call the experimental variation in measuring: is that the idea?

XQ466. I will put this question to you rather than have you answer the other. What were the time limits of the development of those strips which you tested or had tested? A. The original group of tests on which the results were based, the time of development varied from three min-
707 utes to twenty minutes. Five different times of development were used in that interim. From the results of those measurements we plotted a time gamma curve for each developer and for each stock. That gives us a relation between the time of the development and gamma. A smooth curve drawn through those points then determines that function. From that curve we are able to read the gamma obtained in any time of development within those limits on any of the materials, on either of the materials and the development.

708 XQ467. Will you tell us to what time the value of .52 corresponds, what time of development? A. In which developer, and with which stock?

XQ468. As to both, as to the sound stock first, as to the sound stock in the sound developer? A. The positive motion picture stock developed in the sound developer to give a gamma of .52 required a development time of 4.4 minutes. The same stock, namely positive, developed in the picture formula to a gamma of .52 required a development time of six minutes.

XQ469. Will you give us the same informa-

tion with respect to the picture stock in the picture developer? A. I have given you in that question the information on positive stock developed in the picture developer, that was the second value I gave.

XQ470. Well, you misunderstood my question when you gave the information. A. I am frankly not quite sure what you want to know. I am very glad to give you all this information, if I can just be sure what you want. Those values that I just gave are correct, as near as 710
I can read this curve here.

XQ471. Well, now, can you give us the corresponding data with the picture stock in the picture developer? A. The picture stock in the picture developer?

XQ472. Yes. A. That is for a gamma of .52?

XQ473. No, that is to a gamma of .6, didn't you give a gamma of .6 yesterday?

The Court: No, he said .52 just now.
Mr. Ward: No, I mean yesterday. 711

XQ474. Yesterday, didn't you say that the picture stock was developed to a gamma of .6? A. I think I said .55, if I am not mistaken.

XQ475. Well, whatever you said, that is the gamma I want now in this question. A. The picture stock; the negative stock, we will put it that way, the negative stock developed in the negative formula gives a gamma of .57, as I read it now in 12 minutes.

XQ476. Are you reading it right as you say now? A. As near as I can read it on this coordinated paper, yes.

712 *Lloyd A. Jones—For Defendant—Cross.*

XQ477. What is the value of gamma for negtive sound development in defendant's negative sound developer at 65 degrees for four and then for five minutes? Give me each. A. The positive stock on which the negative sound record is made developed for four minutes in the defendant's sound developer, gives a gamma of .45 and developed for five minutes, gives a gamma of .59.

XQ478. Now, can you tell us what is the
713 value of the gamma for defendant's negative picture stock in defendant's negative picture developer at 65 degrees for nine minutes and also for twelve minutes? A. At nine minutes on the negative picture stock developed in the negative developer, nine minutes gives a gamma of .48 and for twelve minutes, a gamma of .57.

XQ479. I believe you testified yesterday that the time of development affected the gamma within certain limits? A. Yes, that is true.

XQ480. And I believe you testified that gam-
714 ma is affected by the concentration of developer, other factors being equal? A. That is correct.

XQ481. I believe you also testified that it is difficult to maintain the concentration of developer constant in practice? A. It is difficult to obtain it perfectly constant. It can be maintained fairly constant. In any such problem there is always a slight variation.

XQ482. And that slight variation will have some material effect on the resulting gamma, will it not? A. It may have a measurable effect, a measurable but small effect. It will depend entirely upon the precision with which concentration is controlled.

XQ483. I was talking about the practice, running these machines as they are run in practice there would be some variation, and that variation would affect gamma? A. That is true, there will be some variation.

XQ484. And that variation is such that it is worth while looking after, isn't it? A. Yes; it is necessary to take steps to maintain the concentration at a constant value.

XQ485. That being so is it not desirable to have the sensitometer strips accompany the 716
picture film in the development machine to get the correct gamma on that picture film from the strip readings of your sensitometer? A. Yes, that is true.

XQ486. I then take it that sensitometer strip readings that were derived from sensitometer strips which did not accompany the film would not be very reliable? A. No, that is perfectly true, they would not be reliable as a means of controlling the constancy of the process; they are perfectly reliable for some other purposes.

XQ487. Well, they wouldn't be reliable in 717
determining the gamma of the picture strip that didn't go along with it, would they? A. No, that is perfectly true.

XQ488. Is it true that the development accorded the positive print must bear a definite relation to that which has been accorded the negative? A. Yes, that is desirable within certain limits.

XQ489. Was the data on gamma which is contained in defendant's statement in Exhibit 12, *i. e.*, that the defendant's film over-all gamma was approximately 1.2, was substantially

1.2, and the over-all gamma of sound record substantially 1, was that derived from or based upon these sensitometer strip tests that you had made up at Eastman's? A. No, they were not.

XQ490. Your strip tests are in accordance with those figures or different from them? A. they agree fairly well. As I pointed out in my testimony, the technique of making tests in the laboratory does not precisely duplicate the agitation conditions which exist in the developing
719 machine during operation. We cannot expect such tests to agree precisely with tests obtained by actually running the sensitometer strips in and through the developing machine.

XQ491. To what extent did the results obtained from your test very with respect to the figures given in this statement? A. To what extent?

XQ492. Yes, namely, over-all gamma of 1.2 for picture and over-all gamma of 1 for the sound? A. These laboratory tests which were made chiefly to show character of development,
720 appear to give a development rate slightly lower than that obtained in the developing machine.

XQ493. State what it is, will you? A. I can only say that in 12 minutes development of the negative stock in the negative developer I obtained a gamma of .57, and the figures you refer to, assuming that the positive film is developed to a gamma of 2, would indicate that in the machine the defendant obtains a gamma of .6 instead of .57. A difference of .03.

XQ494. You stated that you were not hired or paid to testify as an expert here. You were just down as a favor to the Western Electric Company? A. I think you may regard it as that.

XQ495. Well, tell us just what the fact is. Why are you down here to testify? A. I was directed to do this work by my superior.

XQ496. Do you know Dr. Donald MacKenzie? A. Yes, I have met him on some occasions.

XQ497. Do you know what concern he is connected with? A. He is connected, I believe, with The Electrical Research Products or some—I am not sure whether it is that exact organization, but that group of organizations.

XQ498. Somewhere in the Western Electric 722
family? A. Yes.

XQ499. Is he one of their consulting engineers? A. I am not sure just what his title is. That sounds like a satisfactory title.

XQ500. Do you know whether he is president of the Hollywood Section of the Sound Motion Picture Engineers, or whatever they call themselves? A. I am not sure whether he is at the present time. I think he was elected to that office. I am not sure whether his term has expired or not.

XQ501. Do you regard him as a man of high 723
authority in the art of sound picture recording and reproducing? A. Yes, I have a very high regard for his ability.

XQ502. I refer you to an article of Dr. MacKenzie's, the same Donald MacKenzie, entitled "Straight Line and Toe Records with Light Valve," published in the Journal of the Society of Motion Picture Engineers, Volume 12, No. 2, the article commencing at page 172 of that volume, the volume being that of August, 1931, publisher's name, and so forth, eliminated, in which he discusses the Western Electric system,

and I read you the following from page 173, middle of the page:

> "The requirements of pictorial reproduction have been thoroughly discussed by L. A. Jones, who shows that faithful reproduction of brightness values is attained only when the overall gamma is unity, with the further restriction that negative exposure and positive printing
> 725 shall be confined to the straight line portions of the respective H and D curves. In practice it is common to use an overall gamma greater than unity and allow the positive print to intrude into the toe of the positive curve, for reasons depending on lens performance and conditions of screen illumination."

Do you agree with Dr. MacKenzie's statement here? A. Yes, in general. If I were going to discuss the statement, there are many things,
726 many factors which would have to be taken into consideration in order to answer that question fully. We know that there are many factors in the process of tone reproduction which we may consider to be of a second order which influence the overall gamma to which the positive must be made in order to obtain a precise reproduction of tone values. For instance, there are certain losses of contract due to the projecting system which must be compensated for.

The statement which I made which he refers to there I think is a perfectly valid one, and

in my publication on the subject, I point out specifically that all of the characteristics of the photographic materials, of the printing systems, of the projection systems, of the development of the positive and negative, must be known and measured under the practical conditions under which the materials are to be used. If those precautions are taken and an overall gamma of unity is obtained, and by that I mean an overall gamma of unity when comparing the reproduction with the original, then truthful render- 728
ing of tones of the object will be attained.

XQ503. I refer you to another article by the same Dr. MacKenzie entitled "Sound Recording with the Light Valve," commencing at page 730 of Transactions of the Society of Motion Picture Engineers, Volume 12, No. 35, Meetings of September 24-28, 1928, and I refer you particularly to the following paragraph near the bottom of page 737:

> "In 1924 we concluded that the optimum choice was positive emulsion de- 729
> veloped to unity gamma for both sound negative and sound print. This is feasible for sound records separate from pictures, but a compromise must be made for the combination of sound and picture in a single positive print. Here the positive development required for a satisfactory picture is always to a gamma far above unity."

Do you agree with Dr. MacKenzie? A. It depends entirely on what he means by "far". I know definitely that satisfactory reproduction

of pictures can be obtained by a gamma product of something over unity, perhaps 1.2. That is a reasonable value.

I should point out, perhaps, that in speaking of gamma, as we have been doing thus far we are speaking of gamma as measured diffusely. Now, the effective overall gamma of the picture projected, must be computed on the basis of the specular gamma of the positive material which is being projected. That, of
731 course, tends to give a compensation for certain contrast losses which we meet in the optical system.

XQ504. Do I understand you to mean by that profound language that you are using there that we have been talking about a different gamma from what Dr. MacKenzie has been talking about? Answer that question first, just yes or no. A. Only partially. I cannot answer that by yes or no, because we are talking about two gammas.

XQ505. Well, now, do I understand further
732 from your next to the last answer that what you are trying to point out is that the gamma of the picture we see on the screen necessarily differs from the gamma of the positive print from which it is projected, to some extent? A. I don't quite know what you mean by the gamma of the picture we see on the screen.

XQ506. Well, the contrast in the picture we see on the screen? A. Differs from—

XQ507. The contrast of the positive from which it was projected. Wasn't that what you were trying to bring out in that answer of yours just now? A. Yes, that is true.

XQ508. Then you ought not to have much trouble in understanding my question, should you? A. (No answer.)

XQ509. Now, following that up, was it not the intention of your said answer to point out that Dr. MacKenzie was probably talking about the contrast of that picture on the screen which he said must be far greater, whereas you were talking about the contrast on the positive, is that right? A. No, I don't think that is necessarily true.

XQ510. I am trying to find out in what way 734
you were qualifying, either intentionally or unintentionally—I am not casting any aspersions —in what way you were trying to qualify or reconcile some of your testimony with Dr. MacKenzie's statement. You said he had to use the words "far greater", and that he had— A. I am only trying to point out that in following through all of the computations we must go through in solving the tone reproduction problem, there are many, many things which have to be considered, many factors which have to be 735
considered, among which one is the difference between the contrast of the positive film as measured in a densitometer of the normal type and the effective contrast, as it is, let us say, measured, when it is being projected onto the screen, and that, furthermore, due to the characteristics of a projecting system, there is a certain lack of faithfulness, we will say, in the reproduction of the contrast of the positive on the screen.

Now, in trying to solve these problems by the tone reproduction method, we must consider

all of those facts. Now, it is difficult from the particular statement which Dr. MacKenzie has made to know exactly what he had in mind. That is the thing I am trying—

XQ511. How do you interpret his articles? Is he talking about the contrast of the picture on the screen or is he talking about the contrast of the film from which the picture is projected? A. I rather think, from the reading of that, that he is talking about the contrast
737 of the picture, of the film as projected.

XQ512. The contrast of the film? A. I think so.

XQ513. And that is precisely what you have been testifying about, is it not? A. Yes.

XQ514. All right. Then we finally get you and Dr. MacKenzie down on the same platform again. Now, if Dr. MacKenzie, by any stretch of the imagination, should have been talking about the contrast of the picture on the screen, I take it from your testimony here, that for a given contrast of the positive film from which
738 the picture is projected, you will have less contrast of the picture on the screen; isn't that right? A. Yes.

XQ515. So then, if Dr. MacKenzie should happen to have been talking about the contrast of the picture on the screen, his statement about gamma being far greater would be even more apart from your testimony; would it not? A. Yes, I think so, if he were talking about that particular characteristic—

XQ516. Now, perhaps you can tell us whether you consider the differences between a gamma of I and a gamma of 1.2, as 1.2 being far greater than 1? A. No, I do not.

XQ517. Then, in your opinion, Dr. MacKenzie was talking about a much greater difference than the difference between 1 and 1.2? A. My idea of what may be far greater may be entirely different than Dr. MacKenzie's.

XQ518. Do you know S. S. A. Watkins and C. H. Fetter? Do you know either of those men? A. No, sir, I do not.

XQ519. You never heard of them? A. No, I believe not. I cannot recall having heard of them.

740

XQ520. Don't you read these journals of the Society of Motion Picture— A. Yes, I read most of them. I don't read all of them.

XQ521. Don't you know that this man Watkins is a very prominent man in this art, have you never read any of his articles? A. I am afraid I missed that article.

XQ523. Have you ever read any of his articles? A. Not to my knowledge.

XQ524. And you don't know that he is connected with the Western Electric or any of its subsidiaries? A. No.

741

XQ525. I refer you to an article by said Watkins & Fetter, entitled "Some Aspects of Western Electric Sound Recording System," in the Journal of the Society of Motion Picture Engineers, Volume 4, No. 5, for May, 1930, and I read from page 524 the following paragraph:

> "Ordinarily in photographic work particularly for screen presentation, light values on the screen are quite different from those on the original picture. Due to limits in camera, in emulsion, and in pro-

> jection apparatus, it is usually necessary for pleasing effects to obtain in screen pictures far greater contrast than actually exists in the original object photographed."

Do you agree with that statement? A. No, I do not agree with the statement.

XQ527. Were you at the May meeting of the Society of Motion Picture Engineers in 1930?

743 A. Where was the meeting held?

XQ529. I refer you to an article written by Lloyd A. Jones and Clifton Tuttle; that Jones is you, is it not? A. Yes.

XQ530. Entitled "The Effect of Projection Lens Flare upon the Contrast of the Motion Picture Image," commencing at page 153 of the Transactions of the Society of Motion Picture Engineers, No. 25, Meeting of May 3-6, 1926, and to the following paragraphs, first the one commencing at the bottom of page 160:

744

> "When the picture is of low average density the effect of lens flare on contrast is very severe. When the subject is a seascape, close-up views of white buildings or bright landscapes containing a large amount of sky, the ideal contrast may be reduced to one-half or one-third of its value."

Is that correct? A. That is correct.

XQ531. Is that your testimony in this case? Do you affirm that as your testimony? A. The statement, I said the statement is correct.

XQ532. I say, do you accept that as your testimony in this case? I ask you if that is a correct statement of the facts? A. It is.

XQ534. And you accept that as your testimony in this case? A. Yes.

XQ535. I read you the following from page 162 of said article—I will first read from page 163, the fourth paragraph, under "Conclusions":

> "The effect of lens flare on quality of 746
> tone reproduction is to warp the shape of the reproduction curve and to depress the contrast."

Is that statement correct? A. Yes, it is correct.

XQ536. And I read you from page 162: "It is customary in practice to attempt to compensate for loss of contrast due to lens flare by increasing the time of development in making the positive, thus increasing the slope of the straight line portion," meaning straight line 747
portion of the curve, I assume. Is that a correct statement? A. I think it is correct if it is applied to certain practices. I wouldn't say that it is universally used in an attempt to correct.

XQ537. Mr. Jones, reverting again to the Journal of the Society of Motion Picture Engineers, Volume 14, containing the article of said Watkins and Fetter, did you say that you had never read that article? A. I believe I have never read that.

XQ538. Well, according to this publication

you are down here as editor *pro tem.* A. That may be perfectly true.

XQ539. And still you wouldn't have read the article over? A. Not necessarily; when I was editor of this Journal, I frequently referred articles which I felt that someone else was better able to criticize, to other people, and they were put in on that assumption, or on that basis.

XQ540. To come back to the place that meet-
749 ing was held, I find the spring meeting, according to the inside of the cover of this publication, it says: "The spring meeting was held at Washington, D. C. at the Wardman Park Hotel." Does that refresh your memory any? A. Yes, I attended that meeting, not all of the sessions, however. I think I was there two days of the sessions.

XQ541. And you do not remember whether this article was read in the two days that you were there? A. No.

XQ542. Referring back a moment to your
750 own article, a portion of which I have read to you, and the language used in your article, "thus increasing the slope of the straight line portion," that means increasing the overall gamma for the combined record, does it not? A. Yes.

XQ543. Now, Mr. Jones, isn't it a fact that these various extracts that I have read you from your own article all tend to point to the fact that the gamma of the picture should be substantially greater than the gamma of the sound which is supposed to be unity? A. I think it points certainly to the—it indicates that the gamma should be somewhat greater.

XQ544. Doesn't it do a great deal more than indicate? You go on and talk of loss of gamma by lens flare and what-not, and harp on it. Aren't you, as a scientific man, trying to inform your less experienced and educated followers in the art that they should have a gamma of the picture so great that when this gamma is dissipated or partly dissipated through lens flare and what-not, you should still get the desired contrast on the screen? A. Yes, it is a question of magnitude, as to how much you should raise that gamma. 752

XQ545. And isn't it true, to get the most faithful reproduction on the screen, image on the screen, of a particular object, that you should have unity gamma or contrast of the image on the screen? A. That is correct.

XQ546. And notwithstanding that, do you still maintain that this matter of a difference from a gamma of unity, of 1 and 1.2 is inconsequential, immaterial? A. The difference between 1 and 1.2?

XQ547. 1 and 1.2. A. Yes.

XQ548. Referring to that part of your article that I have been reading from at page 161, which says that the ideal contrast may be reduced to one-half or one-third of its value, would the corresponding variation to compensate for these differences in contrast be substantial or negligible? A. In those particular cases it probably would be substantial, but you must remember that that magnitude of reduction of contrast is only obtained with certain particular brightness distribution in the field. Under the average conditions of studio practice the reduc-

tion of contrast is not anything like as great as that ordinarily. In that paper we quoted some extreme examples.

XQ549. Pictures are taken out-of-doors every day, aren't they? A. Surely.

XQ550. Didn't I understand you to tell me that under your present practice it would not make any difference where a picture was taken, indoors or outdoors, the opening of the lens shutter is made so that the illumination was the
755 same on the picture? A. The exposure.

XQ551. Yes. That being true, isn't that article applicable to indoor work as well as outdoor work? A. Yes, it is.

XQ552. Then what difference are you trying to draw attention to by referring to indoor work? A. I am trying to point out that in making certain illustrative references in this article we referred to particular compositions in which the resulting contrast was abnormal, much greater than in, we will say, the average case. Frequently, in discussing any subject, it is illus-
756 trated by giving an extreme example.

XQ553. The fact, as I understand your testimony to be, that it is necessary to have the overall gamma of the picture on the positive film greater than unity or 1; is that the reason why defendant produces a picture positive with an overall gamma of 1.2 rather than 1? A. Yes, I believe it is.

XQ554. And yet you say that that difference between 1 and 1.2, a 20 per cent. difference, is inconsequential and hardly noticeable? A. That is the case, according to tests.

XQ555. And in your opinion, it has no ma-

teriality? A. It certainly has some effect, naturally. It is a question of magnitude.

XQ556. Now, perhaps you will tell me why they take such studied means of maintaining that difference if it doesn't amount to anything? A. They undoubtedly have found that that particular practice gives them satisfactory picture quality.

XQ557. Well, what does that mean? A. It means a quality on the screen which gives a pleasing and satisfactory reproduction of the 758
scene which has been photographed. It does not necessarily mean that that reproduction is a precise reproduction of the brightness distribution in the object.

XQ558. All right. If it is inconsequential, why don't they make it unity instead of 1.2? Why don't they get the pleasing effect with unity? A. They could get a very pleasing effect with unity, I think.

XQ559. You think. Do you know? A. Yes, I have made a picture using a gamma of unity, and I think the result was very satisfactory. 759

XQ560. Under the same conditions as exist in the studio? A. Not in their studio, but in other studios and outdoors.

XQ561. Did you make these personally? A. Yes, sir.

XQ562. Do you still maintain that this difference of 1 and 1.2 doesn't amount to anything at all? A. I do not say it does not amount to anything, I say it is not of appreciable importance. For instance, you can make two pictures, one having an overall gamma of unity, and the other having an overall gamma of 1.2, and

760 *Lloyd A. Jones—For Defendant—Cross.*

under favorable conditions, those can be detected.

XQ563. You have testified in answer to Q75 that according to defendant's process as given in defendant's statement, the sound and picture records are developed to "substantially the same contrast," and in answer to Q76, you stated that it is the usual practice in like films of straight line records, to develop them "to substantially the same contrast," and you fur-
761 ther testified, in answer to Q77, that the 20 per cent. difference in the overall gamma of defendant's sound and picture positives is inappreciable and that it was inappreciable with respect to the picture positive, and in Q77 that this variation of 20 per cent. in the sound record is inappreciable. That is a substantially correct statement of your testimony? A. I think so.

XQ564. I now refer you to an article of the same Dr. MacKenzie of the Western Electric family above mentioned in the transactions of
762 the Society of Motion Picture Engineers, Volume 12, No. 35, and read you the following from page 739, near the top of the page:

> "It has been calculated that if the overall gamma departs from unity by .2 in either direction, a harmonic of five per cent. amplitude in the fundamental will be introduced. Experimentation has shown that a five per cent. harmonic is the least detectable. We state then the tolerance on the overall gamma for the sound track at .8 to 1.2. Variation of a

corresponding amount in the contrast of the picture print is intolerable; therefore, greater latitude of contrast is permissible in the sound record than could be tolerated in the accompanying picture."

Do you agree or disagree with Dr. MacKenzie? A. I disagree.

XQ565. Very decidedly, I suppose? A. I disagree on his statement as to the picture.

XQ566. It is a flat contradiction of your testimony, is it not? Your testimony is a flat contradiction of Dr. MacKenzie's statement that I have read you, is it not? A. Relative to the picture. 764

XQ567. Relative to the picture contrast which you testified about and which he is talking about? A. Yes, I think it is.

XQ568. It so happens, does it not, that the variations Dr. MacKenzie is referring to here are the variations from unity or 1 to .8 or 1.2, that is right, isn't it? A. Yes, 1 plus or minus .2.

XQ569. In other words, a difference from unity of .2, a difference from unity of .2 either way? A. Yes, in overall gamma. 765

XQ570. And it so happens that that is exactly the difference that the defendant sets up in its statement, that is, a difference from 1 to 1.2, is it not? That is the difference they set up, is it not? You know that, 1 to 1.2. A. Yes.

XQ573. Can you tell us what is the relative cost of positive film stock used for defendant's sound negative as against the negative stock used for defendant's picture negative? A. No, I cannot tell you just what the difference is at

766 *Lloyd A. Jones—For Defendant—Cross.*

the present time. There have been some changes in the price at which those things are sold, and I am not in the selling end of the organization. I do not know at the present moment what the difference is.

XQ574. Which is the cheapest, do you know that? A. Positive film.

XQ575. No doubt about that? A. No.

XQ576. Would you say it is approximately a fourth as cheap, approximately one-fourth?
767 A. One-fourth or a third, or something of that order. I don't know the exact price at the present time.

XQ577. I believe you testified the positive stock had a finer grain characteristic, and you also testified that negative picture stock was intentionally developed slower for the purpose of producing a finer grain in that stock, is that right? A. I have testified that the positive stock has a finer grain than the negative stock, yes, sir.

XQ578. And did you also testify that the
768 negative picture stock was intentionally developed slower for the purpose of producing a finer grain in that stock? A. It is developed slower in order to give the sulphite an opportunity to act on the grain structure, yes.

XQ579. Now, my question was correct, was it not, to you? Answer that yes or no.

Mr. Neave: I object to that.

The Court: I will let him answer it if he remembers what he said.

A. Yes.

XQ580. Then as far as concerns the grain of the stock only, it would be desirable for the de-

fendant to use a positive stock for both the recording of the picture and the sound, is that right—so far as concerns the grain of the stock only? A. Yes.

XQ581. The positive stock being, as you say, a fourth to a third cheaper than the negative stock and having the desired fine-grained character, it would be desirable for the defendant to use the positive stock for sound and picture negatives, if there was sufficient light in the studio for exposing the positive stock which you 770
have testified was relatively slow-acting with respect to exposure, is that right? A. I think there are some other considerations that would have to be given in using a positive stock for making the picture; for instance, such questions as its latitude, its ability to render a picture of satisfactory quality.

XQ582. The negative stock? A. No, the positive stock. You asked about the positive stock?

XQ583. I did, yes. A. And I say that would require some consideration other than the mere fact that it is a slow, fine-grained material. We 771
would have to consider also its quality from the standpoint of its ability to render the picture satisfactorily.

XQ584. Don't you know its ability to render the pictures satisfactory or unsatisfactory? A. The material has a somewhat shorter latitude than negative material when the two are developed to the same gamma, the same contrast. That might be an objection to its use for the making of negatives.

XQ585. Do you consider that consequential? A. I think it is possible it is. I don't know. I

772 *Lloyd A. Jones For Defendant—Cross.*

have not considered that thing. The decision as to whether a particular photographic material is suitable for certain purposes requires some consideration.

XQ586. Well, now, let us get down to what you actually know. In your experience and the experience of your concern, you must have tried positive stock for pictures; certainly you have done that, have you not? A. Well, in a very limited way—for making negatives, you mean?

773 XQ587. Yes. You have tried it a great deal for making positives, have you not? A. Yes, sir.

XQ588. And your experience in making positive gives you a right to decide certain factors about the making of negatives, does it not? A. Certain factors. I don't think it necessarily gives the information required to decide all factors.

XQ589. With this stock being about 1 to 4 or 1 to 3 with respect to negative stock in cheapness, and having the fine-grained charac-

774 teristics that you say are desirable both for picture and for sound, do you mean to say that it has never been investigated whether that positive stock could be used for negative picture-taking? A. I think it has been investigated to a certain extent.

XQ590. Quite thoroughly, has it not? A. I don't know what you mean by "thoroughly." Certainly some experiments have been made.

XQ591. I guess you and I won't agree on qualifying words ever; but very carefully, and so that a pretty definite conclusion has been reached? A. Yes, we will admit that.

XQ592. Now, the real reason why it is not used is the reason that I give in this question, is it not, that it does not— A. That it is slow.

XQ593. That it is too slow? A. Yes, that is right.

XQ594. That is the real practical reason? A. Yes.

XQ595. That is, if it was used for negative stock with the illumination available in these studios, you would get under-exposure? A. Yes.

XQ596. And you have testified at pages 266- 776
267, in substance, that it almost essential for making negatives in studios, meaning picture negatives, where it is not possible to light the scene sufficiently, to use a negative stock which is very sensitive to light, is that right? A. Yes.

XQ597. As I understand your testimony, you have testified at page 268 that defendant uses positive stock for sound negatives because there is plenty of light in the sound-recording camera to give adequate exposure, is that right? A. Yes.

XQ598. Then defendant uses the negative 777
stock for pictures to avoid under-exposure of the picture negative under its lighting conditions, and having done that, they are forced to use separate development of this picture negative and the corresponding sound negative on positive stock to get desired contrast in each; isn't that a correct statement? A. Yes, to get the desired contrast in each.

XQ599. Then in defendant's process, to cure the difficulty arising from using different lighting conditions in photographing the picture and sound negatives, the defendant uses different

778 *Lloyd A. Jones—For Defendant—Cross.*

films stock for the second and picture negatives and separate development treatments, is that right? A. Yes.

XQ600. In answer to a leading question, you testified at page 268, Q50, that you found no mention in the patent in suit about using a different kind of stock for the sound negative film, as compared with the picture negative film. Do you find it stated anywhere in the patent that the process is to be limited to the use of the
779 same stock for pictures and sound, or that the process is only applicable where the same stock is used for the picture and sound negatives? A. That is not thus specifically stated.

XQ601. No statement at all about it, is there? A. There is no statement, but it speaks specifically of recording the sound and picture on the same strip of film.

XQ602. As the old practice, and the modification where the two are secured together and then separated; right? A. Yes, that is correct. We certainly would conclude from that that
780 they were contemplating the use of the same photographic emulsions.

XQ603. In those two cases? A. Yes.

XQ604. Now, with respect to the particular difficulty pointed out by the patentees, which is one difficulty that the process takes care of, *i. e.*, different lighting conditions in exposing the picture film and the sound film, you will get a latent image in the picture film which, if you develop that negative exactly as you do the sound negative, it will result in an undesirable contrast for the picture record, is that right? A. The patent, as far as I can see, states noth-

ing about differences in exposure between the sound and the picture negatives. It speaks of differences in exposures of different scenes or takes of the picture negative itself, and it is directed toward a method of correcting those difficulties.

XQ605. Well, now, bringing in that statement of yours and qualifying my question with it, if you please, will you now answer my question: that is, you get under the patent a latent image in the picture film which, if you develop that 782
negative exactly as you do the sound negative, it will result in an undesirable contrast for the picture record, will it not? A. It would in some cases, depending upon exposure in the negative—

XQ606. Mr. Jones, would it not in the case where the picture is over exposed or under exposed? A. Yes.

XQ607. That is the only thing the patent is talking about, from your own testimony: is that right? A. Yes.

XQ608. So you do get this latent condition 783
then? A. Yes.

XQ609. Now, with respect to defendant's process, when you have exposed the sound film and the picture film on their respective film stocks, as defendant does with the lights it uses for picture and for sound recording, you will get a latent image on the picture film, which, if you develop that picture negative exactly as you do the sound negative, it will result in an undesirable contrast for the picture: is that right? A. That is true, because the two stocks are different, the two photographic stocks are different. They have different characteristics.

784 *Lloyd A. Jones—For Defendant—Cross.*

XQ610. And because the lighting of the sound and the negative picture are different, under your own testimony? A. Well, naturally they are different, because they are recorded in entirely different manners. One is a picture and the other is a sound record.

XQ611. Then, there is nothing wrong with the question that I have put to you, is there, which brings in those two factors? A. No.

XQ612. Have you obtained the negatives that
785 I asked for from which the photographs, Defendant's Exhibits D and E were made, and which you said you would probably have here by yesterday? A. Yes, they were obtained.

XQ613. Notwithstanding the reasons you have given for defendant using the process that it uses in making its positive sound picture records, it is a fact, is it not, that it does produce on a single sensitized film sound sequences and picture sequences longitudinally arranged side by side on the same face of the same sensitized film, and that in obtaining such a positive film,
786 the sound sequence is photographed on one film and the picture sequence is simultaneously photographed on another film, and that these two negative films are separately developed in a manner suitable for each, and are then successively printed on the positive film? A. Yes.

XQ614. With regard to the Walker patent, is it not a fact that, except in the modification where Walker proposes to obtain an enlarged sound record on his picture record, his disclosure is nothing more than the old system referred to by the patentees of the patent in suit, wherein there is a single negative on which the sound and pictures are taken, and which is developed as such, that is, while both are on the same film,

i. e., no separate development, and from which the sound and picture records are then printed onto a single positive? A. Yes, with the exception of the other form—

XQ615. I am coming to that now. And then commencing at line 40 of page 3 of Walker, he describes a modification or additional feature, wherein, in order to get an enlarged sound record on his picture film, he takes his negative record containing the combined sound and picture negatives and he prints onto a positive film 788 the picture sequence and then by a photographically enlarging system, he prints from that same negative carrying the sound and pictures, the enlarged sound record upon the positive onto which the picture record was printed from said negative, is that correct? A. Yes, that is correct.

XQ616. In neither of the alternative methods suggested by Walker does Walker separately develop or have any opportunity for separate development of the negatives: is that right? A. That is correct.

XQ617. And the Walker process is not the 789 process used by the defendant? A. No.

XQ618. What emulsions were ordinarily used on positive and negative motion picture films 20 years ago? A. The emulsion used on positive films is substantially the same as that used at the present time, a low-speed fine-grained high-contrast emulsion—

XQ619. What base, silver or what? A. I did not understand that last question.

XQ620. Silver bromide emulsion or what? A. A silver halide emulsion.

Mr. Neave: You did not finish your answer, Mr. Jones.

790 *Lloyd A. Jones—For Defendant—Cross.*

The Witness: The negative emulsion was a relatively high-speed type, but not sensitive to all of the colors, such as the present panchromatic emulsion. Aside from the difference in color sensitivities, practically the same as that used now, although, of course, certain improvements have been made in the course of that time.

XQ621. Silver halide? A. Silver halide.

791 XQ622. Why does Craig—referring to the Craig patent—why does Craig disclose the use of infrared rays for projecting his sound record, rather than ordinary light? A. One of the forms disclosed by Craig involves the printing of the sound records on the opposite face of the positive film. In order that that record should not interfere with the picture record, it is necessary to make it transparent to visible light, and in order to obtain the sound modulation he must make the differences in density in a part of the spectrum to which the eye is not sensitive.

792 XQ623. Boiling that down to a few words, the fact is that Craig resorts to this attempted expediency in order that the projection of his pictures which occupy the front face of the film will not be interfered with by his sound record, which occupies the back of the film: is that right? A. Yes, that is correct.

XQ624. Mr. Neave read you from the Craig specification where it stated, line 113 to 120, at page 4:

"It will be noted from what has gone before that so far the negative of the sound record and the negative of the pic-

ture record have been made upon separate strips or films. It is necessary, therefore, that these two negatives should be photographically printed upon one film or upon opposite sides thereof."

You testified that this language indicated to you that Craig contemplated printing the sound and picture records onto the same film and either upon the same face of the same film or upon opposite faces. Did you mean by that that Craig suggested putting the sound record and the pic- 794
ture record side by side on different portions of the same film or merely that he would have the two records, sound and picture, superimposed one on top of the other on the same side of the same film by the same kind of double emulsion layers—by some kind of double emulsion layers? A. Well, he did not suggest either of the alternatives you mentioned, but the language to me clearly indicates that he at least thought of printing the two records on either the same face or the opposite faces. Now, just how, he does not specify.

795

XQ625. Well, now, can you tell me what you mean by your last, that Craig does not suggest it, suggest that he would do this, but that you infer that he would do it from what he said? A. No, I inferred from the language that he had thought of the possibility of doing it. The fact that he said they can be printed upon one film or upon opposite faces to me means that—

The Court: That quotation was from lines 113 to 120.

A. (Continuing.) He at least thought of printing them onto the same face, but for reasons of

796 *Lloyd A. Jones—For Defendant—Cross.*

his own, which he explains to a certain extent, attempts to put them on opposite faces.

XQ626. Now, I ask you where you get your justification for your statement that you infer that he suggested putting them on the same face? A. The only justification is in this language in this particular quotation.

XQ627. And the entire Craig specification is to the contrary, aside from those three or four words, is it not? A. Well, the preferred forms
797 he shows are to the contrary.

XQ628. Every form he shows is to the contrary? A. That is quite right.

XQ629. Every form he describes how to go about it or make is to the contrary? A. Yes, that is correct.

XQ630. The whole purport and tenor of his specification and disclosure is the idea of how to use two overlying records, sound on picture, overlying records, so that one will not interfere with the other, is that right? A. Yes, all of his disclosures, of his forms suggested for doing it,
798 relate to that thing.

XQ631. And do you think it is a fair statement to say that this language, "printed upon one film or upon opposite sides thereof", would convey to you, in the light of Craig's specification, that Craig was teaching the printing or suggesting the printing of the sound and picture on the same side of the same film, or do you think that the more natural or proper interpretation would be upon one film, *i. e.,* upon opposite sides thereof? A. I do not consider that the last statement, replacing "or" by "*i. e.*" is justified; it seems to me that that changes the sense of the sentence.

XQ632. Isn't it on the same film when it is on opposite sides? A. Surely; it is also on the same film when it is on the same face. 799

XQ633. Then, because he uses in those few lines a generic location, then a specific one with "or" between, you want to tell the Court that you think that should be interpreted as pointing to two specific ways of doing it? A. The possibility of two specific ways.

XQ634. The possibility of two specific ways? A. Yes.

XQ635. If you were reading this Craig specification, Mr. Jones, before you were employed as an expert in this suit, and reading it with a view of having before you the patent in suit, do you think you should have paid any attention to that? A. I think I should have interpreted that sentence just as I have. 800

XQ636. I direct your attention to page 2 of the Craig patent commencing at line 34 to line 50, which reads as follows:

> "A further object is to provide mechanism whereby the sounds may be recorded upon the picture carrying film of moving picture machines and reproduced therefrom, this film being so formed that the picture record and the sound record may overlie each other without the sound record interfering with the picture record, or vice versa. 801
>
> "A further object of the invention is to so form the film that the picture record may be taken in the ordinary manner and printed photographically upon one side or face of the film while the sound record may

802 *Lloyd A. Jones—For Defendant—Cross.*

be taken photographically and printed upon the other face of the film."

That is page 2 of Craig, No. 1,260,337, commencing at line 34.

You do not find in those objects of invention any suggestion other than that the two records should overlie each other, do you? A. No.

XQ637. And it is expressly stated that they should, is that right? A. Yes.

803 XQ638. On page 2 at line 58 it is stated: "A further object is to form a sound record upon a film capable of transmitting light, this sound record being formed by material which is pervious to ordinary white light but which is impervious to or affects the transmission of infra-red rays."

That again refers to overlying film conditions, does it not? A. Yes, that is correct.

XQ639. And to nothing else. I refer you to page 2, line 125, the second column, near the bottom of the page: "My invention is based upon
804 the fact that infra-red rays are invisible but that these rays will affect a properly sensitized photographic film." That again is directed entirely to this idea of overlying sound and picture films, is it not? A. Yes.

XQ640. I direct your attention to page 7, line 69: "The two main features of my invention upon which the invention is based are in the first place the provision of a film capable of receiving not only the photographic prints of the pictures to be projected, but also the photographic record of the sound and the use with these films of invisible rays for the purpose of reproducing the sound record."

This again is directed to the overlying sound and picture records only, is that right? A. Yes, I should think so.

XQ641. Have you looked at Craig's claims? A. Yes, I have.

XQ642. Is it not a fact that practically all of the claims are limited specifically to records being in overlapped relation? A. Yes; that is the case.

XQ643. Notwithstanding all those statements in Craig you still maintain that the interpreta- 806
tion you placed on those words is a proper interpretation? A. I think that is the case. It is certainly, in the claims the object of the invention is not the recording on the same face, but I feel that it constitutes a disclosure of the general idea of printing two records onto the same film.

XQ644. I never disputed that with you, that I know of, or asked you any question as broad as that. A. Well, I think further it constitutes a suggestion or disclosure of printing two records onto the same face of the film. 807

XQ645. And you still adhere to that conviction? A. Yes, that is my interpretation. It seems to me that is a suggestion definitely disclosing that idea.

XQ646. Mr. Jones, in your opinion could anyone take the Craig patent and following his instructions there make an overlying non-interfering sound and picture record? A. Not following his instructions in detail, but following the idea in general, I think it is quite possible.

XQ647. When you say that you mean following the broad idea of producing overlying pictures— A. The broad idea disclosed by Craig.

XQ648. You mean the broad idea of producing pictures and sound records? A. I mean something more than that. I mean the idea of producing overlying pictures and records in a manner as disclosed by Craig, that is, the use of invisible radiation.

XQ649. Invisible radiation for the sound? A. For the sound, yes.

XQ650. And visible radiation— A. Visible radiation for the picture.

809 XQ651. And when you get beyond that broad suggestion of the Craig patent, his disclosures and recommendations are quite impossible, are they not? A. No, some of his disclosures are quite definite and very suggestive and leading, of methods which may be developed for accomplishing that. He discloses, for instance, certain definite classes of materials which would be useful or operative in carrying out the idea.

XQ652. We will come to some of those in a minute. I refer you to page 3 of Craig, lines 30 to 40, where he states: "Many substances will
810 cut off visible light entirely but will let the infra-red rays pass nearly perfectly. Vulcanite, iodin, bromin and many other substances will permit the passage of these infra-red rays and more or less completely intercept the visible rays. Many substances, such as alum, cupric chlorid, water, oxygen, carbonic acid gas, very thin metallic silver and selenite will, on the contrary, permit the passage of visible or white light but will cut off more or less the passage of the infra-red rays."

Among the substances mentioned as being suitable for use in forming the sound record are alum, cupric chlorid, water, oxygen, carbonic acid, and very thin metallic silver and selenite.

Will you please explain how a sound record can be made using water as a recording material? A. Using water as such, I do not think it could be used, but using it in the form of water of crystallization is quite a different matter.

XQ653. Water what? A. Water of crystallization.

XQ654. That isn't what he says. A. He mentions that in another place.

XQ655. What about alum? A. Alum begins to absorb in the infra-red region at fairly long wave 812
lengths, pretty well out of the visible spectrum. Its absorption is probably due to water of crystallization in the alum.

XQ656. It is not satisfactory for that purpose, is it? A. Not particularly.

XQ657. Not at all from any practical standpoint, using it as Craig intended to use it here to reproduce sound by infra-red rays and shoot the picture light through the same emulsion? A. I am not sure that that statement is correct, because alum, while it is not a good absorber in what we call the near infra-red region, further 813
out in the infra-red, where it is perfectly easy to get plenty of radiation, it has quite an appreciable absorption value.

XQ658. You wouldn't like to put out a film made of that, would you? A. I do not think I would choose that particular thing.

XQ659. What about oxygen, a nebulous suggestion, no good? A. Correct.

XQ660. What about carbonic acid gas? A. Not practical.

XQ661. What about cupric chlorid? A. Cupric chlorid has possibilities.

XQ662. Not a very practical proposition, is it?

814 *Lloyd A. Jones—For Defendant—Cross.*

You wouldn't like to be in the business of manufacturing and selling such stock, would you ? A. I do not know that there is any particular objection to that; it has fairly satisfactory selective absorbing characteristics.

XQ663. From a purely technical standpoint? A. Yes.

XQ664. What about this transparent metallic silver and selenite; selenite is crystallized gypsum, is it not? A. Yes, I believe so.

815 XQ665. And when powdered it becomes opaque? A. Well, it becomes opaque when the powder is observed in the normal manner, but if that powder were immersed in a medium such as a lacquer or varnish having the same refractive index, it wouldn't be opaque.

XQ666. What have you got to say about the selenite? A. I do not think it is very practical.

XQ667. The patent states, page 3, line 64; "One of the substances which would permit visible light to pass but which is opaque or impervious to the infra-red rays is very thin metallic
816 silver." Can you describe just how an emulsion is to be formed with such a thin metallic silver which is transparent to visible light and not to infra-red rays? A. As a matter if fact, metallic silver in thin layers is not satisfactory for use; I would not attempt to use it.

XQ668. So we can drop that without going any further on it. Craig says, at page 3, line 54: "For the visible light picture record, there are many photographic prints (such as most any of the present forms of positive prints) which would interfere not at all with the passage of the infra-red rays, and it is therefore only necessary to provide a proper transparent coating on the strip

or film which will intercept more or less the infra-red rays and yet will not affect the passage of the rays of white light."

Will you please state what were "most any of the present forms of positive prints" which Craig refers to and which at that time would be *completely* transparent to infra-red rays? A. I do not know of anything that would be completely transparent to infra-red rays, but that is not necessary for the operation of the idea. It is only necessary that we have a sufficient selective absorption within the region in order to obtain the 818
desired modulation of the infra-red radiation.

XQ669. Were those film stocks silver film stocks? A. I assume that he is referring here to the ordinary print in metallic silver. There may have been other forms available at that time, such as dye-image prints, which he may have had in mind.

XQ670. And very thin metallic silver happens to be the very thing that Craig refers to as being impervious to the infra-red rays? A. Well, the question of the absorption of very thin metallic silver, and a developed silver image, are very 819
unrelated subjects. Metals in massive form have very different absorptive characteristics than when present in the finely-divided powdery coke-like mass which forms a developed silver image. We cannot draw direct comparison as to the transmission of one from data on the transmission of the other. As a matter of fact, in some cases they have very opposite characteristics. It depends upon the state in which that metal is present.

XQ671. You have testified that Craig shows two sound records printed on the same side of

the positive film alongside of each other. Is it not a fact that Craig teaches that when he uses a film like that shown in Fig. 8 with two sound records placed in parallel position on the film, that that is done for the purpose of producing a dialogue between two parties whose images, or picture images, are to be printed on opposite sides of that film so as to overlie the sound record? A. Yes, the two records are printed both overlying the picture record.

821 XQ672. And that is shown quite clearly in Fig. 8 of the divisional Craig patent, 1,260,338, where there are the two pictures, or the pictures of two parties completely overlying those two records, sound records, is that not so? A. I cannot say that from here.

(Mr. Ward hands Craig divisional patent 1,260,338 to witness.)

A. Yes, that is the case.

XQ673. Does Craig show or describe anywhere a sound and picture record on a single film where the sound and picture records do not overlie each
822 other so that they interfere one with the other if ordinary light was used to reproduce both? A. No.

XQ674. If Craig is at all operative as a commercial proposition, which I think we both have doubts on, how much would it cost, considering labor, time and material, to produce Craig's composite sound picture positive as compared to the cost of the sound and picture record produced according to the patentee's or defendant's method? A. I haven't the slightest idea.

XQ675. It would be very much greater in the case of Craig, would it not? A. Not necessarily.

XQ676. At page 309 of your testimony Mr. Neave stated on the record that the patentees in prosecuting their application for patent "apparently endeavored to distinguish this patent from their alleged invention," stating "that Craig's only object in making the two negatives on separate films was apparently convenience, in that he wanted to print on opposite sides of a positive film, and it would be easier to do that when the sound and picture records were on separate films."

Then Mr. Neave asked you if that statement 824
which I have just quoted was justified, in your opinion, and you answered "No, it is not." Then you were asked, "Why not?" and you answered, "Because Craig's chief object in doing as disclosed in this patent is to obtain the record so they do not interfere with each other, preserving the full width of the film for the picture and obtaining a wide sound record."

Now, I assume that in giving that answer you gave it with the understanding that you were testifying that the statement made by the pat- 825
entees which Mr. Neave read to you was an incorrect statement, is that right, namely, that you didn't agree with it? A. That I didn't agree, yes.

XQ677. Now will you please point out the difference between the purport and substance of the statement Mr. Neave read to you and your answer with respect to the reasons? A. It seems to me in my answer I pointed out that one of the Craig reasons for wishing to print on opposite sides was to preserve the full width of the film for the picture record.

XQ678. And the object in making the two neg-

atives in Craig is for the purpose of printing on the opposite sides, isn't that it? A. And he wishes to do that in order to have a full-size picture area.

XQ679. Then the difference you seek to draw is that he did it because he wanted to print on both sides, and that he wanted to print on both sides in your opinion, because he wanted to preserve a full field for his picture? A. Yes, in what he was trying to do, in the process he was
827 attempting to operate, he wanted to print on opposite sides.

XQ680. With reference to the Pedersen British patent, at page 314, Q166, commencing on page 314, you were asked, "Are those separate records," referring to the Pedersen records, "printed on the same positive film." And you answered: "Yes, they are." Now, in that Pedersen process, the wavy line sound record is not printed on the film at all in any photographic sense, but is merely mechanically embossed upon the surface of the picture film? A. That is a photo-
828 mechanical process, yes.

XQ681. You didn't mean to use that word "print" in the sense of any photographing printing operation? A. No, it is a printing operation, it is not photographic printing, it is embossing.

XQ682. Simple emboss with a curved stylus on the record? A. Embossing, which is a printing operation but not a photographic printing.

XQ683. And at page 315, Q167, you testify that the sound record, after having been printed on the thin metallic strip is developed by special technique of a photo-mechanical nature. You did not mean by your choice of the word "develop" to suggest to the Court that there was any de-

velopment of the sound wave on the metal strip in the sense of a photographic development, did you? A. That term "development" of a bichromate gelatine or bichromate fish glue by the application of hot water or warm water is quite common. They speak, for instance, of developing a carbon print by brushing it or spraying it with warm water. It is not a development process in which a reducing agent is used which develops a latent image. That is perfectly correct.

XQ684. The particular language in the specification to which your term or word "develop" 830 is directed is the following statement: "The latter," meaning the wave line that is then formed, "is then washed out in a warm water bath until the metallic subground appears." A. That is correct.

XQ685. That is a mere water washing process? A. That is washing with warm water and it is the process which in the gum bichromate and bichromate gelatine process is referred to as development.

XQ686. Or as fixing? A. No, it is referred to as the development of a print in those processes 831 using bichromate gelatine.

XQ687. But it is not at all developed in the sense that the patent in suit uses it? A. No.

XQ688. You were asked at Q168, referring to Pedersen, if there were "Two different kinds of treatment for the two records," and you answered, "Yes." You do not mean, do you, to suggest by answering "Yes," to those words that were put in your mouth, that there were different treatments or developments of the negative records? A. No. By "negative records," you mean the photograph images formed on the original film—

832 *Lloyd A. Jones—For Defendant—Cross.*

XQ689. Yes. A. —of sound and picture. There is no differential development for those two particular records.

XQ690. As a matter of fact, the negatives in Pedersen of sound and picture are in a single film strip, are they not? A. That is correct.

XQ691. And that strip is developed with those two records, sound and picture, as a unity? A. Yes.

XQ692. Just as the old process was that the
833 patentees referred to in the first part of their specification, sound and picture carried on the same film and developed as a unity? A. Yes.

XQ693. Still referring to the Pedersen patent, you were asked at 169:

"Are these two records printed consecutively or simultaneously on the same positive film." And you answered they were printed consecutively. You did not mean, by adopting those words put to you, to give the suggestion that the sound record was printed in any photographic sense? A. As I have already stated, that is a
834 photo-mechanical printing.

XQ694. This is another part of this Pedersen patent we are talking about now, as I understand it. In each case, it is not the photographic printing that we were talking of? A. It is a photo-mechanical printing, an embossing operation.

XQ695. At Q170, you were asked with respect to this same patent: "Is it done on two positive films of different character or of the same character?" Referring to getting the sound record and the picture record on the same positive film, and you answered, "It is all of the same character in the positive film." Now, why did you use that word "character" there, "the same charac-

ter'' in the positive film? A. I meant only to say that the positive film was of the ordinary type and with the emulsion on the one face all of the same type, and the sound embossed in the cellulose nitrate part, the base.

XQ696. Yes, but at 169—it seems to me these questions are rather pointed—at 169, it says, ''Are the two records,'' referring to Pedersen's, ''printed consecutively or simultaneously on the same positive film,'' and then at 170, it says, ''is it done''—that is, for that printing of the sound 836 and picture record—''Is it done on two positive films of different character or of the same character?'' And you answered: ''It is all of the same character in the positive film?'' Now, as a matter of fact, in Pedersen, the sound wave is embossed on the back of the film, is it not? A. Yes, that is correct.

XQ697. And the picture print is on the front or emulsion side? A. That is right.

XQ698. Then what right have you to use the terms ''It is all of the same character in the positive film'' in answer to the question— A. The answer was meant merely to indicate that it 837 was printed on the usual positive film, which is of the usual character. It is all of the same character. Of course, it has two faces, one of which is coated with the emulsion and the other is the base. I don't—

XQ699. You defined ''character of film'' very definitely in your testimony, did you not? A. Character of a photographic material.

XQ700. Character of film you have defined pretty definitely, have you not, in your testimony? A. I have defined the character, the photographic characteristics of the material, yes.

838 *Lloyd A. Jones--For Defendant—Cross.*

XQ701. As I remember it, it was one which had substantially the same grain structure or granular structure? A. (No answer.)

XQ702. And you had reference to the emulsion, did you or of the film stock itself? A. To the emulsion.

XQ703. To the emulsion? A. To the photographic emulsion.

XQ704. And when you have been referring to positive film of the same character heretofore in
839 the patent in suit and defendant's process, you were referring to film having an emulsion of the same character, were you not? A. That is correct.

XQ705. And you use, or so it happens, that those same terms are used in these questions where you knew that the sound stylus record was embossed on the rear of the positive sound stock where there was no emulsion, is that right? A. Perfectly true. I did not intend to convey any meaning—the impression that the sound record was embossed in the emulsion.

840 XQ706. At page 316, Q172, still referring to this patent, this Pedersen patent, you were asked, "Will you tell me whether or not, the cellulose base of positive film is a suitable medium on which to print a sound record of the phonographic type, such as Pedersen," and you answered, "Yes, it is a very suitable record." A. That should be material. That is an error. It should be material.

XQ707. "—very suitable material for use in the embossing type of printing which is required in making this type of phonographic record." Surely, you did not intend to suggest to the Court that a satisfactory stylus type of record of this

type could be embossed in a motion picture film stock, ordinary stock used for motion picture films? A. In the material made—the base on which the emulsion was coated?

XQ708. No, on the very film stock carrying the picture? A. No, that was never intended.

XQ708a. You never intended to suggest that this was an operating proposition? A. Not for embossing in the emulsion, the photographic material.

XQ709. Or on the back? A. Yes, it can be 842 embossed on the back of ordinary photographic material.

XQ710. It can be? A. And that the base on which the emulsion is coated is a suitable material for such an embossing operation.

XQ711. Having reference to the thickness of the motion picture stock, you can satisfactorily emboss the wavy stylus record on the back of that to get satisfactory results? A. I say you can get very satisfactory results.

XQ712. Without putting anything else on the cellulose? A. Yes.

XQ713. Did you, on this point, did you know 843 that on page 2 of the Pedersen specification, commencing at line 32, he states:

"If the celluloid of the positive film be found unsuitable for the impressing of the sound wave line it may be necessary to make the impression on some other suitable substance."

Did you notice that? Mr. Pedersen had some doubt as to whether that could be satisfactorily done, did he not? A. Yes, he said "if".

XQ714. Referring to the Greenfelder patent, on page 316, at Q175, referring to the recording of the Greenfelder sound marks, you answered:

844 *Lloyd A. Jones—For Defendant—Cross.*

"Greenfelder makes a sound record by photographing sound marks on a negative film. These marks are made by the actuation electromagnetically of diaphragms which cause the light to act upon the film from time to time."

Now, in sound recording, in the proper sense of the word, as the defendant and the patentees propose to record, sound records, in a broad sense, are made by actuating electromagnetically diaphragms which cause the light to act on the
845 film? A. Yes, broadly speaking.

XQ715. Where do you find any justification for using that expression with respect to Greenfelder? I refer you to Fig. 7 of Greenfelder, which discloses, as I understand it, the manner in which he proposes to record his sound.

A. The answer to the question as I gave it in direct testimony was inadvertently incorrect. I should have stated, instead of "electromagnetically", "mechanically operated diaphragm."

XQ717. I see. And where do you get any justification for the word "diaphragm," even? A.
846 Well, the element 25, 24, and 25, as shown acts as a diaphragm which permits the light to pass through to the camera or not, whether it is in the upper position or lower position.

XQ718. Will you define the word "diaphragm"? A. I think broadly speaking it is a shutter, something for occluding the light rays, either partially or wholly.

XQ718. And the word "shutter" or light opening would be decidedly a more appropriate expression, would it not, with respect to Greensfelder? A. I have no objection to the term "shutter". In my own mind the word "diaphragm" is applicable to the form as shown.

XQ720. If you were writing a technical paper, would you use the word "diaphragm" in describing that operation of Greensfelder? A. Yes, I think I might. It is perfectly good phraseology in describing that sort of structure.

XQ721. Referring to the facts in regard to Greensfelder's proposed recording, the fact is that he proposes to connect up by a series of levers with his piano key, or each of his piano keys, let us take one, with his piano key, an upright arm with a slot cut in it, and he proposes 848
a constantly burning light projecting its rays at that slot or at the position that slot may occur, and then when the piano key 17 is struck, the arm or slab moves up and brings a slot or opening in that arm or slot before the light, so the light passes through the opening, and that light is projected onto the film: is that right? A. That is correct.

XQ722. And the type of record that Greensfelder there made, the type of shape of image that will be recorded will be in accordance with the mechanical outline of the shape of that slot? 849
A. Yes, that is correct.

XQ723. If that slot were an oval slot, you would get an oval image on your film: right? A. Yes, that is correct.

XQ724. And if it were a rectangular opening, you would get a rectangular image on your film? A. That is correct.

XQ. And there is no relation, is there, between the character or shape of that image on the film, with respect to the sound that Greensfelder hopes to be able to control through means of photographing that image on the screen, is there? A. No, that is perfectly true.

850 *Lloyd A. Jones—For Defendant—Cross.*

XQ726. All he wants to do is to have some opening, immaterial what the shape is, through which light will pass and register on a film: right? A. Yes.

XQ727. In Q176, commencing on page 316, you were asked: "The picture record is taken on one negative, is it not? A. The pictures are recorder on one strip of negative film, and the sound records are recorded on another length of negative film separately."

851 Now, with regard to the term "sound records", you mean the sound marks, as Greensfelder calls it? A. Yes, I mean the sound marks as disclosed in the patent.

XQ728, Arbitrary sound marks, having no relation to the variations of sound vibrations which we get in recording sound? A. They are arbitrary as far as shape. Of course they have a certain definite position on the film, which determines what they will reproduce when they go through the reproducer.

XQ729. And except for the matter of position,
852 they bear no relation to the original sound which is produced to accompany the picture? A. That is correct.

XQ730. Greensfelder proposes to reproduce his sound, his original sound, by setting up on the stage where the picture is projected a similar piano, if the sound is taken by playing a piano, and then, through a selenium cell mechanism arrangement, have light rays fall upon the selenium cell and create a current in a system of circuits which will cause a magnet to operate the corresponding key of a piano if and when that corresponding piano is put in position, is that right? A. Yes, that is right.

XQ731. And if you happen to put a bass drum on the stage and have that magnet operate the drum stick, you would get a drum beat instead of a piano key? A. That is perfectly true. If you do not assemble the equipment in the proper position, you will naturally get errors.

XQ732. But in true sound recording, that condition or that opportunity of mishap does not come in. When you properly take sound records such as the defendant and the plaintiff contemplate, so that when you put your light through it, 854
by reason of the character of the sound record, you get the faithful reproduction of the original sound? A. That is the case.

XQ733. With regard to this same point of the character of Greensfelder's photographed sound marks, you were asked at page 320, Q186:

"Let me ask you, Mr. Jones, could any advantage be obtained by developing the sound and picture records of the Greensfelder patent differently? A. Yes, there could be certain advantages obtained by doing that. The sound marks, of course, should be developed to a high 855
density, but at the same time not sufficiently high to cause any undue spreading of the image. If an exposed negative is forced in developing, fine lines tend to become wider. It might be very undesirable in the case of a record of this kind, so the sound negative record should have a proper development treatment."

Now, Mr. Jones, you realize that Greensfelder, in Greensfelder we are not dealing with the fine gradations of 70 or 80 lines to a fraction of an inch. We are dealing with pretty coarse lines, are we not? A. Relatively coarse. If he sets up, for instance, 88 operating mechanisms to record

on a single strip of standard film, there would be at least 88 and probably a few more in a distance of an inch across the film.

XQ734. 88 on the same horizontal line across the film? A. Yes, that would be necessary in his structure if he were going to operate a piano.

XQ735. Now, those are pretty coarse lines, as a matter of fact, are they not? A. They are relatively coarse as compared with a finer structure.

XQ736. And is it not a fact, Mr. Jones, that all
857 that Greensfelder cares about is to have a sufficient translucent opening on his film to let sufficient light rays through to activate the selenium cell? A. That is perfectly true, but he must not get through one particular opening enough light rays to actuate the next adjacent instrument, instrumentality, key, note of the piano.

XQ737. How wide would his slot have to be to do that? A. Well,—

XQ738. He proposes to use a separate selenium cell for each key? A. Yes,—

XQ379. Or a selenium cell made up into divi-
858 sions of compartments, one for each key, is that right? A. Yes, that is true.

XQ740. Now, the only thing that seems to be worrying you is that the slot must not be so wide that the light ray passing through the film would not disperse and take in two of those cells? A. That is correct.

XQ741. Now, it would have to be a pretty wide slot to do that, would it not? A. Well, with these lines disposed at 88 or more, say 100 per inch, a relatively small spread—for instance, if the line, instead of being .01 of an inch wide was .02 of an inch wide, it would naturally spread over two of these selenium cell operating devices.

XQ742. How is Greensfelder going to operate 88 selenium cells or 88 subdivisions of a selenium cell through light passing through 88 lines on this film in a practical sense? A. Well, each selenium cell receives the light passing through one of the lines or slots which he is forming on his positive film.

XQ743. Well, perhaps you can tell us how he is going to arrange those selenium cells so that is possible. A. Well, he shows or suggests a structure in which the selenium cells are arranged 860 side by side.

XQ744. Yes, he has a diagrammatic showing here, but that does not tell us how you are going to do it as a practical matter. Have you any suggestion as to how that thing could be done as a practical matter? A. Well, it seems to me it is perfectly obvious that if you have on your film, on the positive film, we will say, one line for each key of the piano, that space is set aside for each key. Now, if that becomes transparent, the light passes through that and falls onto a corresponding selenium cell. When that is energized, it then 861 operates the appropriate or corresponding key on the piano.

XQ745. What I am trying to get at is how you can physically arrange these selenium cells so that you can take light rays passing through a space that is occupied by these lines and so divert those respective and separate—those respective light rays, that they can operate separately and independently in its selenium cell, select them? A. Of course, the selenium cells are not arranged directly in front of the film, that is, close to the film. They are arranged at some

distance from it and an image of this film is projected onto the selenium cell assembly.

XQ746. He proposes to select certain of the rays which are projected from his motion picture projector through his motion picture to operate the selenium cell? A. Yes.

XQ747. Or certain of the rays that are projected through these slots—which? A. Well, the film is run through a projecting machine, that is, when you are reproducing the record, the sound
863 marks and the picture are on the same positive film. They are being carried through a projector, and that same projector projects light through these various translucent areas onto the selenium cell assembly which is at some distance and in the proper position relative to the projector.

XQ748. And he depends then upon the light rays which are coming from his motion picture projection machine, but such of those light rays as are passing through these slots or so-called sound marks, transparent sound marks, on that film? A. Yes.

864 XQ749. And then that same beam of light, although the part that comes through the sound marks is projected toward the screen and has got to set up his selenium cells, 88 of them somewhere in the theatre, in that beam of light between the machine and the screen on the stage in order to intercept those lines of light to operate these mechanisms here, to operate his instruments? A. Yes, that is correct.

XQ750. Now, Mr. Jones, reverting to the undue spread of images, tell us what you refer to by development to a high density. What is the extent, relative spread? You have got a line now on the film, an opening, a transparent opening. That

is what you want, a transparent window for the light to go through, and the only necessity in Greensfelder's operation is to get enough light through there to operate the cells, and, as you say, to be able to get 88 spaces.

Now, you say that if you have too highly developed a film, you get a spread, and hence a broadening of these lines, and I ask you how high have you got to develop the film, how much of a forced development have you got to get in order to broaden these lines by that forced development 866
so that you are going to get into any trouble? A. The forced development that I spoke of was in connection with developing the negative record—

XQ751. I so understood. A. —and the amount of spread that you get in any case will depend upon the characteristic of the photographic material. It will depend upon that characteristic of the material which we know and refer to as the astrogamma, which is the growth of an image laterally—

XQ752. I do not mean to interrupt you, but I 867
think you are going into unnecessary detail in your answer. You have said, I believe, that Greensfelder used ordinary negative stock? A. Correct.

XQ753. Let us try not to get away into too technical things. With this ordinary negative stock, what is the relative increase in width of these lines he proposes to use, or what would be the relative increase of width resulting from this so-called forced development? A. I think it would be very easy, in the case of forced development, to double the width of the lines.

XQ754. Well, there is ample room on the film

for doubling the width of the lines, with 88 marks as a maximum, isn't there? A. It depends entirely upon the mechanical and physical dimensions of your arrangement.

XQ755. Take a line that is sufficient to get light through and no more— A. Well, if the recording arrangement were set up, let us say, to record 88 parallel marks on the film, and the free space available is only one inch, the space available for that would be approximately 1/100 of an inch,
869 or slightly more. Now, with that—

XQ756. 20 per cent. more, wouldn't it? A. Well, about 12 per cent. more, we will say.

XQ757. I thought you said 80. A. Certainly, in making such a set-up as this, one would wish to use as wide a line as possible, so that through the corresponding transparent space—

XQ758. I beg your pardon, but I asked you to assume he had a line only wide enough to get light through to the selenium cell. I do not think there is any need to get it wider than that? A. That line may be less than 1/100 of an inch, and
870 you will have to double that line—

XQ759. Mr. Jones, certainly selenium sells respond to light through lines less than that width, don't they? A. It depends entirely upon the intensity of the light which would be concentrated thereon.

XQ760. Don't they respond to the fine lines in the ordinary standard sound records of today? A. That is perfectly true.

XQ761. How many have you got to an inch? A. About 100.

XQ762. What? A. Well, that is a sound record?

XQ763. Yes. A. It depends upon the frequency.

XQ764. Take an average, do not let us quibble about it. A. Taking an average of frequency, about—

XQ765. Roughly speaking, I do not want to tie you down. We have got plently of latitude. A. Perhaps 1,000 per inch.

XQ766. That is good enough for me, 1,000 per inch, 1,000 lines to the inch, lines that wide, openings that wide for the light, will cause satisfactory response on the selenium cell? A. It depends entirely upon the amount, the intensity, 872
the light flux, which is concentrated upon those lines.

XQ767. Mr. Jones, do not let us get into those high details, let us get down to bed rock in a very simple way. It is a fact those selenium cells do respond to light passing through on what I term a standard sound record? A. Correct, yes, that is correct.

XQ768. And you have admitted to an average of 1,000 to an inch; therefore, it seems to me that you must admit that wou will get enough light through an opening narrow enough to occupy 873
1/1000 of an inch; is that so? A. I think it can be done.

XQ769. Isn't it so in practice? A. Again in the actual carrying out of this idea—

XQ771. I am talking about the standard practice today, 1/1000 of an inch is enough to get light through, to operate a selenium cell, isn't it? A. Yes.

XQ772. All right. Then, is there any necessity for having more than two thousandths of an inch, let us say, I will let you double that, 2/1000 of an inch, to operate a selenium cell by Greensfelder? A. Again I do not feel that I can answer

that question unqualifiedly. It depends upon the structure—It would depend upon the structure which is set up for the operation.

XQ774. Let us go back to the Greensfelder. You have got a ratio now of 88 to 1000, 88 to 1000. Now, do you still maintain that with lines of that additional width in Greensfelder over the common practice in sound track records, that your so-called forced development would create any distortion in Greensfelder's operation? A. Yes,
875 I do feel it is entirely possible that forced development will create sufficient distortion of a record of that type to be troublesome in practice.

XQ775. As a matter of fact, Mr. Jones, as a matter of practice, if you have 88 lines to the inch, as in Greensfelder's sound marked proposition here, and a picture record, you would expect that those two records could be developed at the same time on the same bath without difficulty, wouldn't you? Having the pictures developed appropriately? You would expect that in that case the sound records would not be hurt? A. If the pictures were all correctly exposed, yes.

XQ776. Well, exposed within the region of practice? A. Within the region of practice which was customary at the time of this patent, it was necessary to subject different takes to considerable variation developments.

XQ777. Well, now will you give us in figures, what the broadening would be for your forced development? A. I said a moment ago that it would be very easy to broaden the line, to double its true width, by that I mean the true width of the exposed area, by forced development.

XQ778. And that would be the maximum broadening effect? A. No, I do not think that would be the maximum, no.

XQ779. That would be about what you would expect in practice you would have to do or might be done? A. Yes, I think that is a fair approximation of what might happen.

XQ780. That would give you twice 88, would it not, as against 1000 which practice shows is entirely satisfactory; is that right? A. Yes.

XQ781. Now, with regards Kindermann British patent, you testified in answer to Q189, "this patent discloses the simultaneous recording of pictures and sound on a photographic material," and then you went on and said, "to the edge of 878
which there was attached a thin metal strip." You did not mean that the patent disclosed the simultaneous recording of the picture and sound on the photographic film, did you? A. No, on the combined structure.

XQ782. You were asked at Q190, "Does Kindermann combine the sound record and picture record into separate sound and picture records? A. Yes, as I have stated, after exposure, the part of the record carrying the sound—the part of the film carrying the sound was separated from that carrying pictures." 879

What do you mean by using the words "after exposure" with respect to Kindermann, and the term "carrying the sound"? A. I mean after the exposure of the film to the picture record and the recording of the sound on the metallic strip which was attached to the picture record during the exposing operation.

XQ783. You said "Yes, as I have stated, after exposure, the part of the record carrying the sound," and so forth. What you meant was after exposure of the picture record? A. After exposure of the picture record, the part of the structure carrying the sound is separated.

880 *Lloyd A. Jones—For Defendant—Cross.*

XQ784. It is a fact, is it not, that there is no exposure in this patent of the sound record at all? A. That is true; the sound is recorded in a phonographic manner.

XQ785. And the next question you were asked with regard to the Kindermann patent: "Then are the two negatives developed separately?" and you answered, "They were developed separately." You did not mean to suggest by that answer that there was any photographic development of
881 the sound record, did you? A. No, that is a photo-mechanical treatment.

XQ786. What is the photo part of the treatment that you say is photo-mechanical? A. Well, it is a treatment, an etching treatment that is used, a similar treatment which is used—I think that should not be called a photo-mechanical treatment, it should be an etching treatment, that is the correct terminology there.

XQ787. Then there is nothing "photo" about Kindermann? A. There is nothing photographic about his sound record, his phonographic record.

882 XQ788. Is this a fair statement as to what Kindermann discloses: He records by having a flexible zinc strip coated with wax, and the stylus operating thereon forms a sound record such as a gramophone record, this being done while the pictures are being taken. To reproduce from this, a flexible celluloid strip in which this sound groove is formed by etching, as you say, is made, and then this strip is fastened to the picture film and the sound is reproduced again by a stylus. Is that a fair statement of Kindermann's patent? A. Yes.

XQ789. It is nothing at all except the old gramophone stylus sinuous path upon one strip which

is secured to the picture film? A. That is correct.

XQ790. With regard to the Rosenberg patent, at Q200 Mr. Ashton has asked us to change your answer in that, so I will read it as changed. "Q200. Suppose they were recorded on separate films. What does he do with those two films after he has developed them?" Then the answer as corrected: "The patent provides for the printing of the records onto separate films." The answer originally read that the patent provided for the 884
printing of the records on the same or onto separate films. Now the corrected answer is the one that you accept? A. That is right; it was my mistake.

XQ791. Now, to summarize this Rosenberg patent, as I understand it, he shows a picture record and a sound record, and he proposes taking them separately, keeping them separate, or he proposes as the other method taking them all on one film together and keeping them on one film, is that all? A. That is correct.

XQ792. Nothing else in that patent? A. There 885
are many other things but—

XQ793. I mean in regard to the process. A. As far as the photographic process is concerned.

XQ794. Mr. Jones, with respect to the French patent to Vogt-Massolle, 532,750, of course you understand that as an expert you are concerned with the disclosures here, not with what this patent may claim?

XQ795. The matter of the effect of this patent, for the purpose for which it is up, is a legal point for the Court. I am directing my question to you as to the disclosure in this patent, and not to any question as to what the patent claims

to patent as an invention or seeks to patent as an invention.

XQ796. You understand the difference, do you not? A. Yes.

XQ797. Now, is it your contention that this French patent discloses a process for producing the sound and picture records on a positive film wherein the sound and picture records are photographed simultaneously? A. Yes, it seems to me the disclosure so reads. It certainly is directed
887 to the making of sound films, and in the last paragraph, on page 2, it says definitely that during the motion picture recording of the original plastic scene one can couple in a positive manner to the motion picture film driving mechanism the film winding drum of a separate and distinct accoustograph which indicates they are recording pictures and sound simultaneously.

XQ798. And on separate films; you so testified yesterday, I think? A. Yes.

XQ799. Does the patent also disclose the idea of separately developing those two negatives, the
888 sound and picture negatives? A. Yes, I think it does.

XQ800. You haven't much doubt about it, have you? A. No, I have no doubt about it, because it refers, it goes on to refer to the case where sound is recorded at a subsequent time, and then refers, speaking of these two methods—

XQ801. I think you had better stick to the method where they are simultaneously taken on separate films. In that case does it disclose the separate development? A. Well, I do not see that we can divorce the two because it states very distinctly in the third paragraph on page 3, in referring to both methods of recording, it says

in both cases the subsequent processes, I am not quoting, are the same for the two. Now certainly in one case the development must be separate.

XQ802. In the case where they were taken at different times? A. Yes; they must have been separated because the sound is recorded while the original thing is being projected. It must have been developed and printed so it could be projected. And if the subsequent treatment is the same in the two cases, it implies separate development in both cases. 890

XQ803. Will you read the full statement there about separate treatment? A. The patent states in the third paragraph, on page 3, that: "The subsequent treatment of the picture films, after exposure, is, in both cases, the same as far as the printing process, reproduction process, etc., are concerned."

XQ804. Then you desire to answer my other question "Yes", that it does disclose a separate development? A. Yes.

XQ805. With the separate negative. Then does the patent further disclose that having taken 891 the sound record and the picture record simultaneously on separate films, and then separately developing them, does it disclose the further step of printing them on a common positive film so that they are longitudinally arranged side by side on one face of the film? A. The patent does not go into that detail, but it states very definitely that the two records can be copied on the very same film band.

XQ806. You assume that when they are copied on the very same film band where they have been taken on separate negatives and separately developed and printed on the same film band, they

would naturally be printed in that position, that is, longitudinally side by side on the same face of the same film band? A. Yes.

XQ807. Mr. Jones, you recently had an interview with Mr. Bullis, the patentee of the patent we have been talking about here? A. I have seen Mr. Bullis.

XQ808. Why, didn't you and an R. C. A. representative and a representative of Western Electric have an interview with him not long ago?
893 A. Yes.

XQ809. You talked to him about this patent? A. Yes.

XQ810. Did you get any comfort out of this interview with regard to Bullis' disclosures? A. I personally did not discuss the matter with Mr. Bullis but very little; I was only present at part—

XQ811. There was such an interview at which you were present?A. Yes, partially.

XQ812. Now, Mr. Jones, in regard to these pictures that you have put in evidence here, De-
894 fendant's Exhibit E, which were made somehow by somebody up at your plant, according to your testimony, as I understand your testimony, after they were made, after you have assumed they were made, one was made with what was supposed to be the defendant's positive developer and the other with what was supposed to be the defendant's negative developer, and in developing each different times of development were given, is that correct? A. That is correct; the exposures were developed to the same contrast.

XQ813. Now, was it your idea in putting these pictures in, developed as you have testified, to rebut or contradict Mr. Hoffmann's testimony

about his experiments? A. I had no knowledge of Mr. Hoffmann's testimony at the time we made these pictures. These pictures were made specifically to show that the two developers give the same character of development.

XQ814. And you have defined character of development as development carried out by any developer where the activating ingredients or active ingredients are the same, even if different in quantity? A. That is not the whole definition of the same character of development. I have 896 defined the same character of development as this development, treatments which gives identical results with respect to the grain size, grain structure, color of the image and shape of the characteristic curve.

XQ815. Now, you have the negative present from which these two pictures of Exhibit E were made? The negatives seem to have a decided bluish or purplish cast to me as a layman. Will you tell me why that is (handing to witness)? A. I fail to see the bluishness. They seem of normal color.

XQ816. The negatives look to you to be en- 897 tirely normal? I am not saying they are not. I am just asking you for information. A. Yes, they seem to me to be of normal color so far as I can see under these conditions.

XQ817. Is there any reason, Mr. Jones, why the areas of these negatives of Exhibit E, where there is no film, such as where the sprocket holes are, or on no emulsion such as where the sprocket holes are, should have any dark or different tone from these strips of film, negative film which you used in connection with getting data for your Exhibit E? A. Those negatives may have been

made, as I think they are, on the emulsion which is coated on what we call a gray back, which is merely one of our methods of making this material. The film base itself has a color, but the emulsion is the same in the two cases.

XQ818. Does that gray film back have anything to do with making these two pictures look as dark as they do? A. Yes, of course it would.

XQ819. It results in having the pictures of Exhibit E unduly dark, does it not? A. Well, it
899 adds a perfectly uniform density—

XQ820. No, just answer my question. It does result in making these pictures quite dark? A. Yes—no, it does not have anything to do with making those pictures look dark.

XQ821. What pictures are you talking about? A. The negatives, themselves.

XQ822. These pictures are printed from those negatives? A. Quite.

XQ823. And they are dark, are they not? A. Well, they are relatively dark prints, but—

XQ824. The character of these prints, being as
900 dark as they are, both in the black and white, tends to minimize contrast, does it not? A. No, it does not.

XQ825. Does it minimize your power to see the contrast with your eye? A. The particular composition is responsible for this density distribution—

XQ826. Why was that composition chosen for this test? A. It was chosen because we considered the negative from which it was made to be a good quality negative to show a good photographic quality.

XQ827. Certainly, you have a lot of nice negatives, of good photographic quality, in the East-

man plant, that have not got that original difficulty in the subject, have you not? A. Possibly. I did not choose this particular negative myself.

Mr. Neave: What difficulty are your referring to?

Mr. Ward: I refer to the difficulty, Mr. Neave, in the contrast of the pictures.

XQ828. Now, if the subject had been a lighter one, do you not think that we could get a better idea of the true contrast or relative contrasts? 902
A. Why, I don't know. Possibly, as far as I am concerned, these are sufficiently of a satisfactory quality to show me that the characteristics of those pictures—

Mr. Ward: I move to strike that out. I asked nothing about characteristics.

The Court: All right, strike it out. Go ahead with your questions.

XQ829. As a matter of fact, taking these pictures as they are, do you not detect a difference 903
in contrast between the two? A. There may be a very slight difference of contrast. They, to me, however, look quite closely matched.

Mr. Ward: That is all, except that I would like to have the negatives in evidence.

Mr. Neave: I offer in evidence the negatives, from which Defendant's Exhibit E were taken.

Received in evidence and marked Defendant's Exhibit K.)

904 *Lloyd A. Jones—For Defendant—Re-direct.*

Re-direct examination by Mr. Neaves:

RDQ830. Still referring to this photograph, Defendant's Exhibit E, that is a print, as I understand it, enlarged print from the negative that has just been put in evidence? A. Correct.

RDQ831. And depending upon how you print that, you will get a light print or a dark print, won't you? A. Yes, that is true.

RDQ832. That is, the lightness or the darkness of the print, does not show the lightness or
905 the darkness in the negative? Not at all.

RDQ833. And is this photograph, Defendant's Exhibit E, the prints, are they fair, good prints, from those negatives? A. They are fair prints. I think they are, perhaps, on the dark side.

RDQ834. You could have printed them lighter, and if anyone wants to print them lighter, they can print them lighter from these negatives here? A. Yes, that is perfectly true.

RDQ835. In the early part of Mr. Ward's cross examination, he was asking you about what there was in the patent in suit that showed that
906 the films there depicted were or were not of standard width, and I don't remember that you referred to any particular part of the specification. At line 57 of the specification, on page 1, I find this:

> "If for the record two separate films with standard perforations are used two negatives are produced as shown in Fig. 1."

What do you understand that means as to standard width of film? A. I understand that to refer to the standard width of perforation

of film which was in use commercially at that time for silent pictures, that is, the normal 35 millimeter film.

RDQ836. So that irrespective of whether the drawings are schematic or whether they are drawn to scale, do I understand that that means that the two films shown in Fig. 1 are each of them of standard width? A. Yes, it certainly does.

RDQ837. And then when they are combined in Fig. 2, they are not of standard width, is that 908
it? A. No, they could not be.

RDQ838. It appears from your testimony that the character of development of the defendant's sound and picture negatives is the same, but that different times of development are used. Will you state again why the different times of development are used as a matter of practice? A. The different times of development are used so that the desired contrast will be obtained for the two cases. The time is made short in the case of the sound negative so that the film may be run through the machine at a higher velocity. 909
The concentration of the developer is adjusted so that that time can be made short and thus give a larger output of work.

RDQ839. As a matter of practice, what developer is used for developing the positive print or the positive film?

Mr. Ward: Do you mean by the defendant?

Mr. Neave: By the defendant or by others that you know of.

Mr. Ward: He said he did not know much about defendant's.

910 *Lloyd A. Jones—For Defendant—Re-direct.*

RDQ. (Continued.) I don't want you to give the ingredients. Is it the same developer that you used to develop the positive sound negative, positive emulsion of the sound negative? A. No, it is a different developer, it is a developer of the elon hydroquinone type, and one that is adapted to give the desired contrast in the combined sound and picture print.

RDQ840. You have said that you have specialized in the past in the principles of tone
911 reproduction. Were those principles well-known before 1921? A. Yes, very well-known.

RDQ841. Do they apply equally to picture and sound records? A. Yes, they do.

RDQ842. State whether or not those known principles included the relation of density and exposure, what has been referred to as gamma, photographing on the toe of the curve and on the straight line portion. A. Yes, all of those relationships were known. As a matter of fact, the development of the tone reproduction theory dates from the work of Herbert Riffield about
912 1890, and they and Lord Rayleigh and other workers, notably Renwick and Porter and Slade, in England, developed the theory of tone reproduction very completely, which shows the relation between the density characteristics, contrast characteristics of the negative and positive, that are required to give a precise reproduction of the brightness in the object. The question of using the under-exposure portion of the characteristic curve of the negative and positive materials was considered at great length by Renwick in a series of papers, and he worked that theory out very completely.

RDQ843. Will you state again why it is that

you are testifying here, that is, what interest has Eastman in any of these things? A. Why, I am testifying here, as I stated before, because I was so directed by my superior, and the Kodak Company, of course, has had very friendly relations with the Bell Telephone Laboratories, the Western Electric people. As a matter of fact, they endeavor always to give any assistance they can to anyone using their materials—

RDQ844. That is, Eastman does? A. Yes. I am afraid I cannot speak from the standpoint of 914
the management of the company as to just why—

RDQ845. Do you know whether the Eastman Company gave any service in New York to Mr. Hoffman, who has testified here?

Mr. Ward: I object to that, your Honor, for the same reason that Mr. Neave objected to mine. He cannot tell what the company did unless he had p e r s o n a l knowledge.

RDQ846. Do you know of your own knowledge 915
whether they gave personal assistance to Mr. Hoffman? A. Yes, I do.

RDQ847. And do you know of your own knowledge whether they give assistance to others with reference to emulsions and photographic films and how to use them? A. Yes, I do.

Mr. Neave: I offer in evidence a photostatic copy of the German patent 368,383, to Vogt, Massolle and Engl.

(Marked Defendant's Exhibit L in evidence.)

Mr. Neave: I offer in evidence certified

copy aand translation of the history of the application for the German patent which resulted in the patent last mentioned.

(Marked Defendant's Exhibit M in evidence.)

Mr. Neave: I offer in evidence the following papers as one document, these being certified and sealed together by the British Patent Office. They relate to the British patent 178,442, corresponding to the patent here in suit, the papers being:

917 First, the British application as open to public inspection in the British Patent Office on April 15, 1922, four days after it was filed; second, the corresponding German application as filed in Germany, and a translation; third, the patent as issued; fourth, an assignment from the inventors, dated August 16, 1924, to Tri-Ergon, A. G., the Swiss Company.

Mr. Ward: I object to the introduction of the British patent and File Wrapper as

918 irrelevant and immaterial. It has not anything to do with this suit. What happened in the British Patent Office is wholly immaterial and irrelevant. There is no priority based on it. It is not prior art and it has got nothing to do with this case. Mr. Neave simply wants to show some File Wrapper argument of some British attorney in the prosecution of that case.

Mr. Neave: It is not argument. It is what was done.

Mr. Ward: It has nothing to do with this case.

 919

The Court: I do not believe that it would have the same weight as the File Wrapper has here, but nevertheless I will take it, and you can move to strike it out.

Mr. Neave: It shows what was done, and not the arguments, and we shall call your attention to some decisions saying that it is pertinent to show what the inventors did.

The Court: I will take it.

(Marked Defendant's Exhibit N in evidence.) 920

EDWARD C. WENTE, called as a witness on behalf of the defendant, having been duly sworn, testified as follows:

Direct Examination by Mr. Neave:

I live in the Borough of Manhattan and am an accoustical research engineer for the Bell 921
Laboratories which were established in 1925, connected with the American Telephone & Telegraph and Western Electric. I have been in research work for the Bell system for 16 years.

I was a student at the University of Michigan, from which I graduated with the A. B. degree in 1911.

In 1911 and 1912 I was at Lake Forest College, instructor in physics and mathematics, and from 1912 to 1914, I was a student at the Electrical Engineering Department of the Massachusetts Institute of Technology, from where I was grad-

922 *Edward C. Wente—For Defendant—Direct.*

nated in 1914 with the degree of Bachelor of Science in electrical engineering.

From 1916 to 1918, I was a student in physics and mathematics at Yale University, and was graduated with the degree of Doctor of Philosophy in 1918.

In that interval of two years between the time when I went to Massachusetts Institute of Technology and the time I went to Yale, I was employed in the Research Department of the West-
923 ern Electric Company. At that time I was engaged in the study and development of sound-measuring devices and other electrical accoustical instruments such as the condenser microphone and the thermaphone. A thermaphone is a device which is used—it is a type of telephone receiver, but it is used principally for the calibration or the accurate determination of the performance of microphones. When I left Yale in 1918, I then returned to the Western Electric Company. And I remained with the Research Department of that company until the Bell Lab-
924 oratories were established, and ever since then I have been with the Research Department of the Bell Laboratories. The Telephone Company has been dealing with problems relating to sound for a great many years; I should say from almost the very beginning.

Tracing the various aspects of the development work of the Telephone Company which resulted in the introduction of the Western Electric talking movie picture sound-recording and reproducing systems—The problems involved in the development of the recording and reproducing system of talking pictures are in many re-

925 spects identical with those that are met with in the development of a high quality long distance telephone system. In either case, we require a microphone, which is a device for translating sound into a corresponding electric current, an amplifier or device, which can transform the relatively weak currents, such as are delivered by a microphone, into corresponding currents of very high strength, and thirdly, some type of device, such as a telephone receiver, is required for translating the electrical current into cor- 926 responding sound.

In the talking picture, it is absolutely important that each one of those devices shall perform its function with practically no distortion. By "no distortion", I might say, of a translating device, we mean that if we have at the same time impressed on the input of the device a series of harmonic oscillations, then there shall be generated on the output a corresponding series of harmonic oscillations, and with no additional ones, and that the relative amplitude of these harmonic oscillations shall be the same on 927 the input as on the output.

Now, the telephone company felt the need, at quite an early date, for some kind of amplifier, for in this country, in contrast with Europe, important cities are separated many thousands of miles, and an amplifier is needed in order to connect these cities. So a number of amplifiers were developed for this purpose.

In 1912, they began the study of the audion, in order to develop it into an amplifier for this telephone service. By January, 1915, these amplifiers, together with associated circuits, had

been developed to the point whereby their use in trans-continental telephone service, that is, between New York and San Francisco, was established on a commercial basis.

These amplifiers have been the subject of practically continuous study of the telephone engineers since that date, and, of course, have found very many applications.

For instance, in the public address system which was brought out by the Western Electric
929 Company to enable the speaker to address a much larger audience than he would be able to do with the unaided voice, and such amplifiers were used in the public address system in 1921, at the inauguration of President Harding, when a gathering of some 125,000 people were able to listen to the inaugural ceremonies around the Capitol steps. And these amplifiers, this type of amplifier, so-called vacuum tube amplifiers, are used today, as far as I know, exclusively in in the recording and the reproducing of sound for talking pictures in theatres.

930 The telephone company engineers have also been interested for a long time in the development and improvement of microphones from the standpoint of efficiency, quality and reliability, and as early as 1912 or 1913, an improved form of microphone was used with a Duddell oscillograph in connection for making sound records.

With the advent of amplifiers, the development of high quality microphones received a fresh impetus because it now was no longer necessary that a microphone should have high efficiency, but efficiency could be sacrificed to the interest of good quality. In 1914, when I

first came with the Western Electric Company in their research department, I was soon thereafter given the problem, and started work on the development of a microphone of the very highest quality, because the company was at that time also becoming interested in the transmission of music, where a much wider frequency range has to be transmitted, and also a much greater loudness range than for speech.

But there was one difficulty in our efforts to build such a microphone, to develop such a 932
microphone: There was at that time no means available for determining the performance of such microphones, and it was for that reason that I, in colloboration with Dr. Arnold and Dr. Crandall, developed this thermaphone, which I have already mentioned the function.

Then with this thermaphone available, I devised and developed the condenser microphone. 1916 is when we had completed the construction of a model which had practically uniform response over the whole accoustic range.

In the development of these condenser micro- 933
phones, the work or further development work was interrupted by the World War, but in 1919, I again came back to the Western Electric Company—this was after the war, a year after I had gotten back, and started further work on these microphones, and by 1923, I had increased their efficiency by a factor of about 100 times. This type of microphone is used today in practically, or until very recently, at any rate, in practically all the sound recording work, both for phonographs and for talking pictures, it was used practically exclusively.

934 *Edward C. Wente—For Defendant—Direct.*

I have already mentioned that it was in 1913, the engineers at the laboratories had made sound records by means of a microphone and an oscillograph. These records are of the so-called variable width or variable area type, records that you obtained with the Duddell oscillograph.

But in 1916, records were also made by the variable density method, but the quality was not sufficiently good, so that we felt that it had no particular commercial value at that time,
935 and we went into further development work on another apparatus.

But in 1920, I again took up the study of recording the sound on film by the variable density method. I, at that time, felt it was very important that any device which would be used for recording sound in this way should expose the film correctly, that is, should give it the correct exposure. After considering various devices which had previously been proposed, I thought that the method that was being used at that time for the transmission of speech, by a light beam
936 by Professor Rankine in England, appeared to be the most suitable device for obtaining the correct exposure.

I therefore constructed an instrument of this sort and made sound records on motion picture film and reproduced them. The quality compared very favorably with what we were getting on commercial phonographs, but still it was not good enough to satisfy us, and after extensive test we came to the conclusion that the exposure that we were able to get with this system was not sufficient to give us the correct exposure.

It was then that I devised the so-called light

valve, which we found gave us plenty of exposure, so that even with the higher speeds that are being used now, the exposure was sufficient.

And this type of light valve for recording has been used in the Western Electric sound recording system, as it was adopted by the majority of the producers.

I have described the course of my work up to and including 1922 and early 1923.

Q19. And you have said that then you had made your variable density sound and picture 938
films? A. That is right, in 1922.

Q20. What relation did your variable density sound record have to the picture on the film? Did it run alongside on the standard width film, or was it a separate film or what? A. Separate film, a separate film for the sound and a separate film for the pictures.

Q22. In the negative and also in the reproducing? A. Also in the reproducing. In the reproducing, we used the same machine that we had used for recording. We also used it for the reproducer.

939

There was another line of development that had been going on at the same time with reference to the recording of sound. At about the same time the development work was going on, in another section of the research department on the recording of sound on wax records. In 1915, we made reproducing devices, electrical reproducing devices to be used with phonograph records which gave very superior reproduction, but it was not until after the war that the work was carried on aggressively in the development of electric machines for recording sound on wax

records. At that time, a group of engineers under the immediate direction of Mr. Max Field made great improvements in the recording device to be used with the microphone and amplifier and this type of so-called orthophonic electrical method of recording was adopted by the Victor and the Columbia Phonograph companies, for the making electrically of wax records, and in October, 1922, a lecture was given by Mr. E. B. Craft, at New Haven, Connecticut,
941 in which he showed a picture with accompanying sound which was recorded by this means and reproduced. They improved the synchronizing devices, as well as the recording apparatus so that they could make much longer records on the same sized disc. By 1924, these engineers felt that the quality was sufficiently good, so that they could use this system for making talking pictures with commercial success, where previous attempts had failed, and in 1925, the system was shown to the Warner Brothers, and they became interested to take out a license, and
942 in 1926, brought out the talking pictures under the name of Vitaphone.

The first public exhibition of that was August 6, 1926. That was at the Warner Brothers Theatre in New York. Since that time the Western Electric sound recording equipment has been installed continuously.

Q26. Was that first public exhibition in 1926, a success? A. Yes, and soon thereafter a large number of theatres were equipped with equipment suitable for producing talking pictures by that method.

Q27. All of this involved, I assume, the use of

the loud speaker of your development? A. In the public address system, such as was used in 1921, in Washington, a loud speaker was used which was capable of delivering sound at quite a high level. That was the work of quite a long period of years by the engineers, and in 1926, they had a loud speaker of a similar type, but more efficient, with which to experiment in the Warner Brothers Theatre in the reproduction of music, but it was found that the fidelity and the loudness with which the low frequencies and 944
high frequency sounds could be reproduced was not sufficient to give the best results. So at that time, commercial development work was progressively carried out on a new type of loud speaker, which was then under study in the laboratory. This loud speaker had a practically uniform response from two octaves below the middle C of the piano to about one-half octave above the highest note of the piano and was from 50 to 100 times as efficient as the loud speakers previously available. And this type of loud speaker was used in the first presentation 945
of talking pictures by Warner Brothers, and has since been used almost exclusively in almost all equipment in all theatres. I got a patent on this.

Mr. Neave: The patent for that loud speaker development that Dr. Wente has referred to, was involved in the case of Western Electric Company vs. Kersten Radio Equipment, Inc., and Judge Raymond in 44 Fed. (2nd) 644, sustained the patent.

Q29. Now, I would be interested in knowing a little more definitely what the Western Elec-

tric Reproducing system is. Have you a diagram that shows it, does this diagram show it? A. Yes, sir. One is for the recording, and the other the reproducing.

Mr. Neave: I offer in evidence the recording diagram the witness has before him.

(Marked Defendant's Exhibit O in evidence.)

947 The Witness: This diagram shows the various parts of the apparatus of the Western Electric Sound Recording System, as it is used for the making of talking pictures in the typical sound picture studio. There are four rooms, four or five rooms indicated here; at the extreme left is the studio stage in which is located—

Mr. Ward: Your Honor, I object to this unless the defendant uses it.

Mr. Neave: They do use it.

The Court: Of course, the question here
948 is what the defendant uses, and if the defendant uses this system, why, all right.

Q32. Do you know whether the defendant uses this system? A. Yes, sir. At the extreme left is the studio stage in which is located, as I said, the scene which is to be photographed and recorded. Here are located the cameras and the microphones, generally one or more microphones are used. In this particular case, two are indicated which are of the condenser microphone type which I have discussed previously. And associated with these microphones, each micro-

phone, is an amplifier, which are enclosed in the case as shown, and the output of these amplifiers is connected to a panel on a table which is shown in the room designated as the monitor room. In this room, there is indicated here a mixer, and by means of this mixer, the person in the monitoring room can control the relative amount of current coming from the microphone amplifiers, on the way to the recorders.

The microphones in the studio stage are located in different parts of the scene, and by 950
means of this mixer, the amount of sound coming from different parts of the scene that is to be recorded can be controlled.

On this table is also located another control box, which is here indicated as the volume indicator. With that volume indicator, the attendant in the monitoring room can vary the level with which the sound is recorded.

In this room is also located the monitoring horn which is supplied from the recorder and reproduces the sound just as it is being recorded. The attendant in the monitoring room can look 951
through a window into the studio stage and by means of his control can so adjust the sound that is being recorded as to be most appropriate for the scene that is being photographed.

In the room to the right of the monitoring room is the amplifier room in which are located the main amplifiers which increase the currents by thousands of times as they come from the microphone and are being delivered to the recorders. Part of the output of the amplifiers is connected to the film records, designated here as "film recorder", in the extreme right of the

952 *Edward C. Wente—For Defendant—Direct.*

picture, in which the sound is recorded photographically, by the so-called sound on film method; and part of the output is also connected to the disc recorder. This disc recorder is a recorder of the type such as you have in the case of a phonograph, and makes a record on a soft wax roll, and is in such shape that it can be reproduced immediately after recording, which it is impossible to do with the photographically recorded records.

953 The purpose of this disc recorder is that it enables the director to listen to the sound that has been recorded immediately after the scene has been photographed.

Below the amplifier room is located the power room. In this power room is a motor which is driven by a vacuum type control device, so that it will always run at exactly constant speed, even if there are line variations, there may be variations either in frequencies or in voltage, but the motors will always run at the same

954 speed.

Mr. Ward: Your Honor, I object, the defendant does not do any of this stuff, and why put it on the record. What is the materiality of this? This all occurs after what is claimed in the patent is done.

The Court: I do not know.

Mr. Neave: That is what the defendant does.

Mr. Ward: That is all the tail end of it.

Mr. Neave: No, Mr. Ward's statement seems to have been, his inferences seem

to be that the defendant copied plaintiff's system, which it has not done at all. It has copied this system, it is using this system, which was developed prior to the time that the plaintiff had any appearance here at all. I am coming to that part in a minute, as soon as I show what it was they have.

The Court: He is pretty nearly through, but we must have some limit to this.

Q33. You have gotten now to the power room, 956
and then there seems to be a dotted line from the power room to the camera on the left, and to the film recorder on the right. What is that supposed to indicate? A. That connects the motor of the camera and the motor of the recorder to a distributor which is driven by this constant speed motor, and with this system, the motor there, as it is termed, is interlocked, that is each motor will make the same number of revolutions. And also by this system the motors are run at a uniform speed which is necessary 957
for the proper recording of sound.

Q34. So that your picture and your sound are taken synchronously; is that it? A. That is right.

Q35. Up in the upper right-hand corner of this drawing there is something marked "optical". Is that the light valve of which you have spoken in this case? A. That is the light valve, yes, sir.

Q36. What does the valve consist of? A. Well, the light is focussed on a slit aperture by the lens to the left. This slit aperture is

formed by two very light ribbons, which are separated by a space of something less than 2/1000 of an inch, and these ribbons being metallic ribbons are located in a magnetic field which is supplied by a magnet, by horseshoe type magnets here shown, and when current passes through these ribbons from the recording amplifier, they will oscillate, move towards and away from each other, and thus vary the opening of this slit aperture in accordance with
959 the current flowing through them, and this light from this slit is focussed by a second lens into a narrow transverse line of light onto the film, which, in the recording, of course, is moved at a uniform speed.

Q37. Now, we have gotten so far, you take two negatives simultaneously, one of the sound, and one of the picture; that is right, so far, is it? A. That is right.

Q38. It appears in the stipulation in this case, that the defendant then develops the negatives separately, and prints them onto the one posi-
960 tive film, both on the same side, arranged longitudinally. When did the Western Electric Company first develop that film record?

Mr. Ward: Wait a minute. You are not setting this up as an anticipation or prior use, I hope?

Mr. Neave: No, not at all.

Q39. This being the sound, variable density sound record on the same positive film as the picture record, when did the Western Electric Company first do that commercially and in the

laboratory first? A. Well, I can't say exactly when that was first done in the laboratories, because it was a question that was discussed from time to time as to—I think that was about 1925.

Q44. Did you do any work on recording sound on film before that? I understood you said you did. A. I started in 1920.

Q45. Had you previously had, at that time you did not have your sound and picture record on the same positive film? A. In reproduction, no.

Q47. It was about 1925 that you got them 962
both on the same positive film for the reproduction, is that it? A. That is I think about right.

Q48. Now, you described your light valve here, and also there has been some talk of the plaintiffs having used or proposed to use a glow tube. Are you familiar with the glow tube? A. Yes, I am.

Q49. Does it produce as great or greater amount of illumination than the light valve, and what is the relative capacity of each in that connection? A. The light valve produces on the order of ten times as much exposure of the 963
film.

Q50. It has appeared in some of the patents that are in evidence that it was thought that it might be disadvantageous to photograph the sound record and the picture record on separate negatives because they might get them out of synchronism; did you have any trouble in that connection? A. No.

Q51. How did you remedy the difficulty if there was any? A. Well, we used an electrical interlock.

Q52. That is the one you have spoken of? A.

964 *Edward C. Wente—For Defendant—Direct.*

That is the one we have spoken of; in the first picture that we took with recorded sound we used this interlock.

Q53. So that then you ran it synchronously in spite of them being on two films? A. That is right.

Q54. You stated that the first public showing of Western Electric talking motion pictures showing this was August 6, 1926. Had any motion picture producer except Vitaphone under-
965 taken regular commercial production of talking motion pictures prior to that time, as far as you know? A. No, none of the producers.

I said that the Vitaphone Company had a license from the Western Electric the Vitaphone granted a sub-license to the Fox Case Company in December, 1926, and this method of licensing was taken over thereafter by Electrical Research Products, Inc.

Other motion picture producers thereafter were licensed by that company, in May, 1928, the Famous-Players-Lasky Corporation, Metro-
966 Goldwyn-Mayer, United Artists, Universal and Firnatone got licenses.

Since then others have taken licenses here and in foreign countries.

In this country about 5,500 and abroad about 3,200 Western Electric reproducing equipments have been licensed by the Electrical Research Products, Inc. up to the present time. About fifty-five, foreign countries roughly.

I have described the work of the Western Electric Company that they did on this sound-on-film method and on photographing the sound and the pictures on separate negatives, and then

by 1925 joining them together on the same positive, and on the same side of the same positive.

Q66. Up to that time or thereafter did you have any knowledge of the work of Vogt and his associates or any of the Tri-Ergon companies anywhere in the world?

Mr. Ward: What time is that?
Mr. Neave: 1925 or 1926.

A. I had no knowledge. 968

Q67. Had you any knowledge of any of their patents or publications? A. Not at that time.

Q69. Now, it has appeared that in 1927 Mr. Engl came to this country with certain apparatus that he brought from abroad. Did you see any of the films that he had here then? A. I didn't see any of the films, no, sir.

Q70. I have here what purports to be a list of the first 25 theatres in which the Western Electric film equipment was installed. You are familiar with that list, aren't you? A. Yes. 969

Q71. When you speak of this film equipment, does that mean with the sound and picture record on the same positive film, sound and picture on the same positive film? A. I think that is theatres where the equipment is with the picture and sound on the same positive film.

This list that I have spoken of is the list of the first 25 theatres in which this Western Electric film equipment was installed.

Mr. Neave: I ask that this be copied in the record.

970 *Edward C. Wente—For Defendant—Direct.*

"First 25 Theatres in Which Film Equipment was installed.

	Location	*Theatre*	*Date Installed*
971	New York, N. Y.	Roxy	7/26/27—F.A.
	Phila., Pa.	Fox-Locust	8/31/27—F.A.
	Phila., Pa.	Fox-Phila.	8/31/27—F.A.
	Newark, N. Y.	Fox-Terminal	9/2/27—F.A.
	Toledo, O.	Temple	9/2/27—F.A.
	New York, N. Y.	Fox-Academy of Music	9/2/27—F.A.
	Springfield, Mass.	Fox-Springfield	9/3/27—F.
	Detroit, Mich.	Fox-Washington	9/10/27—F.D.
	Spokane, Wash.	Liberty	9/10/27—F.A.
	Jamaica, L. I.	Fox-Jamaica	9/10/27—F.A.
	New York, N. Y.	Fox-Audubon	9/10/27—F.A.
	New York, N. Y.	Fox-Crotona	9/10/27—F.A.
	New York, N. Y.	Fox-Star	9/10/27—F.A.
	Chicago, Ill.	Fox-Monroe	9/10/27—F.D.
	New York, N. Y.	Fox-Times Sq.	9/15/27—F.
	Washington, D. C.	Fox-Washington	9/17/27—F.D.
	New York, N. Y.	Fox-Jap. Garden	9/17/27—F.A.
972	New York, N. Y.	Fox-Nemo	9/17/27—F.A.
	Louisville, Ky.	Strand	9/25/27—F.A.
	Kansas City, Mo.	Globe	9/25/27—F.A.
	Terre Haute, Ind.	Grand	9/25/27—F.A.
	B'klyn, N. Y.	Fox-Savoy	10/7/27—F.A.
	B'klyn, N. Y.	Fox-Folly	10/10/27—F.A.
	B'klyn, N. Y.	Fox-Ridgewood	10/11/27—F.A.
	Elizabeth, N. J.	Fox-Liberty	10/14/27—F.A.

F.A.—Attachment to existing Disc Installation.
F.—Film Installation only.

F.D.—Film and Disc completed on date indicated.

(Note: Dates indicate completion only, and not dates opened to public.)"

973

Mr. Ward: I would like to have the witness testify a little more definitely whether in these 25 installations they did have this method of film. Mr. Neave asked him about whether he though they did. I would like to know that definitely.

Mr. Neave: Let me get something more in that the Judge hasn't seen yet in this list.

The Court: Do you want to get that first that Mr. Ward mentioned?

Mr. Neave: It is on the same line.

974

The Witness: This list indicates that in many instances this film equipment was added to a disc installation.

Q75. That is, the reproducing machinery was such that they could use either the disc or the film to get the sound— A. That is right.

Q77. Now, confining your attention only to the film, in these installations did they have or did they not have the film in which the sound record was on the same film as the picture record? A. The sound record was on the same film as the picture record.

975

Mr. Neave: I thought that this note about this disc might be confusing.

Q78. Are you familiar with the Fox Company's use of this Western Electric apparatus in the early days about 1926, which was earlier than this? A. Yes, in the early days.

Q79. What were they using of the Western Electric Company's in recording in June, 1926? A. They were using Western Electric microphones and amplifiers.

976 *Edward C. Wente—For Defendant—Direct.*

Q80. Reference has been made here to Fox Case reproduction in the Harris Theatre in New York in January, 1927, as being done by the Fox Case Company, as I understand it. What Western Electric apparatus was used there? A. In the recording, the Western Electric microphones and amplifiers were used; in the reproducing Western Electric amplifiers.

Q91. Then also some reference was made to a reproduction at the Times Square Theatre in September, 1927. What was it that was used
977 there? A. Western Electric equipment was used for the loud speakers, and microphones and amplifiers for the recording. This Times Square reproduction in 1927 was really the first all-sound production by the Fox system. The other presentations were all short subjects which were accompanied,—were given at the same time as a silent picture was, in the same show as a silent picture was presented.

Q82. In this September, 1927, production at the Times Square Theatre what was that sound, what was it on, was it on the film? A. That was
978 on the film. On the same film as the picture. It was a variable density record.

Q85. The same kind of thing that the defendant is using, according to the testimony here, the same film arrangement? A. The same arrangement of picture and sound.

Mr. Neave: Here is a diagram of the Western Electric reproducing system, which I will offer in evidence without any explanation, as I think it will not be difficult to understand.

(Marked Defendant's Exhibit P in evidence.)

(Witness temporarily excused.)

Whitford Drake—For Defendant—Direct. 979

WHITFORD DRAKE, called as a witness in behalf of the defendant, being first duly sworn, testified as follows:

Direct Examination by Mr. Neave:

My official residence, is Beverly Hills, California.

I live in the Essex House, Manhattan.

I am connected with Electrical Research Products as Vice-President. I have general supervision of the commercial side.

980

In 1927, I was with the Electrical Research Products. Either the latter part of 1926 or the first part of 1927, I met Mr. Engl who came over here from abroad along in 1926 or 1927, at that time. I know Mr. Joy of the Fox interests.

Q10. Mr. Joy has testified here that during that period, or some part of that period, there was some sort of a committee on which sat, if I may use that expression, some members of the Western Electric interests and some connected with the Fox interests, and he said that 981 you and Mr. Crandall were of that committee. Is Mr. Crandall alive now? A. No, Crandall is dead.

Q11. Now, it is true, isn't it, that you during that period did have some conversation with people of the Fox interests? A. I was in very close contact with the Fox interests at that time.

Q12. Do you know how those conversations came about, that is, did the Fox interests approach the Western Electric interests or did the Western Electric interests approach the

982 *Whitford Drake—For Defendant—Direct.*

Fox interests in the first instance? A. In the latter part of December, the Fox-Case Company was a licensee of the Vitaphone Company, sub-licensee, had a sub-license under the Vitaphone license from us, but our engineering and commercial relations were direct with the Fox-Case organization. And through that we were in contact with their experiments on recording and reproducing and their development work.

About that time, the latter part of December,
983 the Fox interests advised us that they were bringing over from Germany some apparatus which they thought might be of interest, and on which they had an option in this country for the patent rights, and asked us to go over this apparatus with them, with a view to asking us, or with a view to our taking a participation in any rights, and paying part of the cost of any rights which might be obtained.

There was a demonstration given—reverting again to the committee question, there was nothing in the formal sense of a committee ap-
984 pointed. We were asked to dine with the Fox Company and meet with them, and meet Dr. Engl and discuss the situation. I represented our company on the commercial side. I took along Dr. Crandall of the Bell Telephone Laboratories on the technical side. We were given a demonstration by Dr. Engl of the reproduction of the records which he had made with his apparatus, and he explained the apparatus to us, and told us the special points upon which he claimed merit.

The reproduction was very unsatisfactory; it was not of good quality. He had considerable

difficulty on making the apparatus function. The type of recording or the methods he used or the individual units of apparatus which he used in recording and the roproductions were quite at variance with our own development work, and quite at variance with our own ideas of the correct line of development work.

Q13. That is, you, before you saw any of this Engl apparatus, knew of the Western Electric development? A. Well, I was quite familiar with it. It was part of my responsibility to follow 986 that and deal with it from the commercial angle.

Q14. What had the Western Electric Company done, as far as you know, with reference to the film, the sound on film method? A. They had successfully recorded the sound on film and had recorded it in the laboratory. We had not yet at that time produced it commercially.

Q15. Was it the laboratory work on that you had seen? A. The laboratory demonstration.

Q17. Did you compare that with what you saw of the Engl work. A. I should say that Fox-Case was recording at that time with their 987 own apparatus in which a lot of the elements had been supplied by us.

Q18. Was recording the sound on film? A. Sound on film.

Q19. So recording sound on film was known to you, that is, you knew what the results were before you saw this Engl work? A. Yes, sir.

Q20. And when you say the sound on film, the sound was on what film as reproduced? A. As reproduced the sound was on the same film with the picture, and alongside the picture, pictorial record.

988 *Whitford Drake—For Defendant—Direct.*

Q21. Do you know how the sound and picture negatives were taken? A. In the laboratory work we were using a separate negative for such recording? One for the second and one for the picture; Fox had been doing much of their work on the same film. Either at that time or about that time in their studio they used two films, two negatives, one for the sound and one for the picture. Then they bring them together on the positive.

989 Q24. You were talking about the rather poor quality of reproduction in Mr. Engl's apparatus, I want to know what standard you had to compare it with. A. We had two standards to compare it with. One was the commercial apparatus we had in the field, that is, the disc record and disc reproduction, and the other, of course, was the laboratory standard on the film side.

Q25. And the results, as you had observed them, on the Western Electric work of sound on film, how did they compare with the sound
990 on the disc? A. About the same.

Q26. How did both of those compare with what you saw in the Engl demonstration? A. Much superior; even the Fox recording, with their flashing lamp, was in my judgment at that time away ahead of anything that Engl could show us in 1926 or 1927.

Q27. Mr. Joy said, I think it was testified yesterday, and then I think we communicated with you, until then did you know that you had sat on any committee in 1926 and 1927, with the Fox representatives? A. I did not, I had met them, talked these matters over at their

solicitation, but there was no formality, there was no organized committee.

Cross Examination by Mr. Ward:

The Fox people invited me up to inspect the so-called Tri-Ergon system; and at that time through the Vitaphone Company, we already had a license with the Fox people. At that time, the Vitaphone Company was commercially putting out or about to commercially put out the disc record system. They had not commer- 992
cially put out the sound on film system.

XQ33. I believe that Dr. Wente testified that some of the film system was experimented with in the laboratory prior to the disc system. Do you know anything about that? A. Only from hearsay.

XQ34. But the fact is they were out on the market with the sound on disc system, rather than the sound on film system? A. Yes, in 1926, at the time the Tri-Ergon system came over.

The so-called Case system was a sound on film system, and that Tri-Ergon system which 993
we were invited to inspect and view, here in December, 1926, if that is the exact date, was also a sound on film system. And we had been supplying the Fox-Case with what I call some of the Western Electric equipment, microphones, loud speakers, amplifiers and, at that time, I think they had an interlock system of ours.

XQ38. And this glorified so-called interlock system was nothing in the world but synchronous motors properly designed, electrically synchronous motors? A. synchronous motors of a special type.

994 *Whitford Drake—For Defendant—Cross.*

XQ39. Any two motors would be synchronous if they were operated electrically synchronously, would they not? A. If they are of the right type. Any of them properly constructed would be.

XQ41. This so-called interlocking was only putting two motors properly designed together, operated synchronously electrically? A. I do not know that I am qualified to give you a technical explanation of our interlocking system,
995 but it is rather more elaborate than that.

XQ42. Mr. Drake, it was decidedly to the interests of the Western Electric Company, was it not, that the Fox people should not take up the Tri-Ergon System? It was decidedly to the interests of your company that the Fox Company should not take up the Tri-Ergon System? A. I think not. They were already licensed by us, and whether they took up the Tri-Ergon system or not, made but very little difference to us financially.

XQ44. Do you mean by that you had them
996 tied up by a license for 15 years? A. Yes, sir. Our licenses run for 17 years.

XQ47. Does your contract provide that he may rescind it or cancel it, that the license may be rescinded or cancelled at any time, if he likes? A. I do not recall. I would have to take the contract and go through it.

XQ48. Don't you know that it does not so provide? A. Not that early contract, I haven't looked at that for some time. My recollection is it did not have a terminable provision.

XQ50. Notwithstanding the fact that you had the Fox-Case Company signed up on a 17 year

contract, wasn't it still to your company's advantage not to have them take up this Tri-Ergon system? A. At that time we did not, because I was representing our company commercially, and that phase of it never entered my head. 997

XQ51. You had patents or were seeking patents on your own system of reproduction for these things, and you had done developmental work, along a particular line, and it would have been rather embarrassing, would it not, to have to digest a different system brought over by those people, and exploit it? A. Not at all embarrassing at that time. We had not gone out with the film system. 998

XQ52. It would not have embarrassed you at that time, because you had not gone out with the sound on film system? A. Not commercially.

XQ53. When this system was brought over here, your engineers and yourself were given complete access to it, were they not? A. No. My recollection was that we were not permitted to examine in detail certain parts of the apparatus; that we relied mainly, as far as my contact with it was concerned, on statements made to us by Dr. Engl and by a merely general exhibition. I think we were not permitted to look into the amplifier very closely. That is the only part I recall at the moment. 999

XQ57. You were given complete access to the camera for taking the sound pictures, the reproducing machine for reproducing them? A. I do not know quite what you mean by complete access. We were shown the camera. And Dr. Crandall was shown the camera.

XQ59. And you had shown your system of

1000 *Whitford Drake—For Defendant—Cross.*

taking the sounds and pictures on separate films, and then developing each separately and printing on the same film? A. I do not recall that we were shown any actual operation of the equipment, except the reproducing equipment. As far as the recording was concerned, I do not recall that we were shown any of that.

XQ60. Was any sound on film which had been made by Western Electric at that time actually compared in test with the Tri-Ergon rec-
1001 ords that you saw alongside of each other? A. No. Not at all, that I recall the comparison between the two was based on my knowledge of my company's laboratory experiments contracted with what I saw up there at the Fox studios.

My company did not undertake to bring any sound on film records down there to compare with the Engl or Tri-Ergon system, for the others to investigate the matter and to make any decision on, that I recall.

XQ65. How many licensees in December, 1926,
1002 did the Western Electric Company have approximately on the sound disc system? A. Well, first, our licensees are not confined to either system, they are broadly licensed. In 1926, they were licensed for the disc system, and not that alone, they were licensed for any system or broadly under anything we had at that time. We had one licensee using the disc system, and one licensee using the film system.

XQ67. You had a licensee using the film system when? A. In December, 1926. That was Fox-Case. They actually used the lamps manufactured by Mr. Case, and used the recording

apparatus developed by Fox-Case or Mr. Case, I do not know which. What they were using of the Western Electric Company at that time, under our license were our Western Electric amplifiers and loud speakers, microphones, and similar apparatus; practically everything they used with the single exception of the lamp itself in the camera and the camera mechanism was furnished by Western Electric. 1003

XQ71. And the system of recording and reproducing the sound, that was not furnished by Western Electric? A. The greater part of the reproducing system was furnished by us. I think the pick-up mechanism at that time was a system they had built themselves. 1004

XQ72. What do you mean by pick-up? A. Where the sound is taken off of the film record, they were using our photo-electric cell and photo-electric cell amplifiers, and the remainder of the system was Western Electric.

XQ73. How many licensees for the sound on disc system did you have in 1927, and by licensees, I do not mean in the technical sense of having a direct license, but generally licensees using the sound on disc system? A. Only one throughout 1927. 1005

XQ75. When did you have any number of licensees for sound on disc, using sound on disc? A. 1928.

XQ76. 1928; and throughout 1927 you had two licensees only? A. Correct.

XQ77. One the Fox Case using sound-on-film which Mr. Fox or the Tri-Ergon Company brought to them—

1006 *Whitford Drake—For Defendant—Cross.*

Mr. Neave: Wait a minute; that is wrong.

Mr. Ward: He will correct me if I am wrong.

XQ78. And the other — some other company using sound-on-disc? A. The Vitaphone Company using sound-on-disc.

XQ79. Was anything wrong in my question that Mr. Neave took exception to? A. Yes. The
1007 Fox system of recording and reproducing bore no relation to the Engl system at all, as I saw it.

XQ80. Who brought them that system? A. You mean the Fox Case system?

XQ81. Yes. A. Well, as a system it was made up of various Western Electric parts, and in fact it was developed around Western Electric amplifiers.

XQ82. What Western Electric parts? A. Amplifiers, loud speakers, microphones. The particular contribution of Fox, as I recall the story, was the lamp itself and its application to a
1008 camera.

XQ83. And when was it that Western Electric had any other licensees than Fox Case using the sound-on-film system? A. As soon as we licensed the remainder of the producers in 1928 they were supplied with both systems.

XQ84. So the fact is that you had access to the Tri-Ergon and the Case system in December, 1926, and you got out your sound-on-film system in 1928, in a substantial commercial way? A. No, we had furnished Fox with apparatus in 1927.

XQ85. I said in a substantial commercial

way. Did the Fox Company use your sound-on-disc system in a substantial way? A. No, they never used that.

XQ86. Referring to the committee, were you and Dr. Crandall and Mr. Joy and Dr. Engl, did you meet and discuss these matters from time to time? A. I do not recall meeting from time to time. I think we were given this demonstration and had one evening meeting; as far as I know, that was the extent of the meetings, and I think we had one discussion either before or 1010 after that, to my recollection. I gave no formal report to anybody.

XQ89. You didn't participate in giving any report to anybody? A. Any report I may have made was—I may have had some verbal discussion with Mr. Courtland Smith representing Fox, I certainly discussed it with my own organization and told them my impressions. I can't recall my conversation with Mr. Smith, but presumably it was the same as I gave my own people.

XQ91. Was it not your custom or Dr. Crandall's to prepare data and file memorandums on 1011 these kind of conferences that you had? A. Not informal conferences. I do not know where Mr. Neave got all the details that he cross-examined Mr. Joy here on with respect to certain features of the Tri-Ergon machine and system. I have no data that I took at that time which he may have looked at, but I do not know what Dr. Crandall had.

XQ94. In the latter part of 1926, what parts of a complete sound-on-film system did the Western Electric put out? Take the recording first

and then the reproducing. A. We had furnished all parts of a complete sound-on-film recording system with the exception of the light valve, because we had not advanced that at that time to any commercial degree. We had no printing apparatus at that time; we never have had that. We did furnish loud speakers, amplifiers, motors, interlocked system, speed control mechanisms, not the cameras. We had not put sound heads for reproduction out at that time. We do not use
1013 a sound head for recording in that type of system. We use a separate machine. We had not then furnished separate machines for recording sound to our licensees.

XQ105. December, 1926, you were not in a position to put out this apparatus that I have mentioned, were you? A. We were in a position to manufacture it and put it out if there had been a demand for it. We had not done it.

As to how familiar I was in 1926 with the technical end of my company's affairs with respect to sound on picture work, I knew, of
1014 course, in a general way the general direction of development, but I am not a technical man in that class of work.

As to whether data supplied to our company of a technical nature with respect to sound and picture reproducing or recording came before me, our technical information came from the laboratories, the Bell Telephone Laboratories. I was the point of contact between the commercial side of the laboratories, but I was not in the laboratories.

As to whether data pertaining to this subject of a technical nature submitted to the Bell Lab-

oratories would be brought to my attention, it might or might not, depending on how it came.

I had first heard of this Tri-Ergon system in December, 1926. I had never heard of it before that, never heard of the name Tri-Ergon; never heard of Dr. Engl.

Re-direct Examination by Mr. Neave:

I said that these conversations that I had with Fox interests were initiated by the—various suggestions that we might take an interest with the 1016
Fox Case people in this Tri-Ergon and furnish part of the money, were initiated by the Fox Case people, that is correct. We did not take an interest with them and furnish some of the money.

Re-cross Examination by Mr. Ward:

The Western Electric Company or its affiliated companies became rather intimately tied up or related with the Fox Company not long after December, 1926, in a financial way. The Fox 1017
companies were under considerable obligation to them financially, some time after December, 1926. I would have to check my records as to just what took place. My recollection is it was in 1929. That is my recollection, but I would like to check my notes.

We supplied the Fox companies with substantial quantities of recording apparatus from 1926 on. We furnished the first large quantity of reproducing apparatus, not directly to the Fox Company, but to the theatres in which they were showing their product, in the early summer of

1018 *Lloyd A. Jones—For Defendant—Recalled—Direct.*

1927. As to the amount of that apparatus supplied in 1926 and the early part of 1927, I do not know. The volume of business from the Fox angle was not so large as it was with some others, and I really do not recall what the exact figures involved were at this time.

RXQ125. When did you first install in the Fox Studios your sound-on-film recording apparatus? A. We had portions of our apparatus supplied
1019 to them—

RXQ127. I do not mean the portions, I mean including the light valve and everything. A. I think the first light valve installation was in 1927.

RXQ128. When did you first install in the Fox laboratories your first reproducing apparatus? A. I do not recall that, it presumably must have been somewhere about the latter part of 1926, because they were equipped with and had some of our apparatus, but I cannot say again that that was complete.

1020 RXQ129. You understand I am talking about complete apparatus, complete sound-on-film apparatus. A. My recollection is that was in the spring of 1927, early spring of 1927.

LLOYD A. JONES, recalled.

Direct Examination by Mr. Neave:

Q848. I understood you to say that the average number of striations in the sound record

such as the defendant uses would be about a thousand to an inch or per inch. To what frequency would that correspond? A. That would correspond to a frequency of 18,000 cycles per second. It is rather high.

Q850. How many striations per inch are there really used, and up to what frequency does that mean? A. Well, at one-quarter of that, at 4500 cycles per second, it would be 230 lines per inch.

Q851. Is that more nearly the average than 1022
1,000 lines per inch? A. I should say in the commercial installations of the present time that 250 lines per inch is fairly well up towards the top.

Q852. Does that take care of all the frequencies that you need? A. I shouldn't say it takes care of all you need; it takes care of about all we get.

Cross Examination by Mr. Ward:

XQ853. You understand my question when I 1023
said the average, in my question. A. My mental arithmetic was defective.

XY854. Was it your mental arithmetic or have you had better information since you left the stand? A. I had the information when I was on the stand.

XQ855. Have you spoken to somebody about it since you left the stand? A. Yes, I have. Mr. Neave asked me about it, and when he asked me about it I realized that my mental arithmetic was defective.

1024 *Lloyd A. Jones—For Defendant—Recalled—Cross.*

The film travels through the projector at 18 inches per second for a frequency of 18,000 cycles per second you would have to have 1,000 lines per inch. For a frequency of one-half of that or 9,000 cycles per second you would have 500 lines per inch. For a frequency of half of 9,000, or 4,500, you would have 250 lines per inch.

XQ857. What is the average figure that you
1025 now want to adopt? A. Well, if you insist on the average, I should say the lowest frequency that comes through the usual commercial system is probably about 50 cycles per second, and the upper frequencies—of course, there is not a definite line of cut-off, you must understand that.

XQ858. I do. A. I should say that 6,000 certainly represents a very optimistic estimate of the frequencies. Now, the average of 50 and 6,000 would be 3,025, so that brings it down still lower as to the lines per inch, which is the
1026 average frequency, so the average would be under 200 lines per inch.

Mr. Neave: Mr. Drake, do you recall, told you that he couldn't quite remember when it was that Electrical Research Products made some financial arrangements with Fox, but thought it was 1928. He has just told me now that he thinks he was incorrect in that, and it was 1929.

May we assume that that is changed?

Mr. Ward: Yes.

Edward C. Wente—For Defendant—Recalled—Direct. 1027

EDWARD C. WENTE, recalled.

Direct Examination by Mr. Neave:

As to whether we ever reproduce from two films, one positive film for the sound, and one for the record, using two machines for reproducing, that is done quite frequently. There probably have, from time to time been certain pictures put out by the two film method. The reason for doing that is, they want to get the optimum sound space and picture space, so they 1028
can treat the positive sound records separately and the picture negative separately. In one picture like "Hell's Angels," there were quite a good many sound effects, and the producer there wanted to get the best results that they could possibly get, and they put in quite an investment in the production of the picture, and in the larger cities, the principal points of interest, why, they were put out on two films. Then the sound record was the whole width of the film.

Q91. And the picture record was— A. No, I beg your pardon, the sound record was not the 1029
whole width of the film. The picture record was the whole width of the film.

Q93. How much of the film was taken up by the sound record? How much of the other film was taken up with the sound record? A. I do not believe that I can answer that. My impression is that it was about the same width of track as they use when they print on the common positive.

Q94. And do you also use these two films for reproducing and running simultaneously in previews? A. In pre-views it is done almost exclusively that way.

1030 *Edward C. Wente—For Defendant—Recalled—Cross.*

Cross Examination by Mr. Ward:

XQ95. Dr. Wente, do I understand you to testify in substance that the Western Electric Company had developed loud speakers and microphones to a high degree of perfection before sound pictures were seriously taken up for theatre use; that is to say, prior to 1918? A. I would not say that they were perfected.

XQ97. I just want to get the date. They were
1031 developed to a high degree of perfection, not necessarily completely perfected; that is, you had loud speakers and microphones well developed for commercial use prior to about 1918? A. Well, in 1918, we had microphones, condenser microphones, that I perhaps should not say that they were developed for commercial use, because they were not used very extensively. They had not gone through any commercial tests, service tests but they were microphones of good quality, and under proper supervision would perform satisfactorily. The loud speakers that we had
1032 at that time were quite satisfactory from the standpoint of speech. They did not give sufficient volume to be used in a large theatre for the reproduction of music and particularly as regards the high and the low frequencies that they have to reproduce in the case of music. Amplifiers also were not nearly of the same high character to which they were developed later on. They have been in almost a continuous state of improvement.

XQ98. What I was trying to ask you was, as a general proposition, whether you had these things, such as loud speakers and microphones

perfected so that they were thoroughly commercially satisfactory in about 1918 or 1919? For commercial work, other than talking pictures? A. For certain types of commercial work, yes. For communication purposes.

XQ101. And it is your contention that by 1925, say, you had loud speakers and microphones and amplifiers developed to about as high a degree of perfection as anybody else in this country, or better? A. I think that is true. My company started developing these devices for communication service before they undertook sound picture work at all.

XQ103. So that when people began to get seriously agitated in this country about production of sound pictures, your company was in the position of having these auxiliary equipments which were needed; is that right? A. We had the auxiliary equipment in a rather satisfactory state as far as performance was concerned, and I think they were in a state where they could have been used for the production of talking pictures successfully commercially.

XQ104. Then it is your testimony that this auxiliary apparatus of microphones and loud speakers were not in a satisfactory state in 1926 for sound picture reproduction in theatres? A. In 1926, I think they were satisfactory, because talking pictures were then produced and have since remained as a permanent adjunct, the sound as a permanent adjunct to the picture.

XQ.106. Then am I correct in saying that in 1926, this auxiliary apparatus, such as loud speakers and microphones and microphones and

amplifiers that your company had were as good as or better than those of anybody else? A. I think it was better.

XQ107. At page 513 of your testimony, you say that you devised and developed the condenser microphone. You don't mean that you were the originator of the broad idea of a condenser microphone, do you? A. In general, you might say there are three types of microphones:
1037 There are microphones in which you have a variation in resistance and those in which you have a variation in inductance, and those in which you have a variation in capacity, and those three possibilities were, of course, immediately evident from almost the very beginning of telephony, but as far as I know they never had been, up to that time, even though there had been publications on condenser microphones, as early, I believe, as 1880, a suggestion of it, but they could not have operated without the use of an amplifier; it was the amplifier that made it possible, and not the condenser microphone idea
1038 *per se.*

XQ109. What you mean is that you made certain specific improvements on the principle of condenser microphones? A. The only principle of the condenser microphone as a general principle of having one plate fixed and the other one movable, that, of course, I did not originate. What I did, I was the first to use a stretched diaphragm for one of the plates, and to put the fixed plate in very close juxtaposition, not in juxtaposition, but in very close relation to the moving diaphragm, and proportion the dimen-

sions of these, this fixed plate, so that the diaphragm would give, act uniformly throughout the audio frequency range, just using, say, having one movable plate and one fixed plate may give an instrument which will respond to sound waves, but it is a long way from that to where an instrument can be used, can be said to be a microphone of anything like good quality.

XQ110. The general position of the two plates, and so forth, except from these details of what 1040
you term stretching and particular locations and arrangement, were old? A. It was as old as 1880.

XQ111. What did you say caused them to be made possible in motion picture use, amplifiers, did you say? A. In general. Audion amplifiers, well, yes, I should say audion amplifiers. There may be other amplifiers that would make it possible to, but the audion amplifier is particularly suitable for use with a condenser microphone. That was Dr. DeForest's work, and others, of course, the associate circuits, and the methods of 1041
connecting the condenser microphone to the audion is part of the problem.

XQ114. At page 515 of your testimony you stated in substance that in 1920, you commenced the study of sound records by the variable density method, and decided to use the form of light previously used by Professor Rankine; is that right? A. The form of light modulating device, I should have said there, if I didn't. I never heard it referred to as a light valve; I think the term that Rankine used was photophone, but as a matter of fact, it was generally the light valve,

1042 *Edward C. Wente—For Defendant—Recalled—Cross.*

it was a light modulator, yes. You can call it a light valve. The only thing is in the literature you will find that the light valve, as distinguished from other light modulators is a particular kind of light valve, which has gone into very wide usage. I do not think it is a trade mark. I do not know whether our company has put it on it.

1043 The Court: He says that was an accepted designation.

The Witness: You will find it in foreign literature as well as in this country.

As to whether Eugene Laust devised the light valve for sound recording prior to the commencement of my work in 1920. The light valve I think was used by Laust, and the light valve is in a certain sense, a string galvanometer device with particular arrrangement of ribbons in the magnetic field, and the formation of the light slit, and the construction of this instrument in such man-
1044 ner that it will have a uniform frequency of response, however, I do not believe was disclosed previously.

I was present at the taking of the testimony in the case of the General Talking Pictures Corporation vs. Stanley Company, in Delaware, the case being tried in 1930.

I heard Laust testify there as a witness on behalf of the Western Electric.

XQ1213. Do you know that he testified there, that he used a light valve for recording sound long prior to your date of 1920? A. I do not remember that; he may very well have, though.

Edward C. Wente—For Defendant—Recalled—Cross. 1045

Mr. Ward: May I just hand the witness this page to refresh his memory?

The Witness: The question.

XQ124. I just want you to read it. A. "I started the light valve and I am too busy, and I give up." Is that what you mean?

XQ125. Yes. A. I don't know whether that means he gave up the light valve. As I remember Laust used the light valve also to make a 1046 variable area record, but I am not sure.

XQ126. Your company's employes have published a number of articles, haven't they, on the use of the light valve by Laust some years back? You have seen such articles, have you not? A. I am not certain that I have; I can't recall the substance of the articles.

XQ127. You say that you completed your work on the light valve by early 1923, is that right? A. Well, by "completed," I meant that by early 1923, we had completed a model which we used for the recording of sound-on-film. 1047

As to when I got my light valve sufficiently perfected so as we were ready to turn it out for recording sound in a commercial way, of course, I am employed in the research department, and about the building of these valve, I have no say about as to whether the conditions they are in are suitable for commercial production or not. But so far as the performance of the valve was concerned, it would be a very easy matter to put it in commercial production at that time, 1923. There has been no substantially fundamental change in the valve from that date.

XQ130. We may differ on what you call funda-

mental. Your position is such certainly that they would take your advice as to when it was ready to be put out commercially, that wouldn't be left to the commercial department? A. Well, I would have some say about that possibly.

The commercial department would have something to say about it, whether it is in condition to go out commercially. I meant we have a department which is called the apparatus develop-
1049 ment department, who have charge of the design of apparatus, putting the design of a piece of apparatus in such shape that it can be put into the factory for production.

In a general way, my function is that of research engineer in a purely laboratory way, and when I think I have a problem solved from a research engineer's standpoint I turn it over to these commercial development engineers to design for commercial use.

XQ135. When was it that the light valve left your research department and was transferred to
1050 this commercial engineering department to be designed for commercial use? A. Just in that sense that never took place, and that is true in a great many cases. For instance, in the light valves, we have continued to make improvements in the light valve from certain standpoints from after the time that the commercial or the apparatus development department began to work on these commercial productions of light valves. For commercial production the valve was used first in the transmission of pictures. Now, I do not have the date as to when the first commercial transmission of pictures was inaugurated by the Bell system, but the valve which they had used

for sound recording we modified so that it could be used for the transmitting of pictures, and the valve was developed or was modified for that purpose so that it could be made in the factory.

It is not right that we developed the light valve specifically for the purpose of transmitting pictures rather than recording sound, in the beginning we developed the light valve first for the recording of sound.

But it so happens that we first used it com- 1052
mercially for the transmission of pictures.

XQ139. Then don't you think it is a fair inference that it was not, in the opinion of your company, fitted for the recording of sound until some later date? A. I don't see how you can make that inference necessarily.

XQ140. Did you use it for the transmitting of pictures first, or for the recording of sound first, in a commercial way, in each case in a commercial way? A. Used it for the transmission of pictures first in a commercial way.

XQ141. Why did you not use it for the trans- 1053
mission of sound first when you say you started out developing it for that purpose, for the commercial production of talking pictures? A. There were quite a large number of problems that had to be worked on in getting the apparatus for the recording, of the study of film emulsions, quite a lot of work we did for several years there, and the question of the transmission of pictures came up at a time when the American Telephone & Telegraph Company said that they wanted to transmit pictures and put it up to the engineers at the laboratories to devise a method for doing it which would be commercially suc-

1054 *Edward C. Wente—For Defendant—Recalled—Cross.*

cessful, and a good deal of effort was directed towards the accomplishment of that object.

I cannot give the year in which the light valve was first used commercially for transmitting pictures. I have no data on that. It was not used in 1926 commercially for pictures, because the pictures that were brought out in 1926 were with the disc.

As to when it was first used commercially for
1055 sound on film with respect to sound pictures, that is a question that I cannot answer very definitely either, because of the fact that most of that work was done not in the Apparatus Development Department. I know that in 1926 they made some pictures and records, and in 1927, at the Fox Case Studios, they had light valve recorders, and they made some short subjects there, but just what subjects were shown in the theatre, I could not say.

It would be around 1927 or 1928, I think in the early part of 1927 is when Fox was the first to
1056 show any sound—Fox did not use light valve, but I mean it could not have been before that. It may have been in 1928.

I first made a sound picture record in our laboratory, in 1923. I actually made the picture record at that time as well as the sound record.

I first actually reproduced sound pictures in our laboratory in 1923.

XQ153. Then in your direct testimony at page 517, with reference to making sound records on picture film in 1922 experimentally, you had reference there to making the sound record on a sound picture film, not on making sound picture records in 1922? A. Yes; that record was made

with the Rankin system, and we were interested in mainly getting the sound—

XQ154. And at page 517 of your testimony, you testified, in substance, that you made sound records and picture records on separate film and kept them separate throughout, both for recording and for reproducing. A. That is right, that was in 1923. In taking those sound picture records on separate film, I took them synchronously or simultaneously.

XQ157. In order to refresh your memory more 1058
nearly to the particular date when you did that, do you recall testifying in the Delaware suit that I referred you to, that you said that by the latter part of 1923 you made the synchronous picture and sound record? A. I have the date here as April, 1923,—I beg your pardon, that is right, October 1923. October, 1923, is the first date I did that even in the laboratory.

XQ159. Referring to your testimony at pages 565 and 566, with respect to 87 to 94 in this suit now—with regard to reproducting from two films, one sound and one picture, you said that was done 1059
quite frequently, and later on you testified that it was done from time to time on certain pictures.

Can you tell us a little more definitely how extensive that entirely separate sound and picture system that you are referring to there and to which I have already referred you elsewhere, is being carried out by your company's licensees today? Is it not a fact that it is a very minute per centage of the total sound picture production? A. Well, I don't know how minute. As late as October 30, 1931, there was an installation in a theatre in Los Angeles, and in quite a

number of places, "Hell's Angels" was reproduced that way, and some other pictures—That theatre in Los Angeles, I have as the Forum.

There are literally thousands of sound picture theatres in the country.

I would say that the use of this separate sound picture system throughout which we are talking about is the exception today rather than the rule, it is not the rule.

XQ163. And perhaps you can tell us what was
1061 the type of the film in which this separate film system throughout was used in this California theatre. What was the picture in which it was used, the name of the picture? A. Oh, in California, that I don't know, not this last installation. For all I know, it may have been one where it had to be done that way for special reasons, possibly so.

XQ166. You simply know that you have a note there that that is one theatre in which this system that you are talking about was run? A. That was one theatre that I mentioned that was in
1062 1931. In 1930 however, there was quite a number of theatres; some dozen or so, anyway. A dozen or so against thousands for the other system. I have obtained these notes for general information on these few theatres in which these separate films are run. They were compiled especially for use in this testimony.

XQ170. To show that at least there have been a few cases where separate films have been used; that is the object of the notes, you have had compiled for you, is it not? A. I don't know—

XQ171. You would not have that data for your regular run of work, would you? A. No, I am

not in accounting department, to keep track of them, that is true.

XQ172. Those instances you have there are Western Electric equipment instances? A. Those are of Western Electric. There may be other theatres that use separate films installed by other manufacturers, of which I have no record.

XQ173. At page 527, Q37, etc., you were questioned about when was the first time that you, in the laboratory recorded sound and pictures on 1064
separate films and then printed the sound and picture records on the same positive film. And you testified that you thought it was 1925. Was that 1925 or 1926 that you did that? A. Well, I did not have any exact data on that, for the reason that I am, as I said before, in the research department, and although we did make a sound and picture record in 1923, we did after that very little in the way of getting a sound picture, because we had at that time tested the means of synchronization which worked satisfactorily, and there was not really any point in our department 1065
making any further pictures, sound pictures. We devoted all our attention to the making of and the improving of the record. Whether we were going to have pictures with it, in what manner, whether on the same film or on different films, that was thoroughly evident we had no concern with—

XQ174. But you have very definite data as to when you first took the sound and pictures simultaneously and separately, and kept them separate throughout, have you not? You have testified definitely on that. A. Yes.

1066 *Edward C. Wente—For Defendant—Recalled—Cross.*

XQ177. Why have you not got data as to when you first took them simultaneously and separately and then later printed them on common positive stock? A. Well, I got this data on the theatre installations from the Electric Research Products Company, who have in their department, keep close track of it, check of what is going on commercially. However, what is done in the laboratory, we have to check through with
1067 other engineers and through note book records, and I have not done that with the Apparatus Development Department. We, in our department after 1923, I don't believe ever did make any other sound pictures—

XQ178. Are you testifying from hearsay knowledge here in these matters you are talking about, data given you by somebody else? A. In the Apparatus Development Department. That is the reason I could not state definitely as to when that combined picture was made. But I have their information—

1068 XQ179. I want you to confine yourself to your personal knowledge now, please. You have testified here— A. What I have observed myself, when I have seen them make combined records. That I have never seen.

XQ180. You have never seen in the laboratory of the Western Electric Company or did not yourself take the sound and pictures simultaneously on separate films and then print from them two negatives onto one or the same positive film? A. We only made one or two pictures that I had anything to do with directly, and we made the picture record on one film and the sound record on another, and then we projected this, using

1069

the same machine for reproducing that we did for recording. We did not actually go through any of the printing processes because that was thoroughly obvious and had nothing to do with getting—

Mr. Ward: I object to the volunteered part of his statement.

XQ181. The answer, then, to my question is "No," is that right? A. No, we did not do that. 1070

Mr. Ward: May I amend that question by saying "Western Electric Company or its affiliated companies"?

Mr. Neave: Will the answer be the same?

XQ182. Will your answer be the same if I say "Western Electric or Bell Laboratories or the Electrical Research Products Company"? I just used the broad term "Western Electric" generally. A. The answer is "No." 1071

Mr. Neave: Is you answer the same if you include these other interests of Western Electric, the Bell Telephone Laboratories, and Electrical Research Products?

The Witness: Yes.

XQ183. That is, the answer is "No"? A. That is, I haven't actually been in any of the laboratories of these people or seen it made there; I have not been there when it was being made.

1072 *Edward C. Wente—For Defendant—Recalled—Cross.*

XQ184. When to your knowledge did the Western Electric or your affiliate companies or any of its licensees take sound and picture records simultaneously on separate films and then print onto a single positive? A. Well, I can't answer that question any more than I answered the other one.

XQ185. Then all of the testimony you gave with regard to dates along that line was from hearsay? A. As far as I have personally seen
1073 or taken the records and personally printed them, I haven't done that.

When I, in the laboratory, took the sound and pictures on separate films and kept them separate throughout, the stock which I used for the sound records at that time, in 1923, was negative stock, the same as the picture stock.

As to those sound and picture records when they were taken on separate films and kept on separate films, I do not know whether I personally developed them, but I saw them being developed, they were developed separately. They
1074 would be developed in a different developer. The reason why we developed them—there is one reason we couldn't develop them any other way, that is, the facilities that we had was a tray developer. We developed one strip of film in a tray, and we would throw that out and make fresh developer for the other film.

I don't know whether we used the same developer formula for each.

XQ194. You do not know what the developer was, whether it was the same developer or a different developer, but you do know because you had only one tray or the facilities of one tray, you developed the sound track, and then after-

 1075

wards you threw that out and put some more developer in and developed the picture track? A. That is my recollection.

Those strips of film that I made in 1923 with the sound and pictures on separate film were 200 feet long.

I think we made about two or three trials of such records of sound and pictures in 1923 on films.

I have no recollection that we made any sound 1076
and picture records in 1924, because we were working with the sound principally.

As to how many times I made sound and picture film records in 1925, from 1923 on, that part of this work was being done in the apparatus development department, gradually more and more of the work was being carried on over there, and as far as I can recollect now, I am not sure whether we made any more picture, sound and picture records; I am quite positive that we did not.

XQ199. As far as you know you have no 1077
knowledge of doing any more of that work in making sound and picture film records, sound and pictures, until after 1926? As far as you yourself personally are concerned. A. I do not know what the 1926 is for; I do not believe even after 1926 I made any.

As to whether I saw sound and picture film records made, I have seen them photographed. In 1926 I saw them make some of the Vitaphone pictures. But those were disc records. I didn't see them make any film records in 1926.

XQ206. When do you personally know that the first commercial use was made of the method of

1078 *Edward C. Wente—For Defendant—Recalled—Cross.*

taking the sound and picture simultaneously on separate strips and continuing the separate strips throughout to the projection, by you or Western Electric or its affiliate companies? You understand I am limiting it now to the sound and pictures being separate throughout, taken separately? A. I am trying to get straight in my mind as to how much I saw of this, if you are going to limit the question to actual seeing.

1079 XQ208. Saw or know of by personal knowledge, not by reading something or by hearsay. A. Or by hearsay. I do not know that. From a source which I think to be reliable, I understand it was in the early part of 1927.

XQ210. From knowledge other than your own, you believe that it was early 1927, that your company or your affiliates first took the sound and picture on separate films simultaneously and developed them and kept them separate and reproduced them on separate films? A. I think that is probably as far as the commercial pro-

1080 duction was concerned.

XQ211. Now, as a matter of fact, was that done at all in 1927? A. Well, that is, as I say, I haven't—I only know with regard to the Fox Case that we supplied them with apparatus for interlocking—

XQ212. Hasn't testimony been given here that Fox Case did not use your system for recording its films, or am I wrong? A. I do not know whether they used it commercially. They had light valve recorders at least the first part of 1927, in the Fox Case Laboratories, and they made, if my information is correct they made pictures by both methods for comparison purposes. They were licensed in December, 1926.

Edward C. Wente—For Defendant—Recalled—Cross. 1081

XQ213. Of course, receiving a license hasn't got anything to do with what they were actually using. They received a license also to record on discs, didn't they? A. I believe they did. I do not know personally that Fox didn't record on discs in 1927.

XQ215. Do you know whether in those instances that you referred to of Fox Case or Fox in 1927, that they used the single system throughout, took the sound pictures on one film, developed and kept it on one film and projected it? 1082
A. I only know that the picture "Sunrise" was a scored picture, and in that case they would have to use two separate films.

XQ216. But they wouldn't be simultaneously taken, would they? A. It wouldn't be simultaneously taken,—did your question state that?

XQ217. I may not have, but that was a scored proposition where they had to be taken separately. A. Then I do not know.

XQ218. As a matter of fact, you really do not know what system the Fox Case people were 1083
using in taking their films and reproducing them in 1927? A. I know they were doing a good deal of experimenting at that time, and we supplied them with various kinds of equipment for connecting their recorders and cameras, and our engineers spent—this I know—spent a good deal of time up there.

As to the theatre demonstration that I testified about, given by Fox Case in the early part of 1927, I do not know personally how they reproduced, as regards the sound and picture films, I have never been in the Fox Case Laboratories until quite recently.

Edward C. Wente—For Defendant—Recalled—Cross.

XQ221. I believe on your direct you testified that when you did take in your laboratory the sound and picture records simultaneously on separate films, you used on the sound film a narrow sound track rather than devoting the full width of the film to the sound track, in the recording at that time. A. Well, as we were then interested mainly in getting a good sound track we did actually use a sound track which is
1085 two or three times as wide as the one that is used at the present time.

XQ223. Then were you mistaken in giving your testimony in answer to Mr. Neave's question when you were recalled, at page 566, Q90, etc.: "A. The sound record was the whole width of the film." The next answer was: "No, I beg your pardon, the sound record was not the whole width of the film." The next answer was: "The picture record was the whole width of the film," and the answer at the top of page 567: "My impression is that it was about the same width of track as they use when they print on the com-
1086 track as they use when they print on the common positive." Referring in those answers to sound records again, what are the facts? A. Well, the facts are that the sound record that we made, most of them were about a quarter of an inch wide, but not all of our records were made of the same width. The standard width of the sound track that I referred to is about 100 mils, it is a tenth of an inch.

When I used the separate film for the sound record in our laboratory work I used one-tenth of an inch and a quarter of an inch, other widths, too. We went up at least as wide as a quarter of an inch, not appreciably wider.

Edward C. Wendt—For Defendant—Recalled—Cross. 1087

With regard to the list of installations put on the record with respect to my testimony, pages 534 and 535, this list is supposed to represent 25 theatres in which the Western Electric film equipment was installed, referring to a system embodying sound on films.

XQ232. Have you any personal knowledge that these licensees were equipped at the dates indicated in this list with apparatus for either recording or reproducing sound from a sound film, 1088
or did you just get that list from somebody? A. I got this list from the Electrical Research Products Company, but I have checked this. This gives the date on installation, but I have checked the first, perhaps not all 25, but certainly the first dozen of them, against the records which we have in the laboratory as to the completion of the shipment of these.

XQ233. Then you know what apparatus is referred to in this list with respect to each of these parties, or don't you know? A. Well, that is the best knowledge that I have. I didn't per- 1089
sonally deliver these or even see these pieces of apparatus.

XQ235. Or inspect them at all? A. But I have the records from two sources which seem to check; that is the best I can say as to that.

XQ236. You have no personal knowledge as to whether these licensees installed or used the film or disc, have you? A. But I have another check here, I know that the Times Square Theatre did show Sunrise in September, 1924, and it was advertised as Fox Movietone, so that it must have had a reproducing equipment of the film type. That was in 1927.

1090 *Edward C. Wente—For Defendant—Recalled—Cross.*

XQ238. At page 536, direct Q81 to 83, you testified in substance with respect to the Times Square Theatre reproduction of 1927, that that was really the first all-sound production of the Fox system, and at Q83 you testified that the sound and pictures were on the same film. A. That is my understanding, yes, that that is correct.

XQ239. It is a fact, is it not, that with regard
1091 to the films shown there they were taken and reproduced on what we have referred to here at the trial of this case as the old one-piece system throughout, sound and picture taken simultaneously on the negative and then they developed the sound and picture together on one negative and printed on the positive; is that right? A. That is not right. I am quite certain, as the information I got from the Fox Film Corporation was that that was a scored picture. I did not see it myself, but they said that the picture had orchestral accompaniments and things of
1092 that sort, and in the review of the picture, why, it did, one would conclude from the reviews of the picture that that was a scored picture. I did not see the production.

As to whether I personally know anything about how the sound and pictures were recorded, I didn't see it recorded myself, but I have checked up with regard to our own engineers and with the Fox Company—

Mr. Ward: I object to that as hearsay.

The Court: That is all right; he answered, he said he didn't see it, but he checked it up.

Edward C. Wente—For Defendant—Recalled—Cross. 1093

The Witness: I did not see the positive film bearing the sound and pictures that the show was projected from.

I stated that in this theatre for that production they used Western Electric loud speakers, microphones and amplifiers for the recording. I have already stated that I did not see the recording, but I know that Fox Case under our license were using our equipment, as far as microphones and amplifiers was concerned, and 1094
that the installation at the Times Square Theatre was Western Electric installation. The Western Electric amplifiers and loud speakers, it is my understanding, were used there for reproduction. I do not know anything about a midnight demonstration given there before the show was thrown open.

XQ248. You wouldn't intend to contradict testimony given here that the first demonstration at that theatre did not have that Western Electric supplemental apparatus, would you? A. In the early part of 1927, I think— 1095

XQ249. In this same theatre. A. In this same theatre?

XQ250. Yes. At an earlier date?

XQ251. Yes. A. I do not know of any midnight demonstration.

XQ252. The first demonstration. A. I do not know anything about any midnight demonstration, no.

I was not at the Sam Harris Theatre.

XQ255. Now, I understood you to say that you did not see Dr. Engl in 1926, but you also say that you did not see any of his apparatus or

1096 *Edward C. Wente—For Defendant—Recalled—Cross.*

films at that time? A. I haven't stated in the testimony that I didn't see Dr. Engl. I did not see Dr. Engl in 1926. I have never seen any of his apparatus or any of his films. I don't know whether I have ever seen any of the Tri-Ergon patents until possibly a year ago, perhaps less. I don't remember ever seeing any of them.

As to whether I have read any publications in
1097 regard to the Tri-Ergon inventions, I have read —no—I may possibly at—no, none of the publications in regard to the Tri-Ergon inventions did I see, until, I should say, probably 1929 or something of that sort. I saw Engl's book for the first time, I think, perhaps about two years ago. I did not attend a convention in 1927 in Norfolk where Dr. Engl read a paper.

You ask if inventions are submitted to the Patent Department of the Bell Laboratories, whether it is customary for them to call me in to consider them; that would be very seldom
1098 that they would call me. I think I only know of two or three such cases. Normally, they would not come to me. They might come to my supervisor who might consult me about them.

XQ265. In the year 1925, did you hear anything around your department in regard to the Tri-Ergon inventions being submitted to the Western Electric or Bell Laboratories, in 1925, or any time? A. I don't know anything about that. They were never taken to me for inspection in any manner.

XQ268. As to your sound on disc system, which you say you got out commercially in 1925

to 1926, that was an improvement on the old Edison system that was put out by him about 1913 to 1915, was it not? A. Well, it was a sound on disc, and I think that 1913-1915, is probably a rather late date. I think from the very first of talking pictures, he tried to have a phonograph used with the pictures, from the earliest days of silent pictures. This sound on disc system with the pictures of ours, I think it is an improvement on that idea of Edison. There was no 1100
photographing recording of sound in our sound on disc system, that is in the simple disc system. Of course, in many cases at the present time, they do do both at once. In fact, in practically all—as far as I know, in all the film recording except news reel work, they do make a wax record at the same time. There is no photographic recording of sound in connection with our disc picture system when we do use a disc for the sound.

XQ272. I think Mr. Drake testified that as late as 1927, Western Electric and/or its subsidiaries 1101
had but two licensees. Now, at that time, did Western Electric or its subsidiaries have any patents on sound pictures, other than patents on amplifiers, microphones, loud speakers and such auxiliary apparatus as would have application to communication service? A. Of course, I don't have access to the patent—I mean, I do have access to the patent files, but I would not know of all the patents there might be. Of course, we did have a patent on the light valve, which is one of the elements you did not mention.

XQ273. What is the approximate width of the

1102 *Edward C. Wente—For Defendant—Recalled—Cross.*

fine slit used commercially through which the light traveling through the sound record is projected in reproducing sound? I would like to have the physical slit and then the width of the image of the slit in reproducing. A. My understanding is that it is two mils., two thousandths of an inch for the physical slit, and the projected image of the slit is approximately one-thousandth. That is about the standard for commer-
1103 cial practice. That is my understanding. That is what they used to use. That is what they used in the first installations and as far as I know that has not been changed yet, but it may have been.

XQ277. You have made, perhaps the majority of the contributions to the Western Electric group with respect to sound picture recording and reproducing, outside of what has been developed for communication service before Western Electric took up sound picture matters, have you not? A. I think I have stated pretty defi-
1104 nitely just what my contributions were. There are, of course, a great many other elements that have to be taken care of before a system, you might say, is functioning properly.

XQ278. You are perhaps one of the leading inventors in this particular art? A. That is, if you confine it to a certain period, let us say. During the period from 1920 to 1925, yes.

I testified at page 587 with regard to recording sound and pictures on different films that "Whether we were going to have pictures with it"—meaning the sound—"in what manner, whether on the same films or on different films,

that was thoroughly evident we had no concern with—" and at page 589 I made the following volunteered statement after I answered your question: "We did not actually go through any of the printing processes"—having reference to printing sound on pictures on the same film—"because that was thoroughly obvious and had nothing to do with getting"—those statements are correct. 1105

XQ281. When was this perfectly obvious? A. Well, in 1920, at any rate, we had considered the question of having the sound and picture record on a separate film for reproduction or on a single film. As far as the recording was concerned, we at all times felt that we should record separately and we always did so. 1106

XQ282. Well, was your statement intended to be one or not, that in your opinion this idea of taking on separate films the sound and picture and then printing them on one common film was perfectly obvious in 1920? A. Absolutely.

XQ283. Is it your custom when you file applications to read over your applications before you file them, the oath attached to the applications? A. Yes. 1107

XQ284. And is it your custom to colloborate with the patent attorneys of your company in the prosecution of the applications? If you get a rejection of your application, do they act on it as they see fit? A. I think they generally act on it as they see fit. I know some of my cases have been prosecuted in the Patent Office and that I really did not know anything about them and never found out just what took place as regards—

1108 *Edward C. Wente—For Defendant—Recalled—Cross.*

XQ286. But you do read the specifications and claims over? A. The original specification, yes; and I read my oath before I sign it.

My applications are assigned to Western Electric Company when filed.

You call my attention to a certified copy of a United States Letters Patent, No. 1,656,255, to Edward C. Wente, assigned to Western Electric Company, Inc., granted January 17, 1928, on an
1109 application filed April 8, 1924, entitled "Improvement in Talking Motion Picture Productions". I am the said Edward C. Wente.

The specification starts out with the statement that "This invention relates to the reproduction of variations of energy states, for example, the reproduction of changes of scene and concurrent variations of sound as instanced in the making of talking motion pictures." Then follows with certain statements of objects. One of these objects, "A further object is to obtain the desired contrast in the sound record on a posi-
1110 tive picture film without unduly limiting the control of contrast in the positive pictures."

Now another object, "Another object is to obtain a sound record on a positive picture film and yet permit the camera and the sound recorder employed in making the original sound and picture records to be moved about independently and also permit the same camera to be used without alteration for both talking and silent motion pictures.

"Another object is to obtain a sound record on a positive picture film and yet permit deletion of any portion of either the positive or the nega-

tive picture record without causing undue discordance between the pictures and sounds as finally reproduced.

"A still further object is to photographically print a negative picture record and a sound record onto a homogeneous record medium and yet permit independent control of the exposure of these records during the printing."

"In the embodiment of the invention specifically illustrated and described herein these various objects are obtained by recording the pictures and the sounds on two separate negative films." 1112

You direct my attention to original Claim 31. "A process of forming sound and motion picture records which consists of forming a photographic negative record of a changing scene, forming a photographic negative record of sound accompanying the scene, separately developing said records and thereafter printing said records on a single positive film."

As to whether in 1924, when I filed that application I was of the opinion that that was an obvious thing, yes, I was. 1113

XQ292. Notwithstanding you filed a claim for it and signed an oath swearing you were the original, first and sole inventor of that subject matter? A. Well, that patent application was written out on the basis of a memorandum which I submitted showing a method whereby you could run the sound record faster than the picture record, and subsequently printing the sound record down to a slower speed on a common film with the pictures. That is the only thing

1114 *Edward C. Wente—For Defendant—Recalled—Cross.*

that was in the memorandum that I considered original, and that is the memorandum that went to the patent attorney.

Now, if this particular claim—I had made no effort to make, I never supposed at any time, that this general problem of taking separately and printing at the same speed, that there was anything new in that, or I would have submitted it to the patent department, but they apparently
1115 broadened the claim to cover that.

XQ293. As a matter of fact, Doctor, there are a good many claims in this case that are not limited to that increase of speed idea, which you are correct is stated as a feature of the patent? A. As I say, this increased speed, if the patent solicitor has taken out of this, that this is broad enough to cover that, why, I do not see that, I wouldn't say it was new; I haven't searched the prior art, but I had never supposed that to be new.

XQ294. You told me that you read your speci-
1116 fication and claim before you signed your oath, and you have signed an oath here that you are the original, sole and first inventor. A. To the best of my knowledge. Of course, I cannot search all the prior art to see.

XQ296. To your best knowledge and belief you signed claim 31, didn't you in 1924? A. Well, I did sign the claim but I do not critically examine all the claims to see how they, I know the part that I submitted to the solicitor had nothing of that sort in it, it had only in it about the higher speed.

XQ298. I read you another extract from the specification: "For correct sound reproduction it

is important that the development of the positive and negative be so carried out that the transmission of the positive is at every point proportional to the exposure of the negative. This is in general not the best condition for the pictures as under these circumstances they will usually be too harsh. In the system here proposed the picture negative and positive can be developed to give the most pleasing results for pictures, and yet the negative of the sound rec- 1118
ord can be so developed that when it is printed on the picture positive film, the required contrast is obtained in the positive sound record."

Has that statement got anything to do with the additional speed of your positive? A. Well, I do not know just how that comes into the general context of it.

XQ299. Here is the patent. I think I read from page 3, the second column, starting at line 70, down to line 85. A. But in the next paragraph—let me see. Well, that does describe, if this method is used, that you can obtain these results. 1119
I may have—I haven't, of course, this application. When I sign the application, I do not strike anything out unless it is obviously wrong.

XQ301. Well, the statement that I just read to you there is a correct statement of fact, is it not? A. That is a correct statement—now, a correct statement of fact, that is a different question. It says, "Under the circumstances, the picture will usually be too harsh—"

That is on line 76: "This is in general not the best condition for the pictures as under these circumstances they will usually be too harsh." That would indicate that the contrast in the fig-

ures would be too high, in other words, that the pictures would have to be developed to a lower contrast. That I do not understand is correct. I understand that is not right.

XQ304. That is not correct today from the information that you now have, is that right? A. That is, from the information I have gathered from this testimony here anyway. As far as I knew it was correct as far as concerned the in-
1121 formation I had in 1924. I apparently was under that general impression, why, I do not know.

XQ306. I read you another statement from your specification, page 4 of the printed patent, line 5:

> "Due to variations in lighting conditions and in the character of the objects being photographed, motion picture negatives may vary greatly in density throughout the length of a single roll of film. It is customary to correct for this by varying
> 1122 the intensity of the light used for making positive records from the negatives. Sound records on negative films, on the other hand, may be produced under more easily controllable conditions, so that usually no such correction is required or desirable, or if required, the correction will be different from that of the corresponding portion of the picture record. In accordance with this invention a separate lighting means is used for the picture and sound records, respectively, during the printing."

Is that correct? A. That was correct, as of that date, to the best of my knowledge.

Edward C. Wente—For Defendant—Recalled—Re-direct. 1123

Mr. Ward: I offer in evidence as Plaintiff's Exhibit 28, the file wrapper of Dr. Wente's patent, which he has testified about. Also the references therein cited.

(File wrapper and references marked Plaintiff's Exhibits 28, 28-A, 28-B, etc.)

XQ307. Doctor, does the copy of the patent I show you correctly indicate in Fig. 3, the separate sound and picture records that you said 1124
you worked on in 1922 and 1923? A. Yes, I think it does.

Mr. Ward: I offer in evidence the patent shown the witness filed by T. J. Engel and assigned to Western Electric Company No. 1,654,926, issued January 3, 1928, on an application filed October 2, 1923.

The Witness: I have never seen this one before.

(Marked Plaintiff's Exhibit 29 in evidence.) 1125

Re-direct Examination by Mr. Ashton:

RDQ309. Will you state what you understand to be the advantages of using two films in reproducing, as compared with a single film, for example? A. In using two films in reproducing, it is possible to get improved sound quality because you can use a wider sound record, which means that the ratio of signal to ground noise is higher, and if you have a separate reproduction, your sound record is not subjected to the intermittent motion that the picture record is, and you thus

have less wear of the sound record, introducing less scratches and surface noise, and also the strain on the film is less, so that the film producers would possibly be capable of producing better film for sound purposes, and they might have film that might have less strength, but that could be sacrificed in the interests of film which would give less noise.

RDQ310. You testified regarding the use of
1127 such double film reproducing systems in the studios, I believe, at Hollywood. What are those two film reproducing machines used for in the motion picture studios? A. They are used in the theatres that the producers have where the pictures are taken and in which—for instance, they take pictures and record sound during the day, and then in the evening, they call them rushes, and they take them over to the theatre and they project the picture and the sound record there for general inspection to see whether the photography or sound recording or the general scenic
1128 effects are what they would want. Then, also, after they have approved the takes, they will afterwards project them again separately with those machines and do the editing in that manner.

RDQ312. Have you ascertained the approximate number of studios that these machines are used in? A. Well, some of these companies have several studios, but they are in the number of 25 actual studio theatres.

RDQ313. Mr. Ward asked you, Dr. Wente, whether you had seen any of Dr. Engl's publications, I believe, and you stated that you had recently seen some of them and as long ago as two years you had seen Dr. Engl's book. Do you

know what the width of the sound track was that was referred to at any time by Dr. Engl? A. From the picture of his—I mean from the reproduction in his publications of the picture and the sound track, if you scale that off, it is about 80 mills, eighty thousandths of an inch.

Mr. Ward: I object to that testimony as wholly immaterial and irrelevant.

The Witness: The article gives 2 millimeters in some of the other publications, 1130 but in this book, I am not sure, but I remember scaling it off, and that is about—it is 2 millimeters published somewhere, and that is in agreement with the—it is quite possible, however, to scale that off. It is a perfectly proper accurate way of doing it.

RDQ316. Will you state what you consider your particular contribution in the construction of the condenser microphone which was adopted for talking motion pictures? A. The principal 1131 element is the method of air damping that is applied to the diaphragm by a very close spacing of the back plate and the proper proportion, and in the microphone as it is developed at the present time Dr. Crandall made a thorough study of that phase of it and made some important contributions, and this air damping principle was applied subsequently to the high quality carbon microphones wherever that instrument was used and in place of the condenser microphone such as in some of the broadcasting studios.

1132 *Edward C. Wente—For Defendant—Recalled—Re-direct.*

Regarding the relation between the Research Department and the Apparatus Development Department of the Bell Laboratories. The two departments, the difference is mainly a functional difference. In the Research Department, the fundamental aspects of various problems are studied, and very often studies are carried out to see whether certain things may possibly have some commercial applications. But in the Ap-
1133 paratus Development Department, the subjects are studied more from the standpoint of the practical application and the design of apparatus in such a form that it can be manufactured and will be serviceable and reliable.

In this country the commercialization of sound pictures began I should say from the Vitaphone in August, 1926, because it is from that date that talking pictures have been shown uninterruptedly until the present time where practically all motion pictures are of the sound picture variety.

RDQ319. In your opinion, would sound pic-
1134 tures have been successful commercially without the developments to which you have referred of the Western Electric Company?

Mr. Ward: I object to that. I don't think the witness is capable of answering that.

Mr. Ashton: He is qualified as an expert.

The Court: We are going into a pretty broad field, are we not?

A. No, I think not, unless similar developments had been made somewhere else.

Edward C. Wente—For Defendant—Recalled—Re-cross. 1135

RDQ320. Had any such development been made at the time that the Western Electric system was introduced? A. No.

Re-cross Examination by Mr. Ward:

By the "Western Electric system" in the general discussion here, I meant the system that is supplied by the Western Electric Company to motion picture producers. That may be tons of steel and copper and what-not. The light valve 1136
for recording. That is one of them. Amplifiers, microphones. Of course, on the sound-on-disc system, those earlier developments—

RXQ325. Suppose we confine ourselves to this question to sound-on-film. A. The Fox Case system does use the Aeo light. In every other respect, it uses the same general system, I think, although at one time they did use their own machines for driving—not the motors or the interlock, but the particular mechanism through which the—the coil which controls the motion of the 1137
film.

The so-called Western Electric system uses a motion picture camera made by various manufacturers. Not by ourselves.

RXQ329. Uses a sound head attachment made by whom? A. Are you talking about recording?

RXQ331. I will have to change my question: Do you use separate machines? A. Separate machines for recording. We use in reproducing the photo-electric cell.

RXQ333. Your company does not hold a patent for the use of the photo-electric cell for use in reproducing, does it? A. I don't know wheth-

1138 *Edward C. Wente—For Defendant—Recalled—Re-cross.*

er they hold any patents or not. I know they have made very great improvements in the use of the photo-electric cell.

RXQ334. You know they don't hold a patent for the use of the photo-electric cell for sound reproducing, do you not? A. I don't know anything about the patents. I should not think they would hold a patent on a photo-electric cell for sound reproducing—I am sure they don't hold
1139 any patent on that.

RXQ336. Do you know that the District of Columbia Court has recently held that the Tri-Ergon Company, or the American Tri-Ergon Company—

A. I believe that is right. I have seen some of the opinion.

RXQ337. And outside of the light valve, and the loud speakers and microphones which are what I call supplemental apparatus, what is the characteristic, what are some of the other characteristics features of this so-called Western
1140 Electric System? A. Well, most of the characteristic features are embodied in these so-called supplemental devices, which you referred to.

RXQ339. You have given a few advantages of the use of separate sound and picture films. Now, perhaps you can tell us some disadvantages. Disadvantages of having two separate films for reproduction? A. Just for the reproducing, the single separate films as over against a composite. Of course, from the standpoint of quality, there is no disadvantage. The advantage lies in the fact that if you use one film it costs less than two films, and the space that is required in

the projection room is less because you can run it through one projector.

RXQ345. Separate film reproducing requires two machines instead of one, one for the pictures and one for the sound? A. Of course, when you have the common, you have to have—you might say you put the two machines in series, and when you have separate, you put the two machines in parallel—the cost is less where you have the single film. And, of course, the cost of the film itself is approximately one-half 1142
with the single film.

RXQ349. I take it, you agree with me that the idea of using a single film as a positive film for the sound and pictures, far outweighs the disadvantages? A. My personal opinion is that it does not.

RXQ350. Technically or practically? A. Practically, yes; I mean, practically, because I would rather have good sound quality than sacrifice that for practical gain.

I stated that the date from which the com- 1143
mercialization of sound pictures began in this country was when we put out the sound on disc system. In giving that statement, I do not overlook Dr. DeForest's demonstrations in this country in theatres, around 1923 and 1924, for a while, I am not overlooking Edison or Messer or a whole series of exhibitors in times past. As to the Deforest's, I don't know that they were commercially put out in theatres. I know that they were a novelty, and I heard one of them that I was sure, if the rest of them were like that, they would not stay very long, and just how

1144 *Edward C. Wente—For Defendant—Recalled—Re-cross.*

long the installations and pictures were shown I don't know. But I know they were not being shown in 1926. I should say they were tremendously worse than our disc record system when we first put it out in 1927.

Of course, I did not hear all the films that were exhibited, but the particular one that I heard, did not compare with it in any way.

RXQ356. How well is that sound on disc sys-
1145 tem of yours getting along today? A. Well, I think possibly that the finest sound production today is obtained from these discs. I mean commercially, I don't know whether they are actually being shown in the theatres, but they have been demonstrated, and they are being put into commercial production, as I understand it, by the producers.

RXQ358. Is it not a fact that they are being very rapidly and have for some time been rapidly replaced by the sound on film system? A. I think at one time that the sound on disc system
1146 was ahead of the film, and the film did gradually come ahead of the disc, but I think that it is not at all unlikely that the disc, as far as quality is concerned, has been able to hold its own. When the finest quality is desired, I believe the disc will be used.

You say I am correct in saying that when our disc system was first put out, it was by far the largest used system, because that was the system we first put out, and we pushed it. I don't know anything about that. How would I know whether we pushed it. It is not my field. It would be just hearsay.

RXQ360. It was the first one and it had been in extensive use? A. It went in extensive use, yes.

RXQ361. Then you came along with the sound on film system, and the fact is that the sound on disc system is giving way, and today you have relatively few of them out as contrasted to the number of sound on film system? A. I don't know. I think there are more sound on disc than sound on film, because there are a great many theatres that have sound on disc in 1148 use, and they have no facilities for sound on film. That is my information.

RXQ362. Why is it that the small theatres keep on using them and the big theatres do not to the same extent? A. As a guess from the commercial standpoint, the disc, I think, is probably cheaper.

Mr. Ashton: I would like to ask Mr. Ward if he will stipulate into the record the original claims of the Craig patent here relied on, namely No. 1,260,337, which 1149 was filed May 6, 1913.

Mr. Ward: I object, anything said about Craig in the Patent Office is wholly irrelevant and immaterial here; it can't be a part of a reference or a citation of anything.

Mr. Ashton: That is not true, your Honor.

The Court: The patent is in evidence.

Mr. Ashton: But the file history isn't, and yesterday Mr. Ward asked Mr. Jones to refer to the claims of the Craig patent,

and asked him whether they weren't all limited to this feature which he says Craig was most concerned about. This shows that Craig in 1913 claimed this composite film, which Mr. Ward is claiming is the invention here in suit, and that claim was rejected on the Haines patent, which was applied for in England in 1906.

Mr. Ward: In the first place, I disagree with Mr. Ashton's statement that what we claim is a composite film. In the second place, he knows I referred his expert, Mr. Jones, to those claims for the purpose, and only for the purpose of checking him up on his interpretation of that claim. I asked him where he got the basis for his contention that there was any such interpretation as he put on it, and those claims were read to him to show that they related to overlying, only. Mr. Jones had expressed an interpretation of the Craig patent which was different than that, and he expressed it from the patent that he had.

Mr. Ashton: I think we are entitled to it in view of his cross examination.

Mr. Ward: That was not available to the witness, should not have been available to the witness, he should have based his interpretation solely upon the patent which was in evidence, and my question was based on an interpretation of that patent put in evidence.

Mr. Ashton: It has a direct bearing. I would like to make this very clear: The

1153

Patent Office expressed doubt during the appeal from Claim 1 in the interference in this case, as to any invention being involved in this subject matter, but allowed the claim in view of the existence of the DeForest patent, the interfering patent.

Now, the file history of this prosecution shows that it was because of this patent, Here the Patent Office back in 1913 had rejected this claim for a composite print, having in mind Craig's separate recording, 1154
his separate developing and his printing on the same film.

Mr. Ward: I do not see that it has anything to do with it, that what Mr. Ashton has said, has any relevancy to the situation.

The Court: Mr. Ashton asked you to concede something. It isn't before me. It is argument between counsel.

Mr. Ward: No, he is trying to offer it in evidence, and I will not stipulate anything about it. It is so irrelevant and im- 1155
material. I object to this thing being put in evidence.

The Court: You offer it in evidence now?

Mr. Ashton: Yes.

The Court: I will take it and look at it; I do not know what there is about it. If it isn't material, I will not consider it, if it is, I will.

Mr. Ward: May I have an exception?

The Court: Certainly.

(Marked Defendant's Exhibit Q in evidence.)

1156 *Lloyd A. Jones—For Defendant—Recalled—Cross.*

Mr. Ashton: The reference referred to in the file history is the Haines patent; it is attached to it. I offer that.

(Marked Defendant's Exhibit Q-1 in evidence.)

LLOYD A. JONES, recalled.

1157 *Direct Examination by Mr. Ashton:*

I will read a question which I wish to correct. On page 433 of the record, XQ599: "Then in Defendant's process, to cure the difficulty arising from using different lighting conditions in photographing the picture and sound negatives, the defendant uses different film stock for the sound and picture negatives and separate development treatments: is that right?" I quite misunderstood the import of that question which implies
1158 that the positive and negative stock, or rather the positive stock is used on account of a lighting condition of recording. That is not the case. The positive stock is used on account of its characteristics of fine grain, high resolution for the better rendition of the sound record.

Cross Examination by Mr. Ward:

XQ860. Now, Mr. Jones, when I put that question to you yesterday, you recall taking your time about answering it, don't you? A. No, frankly, I do not, I do not remember all the details.

Lloyd A. Jones—For Defendant—Recalled—Cross. 1159

XQ861. Tell me who called your attention to this question since you left the stand. A. I noted it in reading over the testimony myself.

XQ862. What do you find wrong with your answer yesterday on account of the question exactly? A. That answer would imply that I agree with the implication in the question that the positive stock is used as a result of the lighting conditions existing in recording.

XQ864. Is your interpretation, interference, in 1160
that, comparable with the inference you drew from the quoted clause in the Craig patent? A. Well, I do not remember that quoted clause.

XQ865. Well, will you read that question and see if you find in it any statement that the sound positive stock was selected on account of lighting conditions? Doesn't the question state on account of lighting conditions the defendant uses different film stock for sound and picture negatives? A. Yes, on account of lighting conditions.

XQ866. Might not that be the selection of the negative stock on account of the lighting condi- 1161
tions, yes or no? A. I do not understand the import or what the meaning of that is. To me the question definitely implies that the positive stock is used because of the lighting conditions in making the sound record. Now, that is not the case.

XQ867. Nobody has said it was. A. That is the thing I wanted to correct.

XQ868. Nobody ever said it was. Didn't you testify that the positive stock was used because of its fine grain, but that the positive stock was not suitable for the negative picture record on

account of its slowness, and that it would be over—or under-exposed if it was used for that purpose? Do you remember giving that testimony? A. I testified to that, and I also at the same time said that there were other considerations which would make positive stock unsuitable for recording pictures.

XQ869. All right, then. If the negative stock is used because of lighting conditions and the
1163 positive stock is used for any condition or reason you see fit to give it, this question and answer of yours are correct, are they not? A. Well, in the first place, the wording "difficulties arising from the use of different lighting conditions," if there were any difficulties arising from a difference in the lighting conditions, for instance, if we had too much light in recording the positive, the sound record on positive, or on the negative film or on any film, it would be very simple to cure that difficulty by using a lamp of lower intensity. You do not have to use dif-
1164 ferent film to cure that difficulty.

XQ870. Do you want to correct your answers to the few previous questions to have them jibe up with the correction of the one you wanted to correct? Look at XQ595; do you want to change that one? If you do not want to change that, why do you want to change XQ599? A. As far as I can see, the answers to the questions you have mentioned are correct, while the answer to this question is not correct and it is not in accordance with the things I have previously stated about why positive and negative films are used.

XQ871. Do you find any statement in my question XQ599 that the positive stock is selected on

account of lighting conditions rather than the negative stock may have been selected because of lack of lighting conditions under defendant's system as testified to in XQ595? A. I can only say this: I feel that the answer to the question 599 which I gave yesterday was incorrect, and I wanted to correct it.

Mr. Ashton: I wish to state also for the purpose of the record that the Tri-Ergon 1166
application for photo-electric cell referred to by Mr. Ward as the subject matter of an opinion in the District of Columbia has not yet issued, but is in interference.

Mr. Ward: I said that in my opening.

Mr. Ashton: The defendants rests, your Honor.

WILLIAM C. BALLARD, JR., recalled in rebuttal, testified as follows: 1167

Direct Examination by Mr. Ward:

Q298. Professor Ballard, will you take the Greensfelder patent No. 1,254,684, set up by the defendant and explain it to the Court, or such parts of it as you think are necessary to have him understand it? A. This Greensfelder patent was issued for a method and apparatus for synchronously producing sounds to accompany motion pictures.

The specifications beginning at line 10, page 1, state: "The present invention relates to an im-

proved method of producing different sounds during the projection of motion pictures upon the object screen."

At line 21: "Unusual sounds, such as the report of a gun, the shriek of a whistle, the clatter of horses' feet, the cry of a child, the ringing of a bell, etc., all of which add greatly to the vividness of the scene, are generally assigned to one of the men in the orchestra to be reproduced as
1169 nearly in synchronism with the corresponding action in the picture as possible.

"The object of the present invention is to provide an improved method whereby these various supplemental sounds, or even the piano accompaniment will be produced by the various instruments in exact synchronism with the reproduction on the picture screen of the scene of which they are illustrative.

"The invention consists in providing a system of control for these several instruments which will be automatically operated by the picture film
1170 itself."

Skipping down to line 50: "The lines may each represent one note of a piano (in the case of a piano record), while others may represent an expression lever, a sustaining pedal, or the operating mechanisms, or instrumentalities for beating a drum, ringing a bell, blowing a whistle or producing like noises. The light from the motion picture machine passes through these transparent 'sound marks' as the film is being shown on the screen. These light rays are intercepted between the lens of the machine and the screen, or at the screen, and caused to fall upon a series of exposed, separate selenium cells. An individ-

ual selenium cell is provided for each 'sound mark' of the film and each ray of light is directed by a system of slots and guides to exactly register with its corresponding cell. These cells are in turn each connected with a separate relay, electric battery and electro-magnet, the latter being so placed as to mechanically operate the sound instrumentality upon its becoming energized."

Then, after a general discussion of some of the 1172
principles involved, I skip to page 2, beginning at line 90: "Each particular 'sound mark' 3 on the film has a corresponding selenium cell 11 on the shelf 9, upon which it is adapted to impinge a ray of light as it passes between the light source and the lens of the projecting machine. When, for example, it is desired to apply the invention for the purpose of operating a player piano 88 'sound marks' 3 are provided, one for each note of the piano and additional 'sound marks' for expression levers."

The method of photographing these sound 1173
marks is next explained in detail, and skipping to page 3, beginning line 52:

> "By way of illustration, Figs. 7 and 8 show the manner of photographing the 'sound marks' to record the notes of music played upon a piano. Each key 17 or expression pedal 18 of a piano 20, or other instrument the sound of which is to be recorded, operates a hammer 21, or corresponding part of another instrument, and at the same time moves a rod 22, which in this case is moved vertically. At the upper

end of the rod 22 a plate 23 is carried, provided with blind or shutter part 24 and a corresponding opening 25 located immediately below the same. The plate 23 is adapted to normally remain in its lowered position with the shutter 24 intercepting the rays of light from any suitable source L, and preventing them from registering with an aperture 26 formed in a horizontal shelf 27."

Skipping to line 92, the same page:

"In order to secure the best results it has been found advisable to have a motion picture positive properly pieced and joined so as to be ready for projecting and exhibiting before recording on the film in camera 28 the rows of 'sound marks' that are to accompany the animated picture. This positive should contain on it blank spaces in the position of 3, Fig. 1."

I might state here that that is an obvious error, that it should be Fig. 3.

Q288a. That is in every day parlance, what he is referring to there is the idea of first simply taking a picture of the scene and developing that negative of that picture without any reference to sound, and then taking the positive of it and projecting it, and then he proposes, as that positive is projected on a screen to have some person or persons make some noises, or musical instruments, which he proposes to register or record, is that right? A. That is correct. These

noises are recorded on the film by opening various blinds or shutters referred to as part 24, and allowing light from some other source to fall through the lens of the recording camera.

Q299. And is the apparatus for letting that light fall onto the film shown in Fig. 7? A. It is.

Q300. And we had some discussion yesterday during Dr. Jones' testimony about what that light passed through. Are the openings that the light rays pass through shown in Fig. 8, the 1178
openings being 25 of the bars 23? A. Yes. When the opening 25 is raised so that it coincides with the opening 26, then the light may pass through and register on the film.

For illustrative purposes in the drawing, that opening, the two openings are in register at 26 in the middle of Fig. 8:

> "On the completed positive ready for the market these blank spaces will be filled in by rows of sound marks and the spaces for the pictures by the pictures, which can be effected by such a method as print- 1179
> ing the positive from the two superimposed negatives, as will be hereinafter described. The pianist or musician, who is to play the accompaniment to be recorded for the picture, watches the positive picture as it is projected on the screen before him from a motion picture apparatus at a definite speed. After he has become familiar with the picture, the positive is again projected through the motion picture apparatus and he then plays the accompaniment to the picture, introducing

whatever melodies, chords, compositions or sound effects he thinks appropriate to the action of the objects or characters in the picture."

The description so far is devoted to the general principles of operation of this patent, and there are several different types of record which may be produced by the apparatus shown. On
1181 page 4, beginning line 9, the picture player type or perforated record, the counterpart of that type of record, rather, is described. That is the second suggested process now that I am coming to.

Q304. Will you point out where in the patent a record is shown according to his first suggested process? A. According to the first, the record according to the first suggested process is indicated in Fig. 3. And the sound marks are arranged in a horizontal row alternating between the successive picture records or picture frames.
1182 In further describing the picture player type of record, he says, "Another method by which these rows of 'sound marks' 3 may be recorded so as to appear as shown in Fig. 3, is by making a marked or perforated roll of the music and sounds, such as is used in player pianos, and automatic musical instruments. This roll is then moved in the direction of its length at the proper speed and is photographed through a slit by a motion picture camera, on the film of which the spaces for the pictures are not exposed to the light."

This is the record, this still refers to the type of record exhibited in Fig. 3.

The patentee further describes a method of producing a continuous record on which these sound marks are shown as illustrated in Fig. 4, beginning page 5, line 13— I am not coming to the third suggested method.

Q309. The second one that you described just now, as I understand it, was the idea of putting the horizontal rows of sound marks alternating with pictures by means of using a perforated music roll for the recording of the sound marks, 1184 rather than shunting the light through the bars attached to the piano, is that right? A. That is my understanding.

Beginning now, page 5, line 13:

> "The method in which the 'sound marks' are photographed on a separate film adapted to be continuously driven and geared to the sprocket turning the picture film will next be described. As shown in Fig. 4, a separate film 29 is used for the 'sound marks' and instead of having them formed in rows between the pictures, as 1185 described in connection with Figs. 1 to 3, the marks for each note, expression element or sound instrument are continuous."

Then, skipping down to line 32 on the same page:

> "This sound film 29 can be photographed from an operating piano or mechanism."

Skipping to line 42, on the same page:

> "As described in connection with the method illustrated in Figs. 1 to 3 and 7

1186 *William C. Ballard, Jr.—For Plaintiff—Rebuttal—Direct.*

> and 8, this film may be made by first making a perforated roll of the sound accompaniment such as is used for player pianos and then while this roll is moving in the direction of its length and at the proper speed, photographing it through a slit by a motion picture camera from which the shutter and intermittent sprocket mechanism have been removed."

1187 These last two quotations show two different methods of making the piano player type or sound marks as shown at the right hand side of Fig. 4.

A fourth method in reference to Figs. 5 and 6 is described, beginning at line 108, page 5:

> "Referring to Figs. 5 and 6, the invention is shown as applied to a film of double width, one-half of which contains the pictures 38 while the other half contains the 'sound marks' 3^2 formed similarly to those
1188 illustrated and described in connection with Fig. 4."

Skipping to line 128, the same page:

> "A convenient way to obtain the film 40 is to first photograph a negative of the original sound film and place it side by side with a finished and pieced negative of the corresponding picture film, then, from the two print a one piece double width positive, such as shown in Fig. 5."

Fig. 5 is referred to in this last statement.

1189

Q314. And what is the character of the sound record—by "sound record" I mean the sound record that he talks about—that is shown there in Fig. 5? A. It is a continuous type of record as compared to the intermittent type of record illustrated in Fig. 3.

As shown in Fig. 5, the sound record is a negative record. The picture record is a positive record.

Q317. Where do you get that from? A. The description of the manufacture of this record is 1190
quite clear and is described, beginning line 128, page 5:

> "A convenient way to obtain the film 40 is to first photograph a negative of the original sound film and place it side by side with a finished and pieced negative of the corresponding picture film, then from the two print a one piece double width positive, such as shown in Fig. 5."

I think it is an obvious matter that when a 1191
negative is made of a negative, a positive is produced, and by printing from a positive to form the final object, a negative record is produced for the sound marks and a positive record for the picture sequence, as illustrated in Fig. 5.

This is further borne out by the fact that the operation of the apparatus in Fig. 1 requires the light to be eliminated from the selenium cell on shelf 9 before the magnet 16 is energized and the piano note struck—

Q318. Fig. 1 illustrates the system for reproducing the sound under this proposed system, is

1192 that right? A. Reproducing the sound from these marks. As I stated before, when the light is interrupted on the selenium cell 11 located on the shelf 9 of Fig. 1, the relay 14 drops the armature and closes the contact, allowing the battery 15 to energize the magnet 16 and depress the key 17, striking the note on the piano or beating the bass drum or causing the shriek of the child or action of a whistle, or whatever happens to be
1193 connected with this mechanism.

Q320. Now, what condition of the film is necessary to shut off the light, in other words, does the shutting off of the light from that selenium cell require a transparent opening or section or an opaque section? A. It requires a corresponding opaque section on the film.

Q321. So that according to this figure 1, in addition to the description you have read, it is an opaque mark which would shut off the light from the selenium cell and cause the piano key to be struck? A. That is true. And I may add that
1194 the patentee has described the method in detail of producing such a record as would satisfy this condition.

Q322. Would you say that in your opinion the method of producing the picture record and sound mark record of this patent is the same or different from that of the patent in suit and the defendant's? A. It is different from both the patent in suit and that of the defendant.

Q323. Did you hear Mr. Jones' testimony here at page 320 with reference to forced developing, I believe he called it, causing an undue spread of the image of these sound marks of Greensfelder? I hand you that testimony. You will find it in

Q186, answer to Q186 and 187 and 188. (Handing to witness.) A. I did. I do not agree with him. I have seen many thousands of feet of film produced by the single film process in which both picture and sound negative records were made on a single film and printed onto a single positive film, and in which the sound record—the true sound record on this type of film consists of a succession of fine lines, and in no case were there any indications that these fine lines were 1196 unduly spread by the proper development accorded to the picture sequence.

Q326. And these fine lines were finer or coarser than the proposed Greensfelder lines? A. In many cases, much finer than those proposed by Greensfelder.

Q327. What have you got to say with respect to the width of a slit through which light may be projected to operate a selenium cell? A. The width of the illuminated area of the film in most systems of sound reproduction today—and I think this is true in the case of the Western Elec- 1197 tric system—has an effective width of approximately one-one thousandth of an inch, and it is obvious that the light to operate the sound-translating mechanism must pass through this restricted area. If the selenium cell were used, as I understand it has been used, I have seen them in operation, the light would, of course, have to come through this restricted area.

Q328. Then, with regard to the present sound recording practice, it is the width of this slit as photographed that determines the width of the line on the film, I mean the width of the beam of light which will show on the selenium cell, is

1198 that right? A. It shows that a line at least as fine as 1/1000 of an inch might be used for reproduction.

Q329. Then, the testimony Mr. Jones gave when he was recalled to the stand yesterday afternoon that the number of lines per unit of length, I think it was an inch, was about 250 rather than 1,000, is not the controlling factor here, is it? A. I think his testimony was correct,
1199 but that it did not apply to the case which you had in mind.

Q330. I say, it was not the controlling factor? A. It was not the controlling factor because a line several thousandths of an inch in width, of course, cannot possibly be completely behind the opening at any one instant of time.

Q331. Then, we get back to the point that the minimum width necessary or the width necessary could be about 1/1000 of an inch for the opening? A. I should think that is a fair statement.

Q332. And that contrasts with the Greens-
1200 felder situation of 88 lines across the film? A. That is true. That would allow approximately a space of 12/1000 of an inch for each note on the piano.

Q333. That is, in Greensfelder he would have a space of 12/1000 for each note on the piano? A. Yes, that is approximately true.

Q334. Now, what would the degree of spread for forced development have to be to have those lines interfere with each other? A. They would have to be increased in width by at least twelve times.

Q335. Did you ever hear of any photographic process where the width of a line merely by

forced developing would be increased or had been increased twelve times its original width? A. I know of no such process.

Q336. What would be the result of the pictures on any film in which that took place? A. They would be hardly acceptable.

Q337. I refer you to Fig. 12 of the Greensfelder patent, and ask you what that shows and whether that has any bearing on this point? A. Fig. 12 is referred to in line 85, page 2, and is 1202 described as: "A slotted screen or grating 12 may be properly positioned in front of the shelf 9 for the purpose of reducing the magnified light rays coming from the 'sound marks' and preventing overlapping of the rays on the selenium surfaces".

It can be seen from reference to this drawing that the space between the openings is at least as large, if not larger than the space occupied by the openings themselves. This would effectively prevent the effect of the spreading of the sound marks due to undue forced development. 1203

Q338. Then, in your opinion, there is nothing to Mr. Jones' theory or statements about the spreading of these sound marks making it advisable to separately develop the Greensfelder picture record and sound record? A. That is true.

Q339. Do you find any reason for separately developing the Greensfelder sound marks and picture records, so far as concerns the character of the result in the pictures or the sound marks? A. I find no such reason.

Q340. In Greensfelder the sound marks are not made simultaneously with the picture, but

as I understand it, the picture film is first made and developed and then the sound marks are recorded or scored during a projection of the picture from the already made positive picture film, is that right? A. That is the case as described in the patent specification.

Q341. And it is because of that fact, that they are developed separately because one must be made ahead of the other? A. Yes.

1205 Q342. Does the Greensfelder patent teach anything at all with regard to the recording of acoustic vibrations? A. It does not.

Q343. I refer you to the Bullis patent and will ask you if you will explain to the Court what is disclosed in that patent? A. This patent, Bullis No. 1,335,651, discloses a method for producing talking picture apparatus in which the sound and picture are recorded separately on two separate lengths of films, given the necessary development process, and from these two individual lengths of negative record, two corre-

1206 sponding individual lengths of positive record are produced. These two positive films then may be reproduced in the manner shown in Fig. 9, either cemented together or allowed to remain entirely separate.

Bullis shows a special feature to enable subsequent matching of the films, in order to obtain synchronism in reproduction and obtains a series of corresponding marks by using a third film at the time in which the sound and picture are recorded. The third film overlaps the edges of the other unexposed films, and passing before an opening, exposes the edges of these two films

and prints on them corresponding numbers for the purpose mentioned previously.

Q344. Does Bullis show or teach the printing of the picture record and the sound record on the same positive film? A. Nowheres in the patent is any suggestion of this process given. In fact, Bullis very definitely describes what he considers as the impossibility of doing this action. I refer now to line 28, page 1:

> "Further objects of the invention are 1208
> to provide a device of this character which is comparatively simple and inexpensive in its construction, which admits of different emulsions and different treatments, being employed in making the picture record and sound record, which provides corresponding identification marks upon the picture record and sound record so that there will be no difficulty in assembling the two records in the proper relation for the reproducing operation." 1209

It is evident that in this citation, the two "records" refer to the positive sound and picture film.

Again, on page 4, beginning line 37:

> "The corresponding identification characters 10^a and 11^a on the respective films indicate corresponding portions of the picture record and sound record, so that there is no difficulty in arranging the films for a synchronous reproduction of the pictures and sounds."

Here again the term "picture record" and "sound record" refer unmistakably to the positive films.

Line 78, page 4, states:

> "The sound record employed for reproducing purposes is made by contact printing from the master sound record film, and it will accordingly be obvious that in
1211 the reproducing sound record the loud sounds are represented by light or partially transparent," and so forth.

It is clear in this connection that the word "record" refers definitely to the positive film.

On line 94:

> "the two records have been completed by the special individual handling or treatment necessary to the best results for each record, they can be readily assembled in
1212 the proper relation to produce a synchronous reproduction of the pictures and sounds."

The use of the term "record" in this case definitely refers to the positive film.

When Bullis describes the process through which these records are to be put, he says, beginning page 2, line 1:

> "Where the two records are made upon the same film, using the same emulsion, it must be obvious that a proper treatment or development of one record can only be

obtained at the sacrifice of the other record, since the special form of development required to get the best results from the two records would ordinarily be quite different. It will thus be seen that there are very important practical reasons why the two records cannot be successfully and satisfactorily made upon the same film, as has been previously proposed, and it is the object of the present invention to over- 1214
come this particular objection, by providing a construction which admits of the records being made upon different films, which may have different emulsions and may be individually treated in the development exactly as may be required to produce the best results. These two independent films have corresponding identification marks made upon the same at the time the records are made, so that they can be assembled without difficulty in the proper manner necessary for a synchro- 1215
nous reproduction of the pictures and sounds."

From what has gone before, it is quite obvious that Bullis is referring to both positive and negative records.

Q345. Do the claims shed any light on that subject? A. Claim 1 at line 110 refers to the "two records to facilitate assembly for a synchronous reproduction".

Claim 2 speaks of "a series of corresponding identification marks upon the films to facilitate assembly for a synchronous reproduction".

1216 *William C. Ballard, Jr.—For Plaintiff—Rebuttal—Direct.*

Claim 3 contains the statement: "to facilitate assembly for a synchronous reproduction".

Claim 4 refers to the negative record only.

Claim 5 refers to negative records only. The same is true of claim 6. The same of claim 7—

Q346. I think that will be enough to illustrate the purpose. I refer you to page 4 of the Bullis specification, the statement commencing in line 57, and ask you to read that statement and state
1217 what you understand by it. A. "The picture film 10 and sound film 11 may either be kept separate and distinct from each other, or the overlapping edges thereof may be cemented together so as to produce in effect a single film".

Q346a. Do you understand that to mean that the sound and picture records are to be printed on the same film? A. It clearly does not state that, and points away from that idea by the words "in effect a single film".

Q347. Can you state what the disadvantages of the Bullis system are? A. In the production
1218 of positive films the usual practice is to supply the exhibitor with lengths of approximately 1000 feet or similar values. It is well known in the art that motion picture films shrink and expand, due to different treatments, one of which is the amount of moisture which may be contained in the film, ageing of green film, and other effects. If it were attempted to glue two one-thousand feet lengths together, unless the film were of exactly the same characteristic, which would be extremely difficult, if not impossible, to obtain, it would not be very long before the corresponding perforations would be out of line with one an-

other and the film would mount the sprocket and become damaged.

From a practical standpoint, there would be considerable commercial difficulty in scraping off the emulsion from one film and cementing these two lengths together, which would add greatly to the cost.

If one film should expand or contract more than the other, there would be a tendency for buckling of the film. 1220

A combined film would obviously require cans for shipment of approximately twice the size of a single film for a given length of picture film; and particularly in the case where such a film is spliced, a very difficult situation would be encountered, because at the position of the splice, there would be a thickness of four films glued on top of one another, which may have some effect on the film jumping the sprocket in the apparatus or other similar characteristics.

Q348. Referring to the bulkiness and the size of the cases, you mean that if a film would be 1221 cemented together, you get double the thickness of the film, which means that when you forward it in reel form, you have twice the diameter of the container? A. That is true, as well as twice the thickness of the container. And that also applies to the increased bulk in the picture machines.

Q350. What would you say as to the relative cost of handling positive film in that manner, as contrasted to the situation where we have the sound and pictures on one piece of stock? A. Without having any definite figures in the mat-

ter, I should think that the cost of a film produced in this manner would be at least twice the figure, if not more, of the cost of production of similar lengths of positive film in the usual manner.

Q351. The applicants of the patent in suit propose as one of their alternative procedures to cement the negative picture and sound records together and then print from those onto the
1223 same positive film. Is there any difference in that situation than in the Bullis situation that you have been discussing here with respect to disadvantages? A. There is a very considerable difference. When pictures are taken they are usually taken in comparatively short lengths, known as shots, which may be from a few feet up to a few 100 feet in length, and the difficulties in lack of spacing of sprocket holes increases directly as the length of the film. It is a cumulative variation and would be much more diffi-
1224 cult in the case of the Bullis patent than it would in the case of cementing the two negatives together.

Q352. In addition to the differences in length, what have you got to say with respect to the differences in costs in the two cases? A. For each negative film, many positive films are produced. As many as several hundred prints may be made of single negative film. This operation would have to be gone through once for negative film and perhaps several hundred times for corresponding positive films.

Q353. Mr. Jones pointed out some advantages of giving up the full width of one of the films

to sound records. Do you agree with his testimony on this point? A. Whereas some of the very earliest sound records were made entirely across the width of standard motion picture film, these records were made with wide slits. Today, the usual practice is to have a slit width of approximately 1/1000 of an inch, or an effective slit width in case the so-called optical slit is used. This would mean that in order to produce frequencies in the upper range of sound, 1226
it would be necessary to have this width absolutely at right angles with the direction of motion of the film. If one end of the slit were 1/1000 of an inch higher than the other end of the slit, an extremely serious loss of high frequency tones would be encountered.

This is not difficult if the length of the slit is 100 mils, because this means then that the tilt of the slit for a variation of 1/1000 of an inch would be one per cent. If the full width of the film of one inch were used, this would represent a tilting of the slit of one tenth of one per cent, 1227
and it is extremely difficult to keep a 1/1000 width slit lined up all the way across the film.

Mr. Jones was undoubtedly correct in his statement with regard to the averaging of slight variations in film structure, but this average becomes constant after the length of the slit has attained a certain value, and this averaging action has been shown by test to vary inappreciably from a slit length of 100 mils to 250 mils; that approximately the same ratio of background noise to sound is obtained on a slit length of 100 mils as would be on a quarter inch length.

1228 *Courtland Smith—For Plaintiff—Rebuttal—Direct.*

COURTLAND SMITH, called as a witness in behalf of the plaintiff being first duly sworn, was examined and testified as follows:

Direct Examination by Mr. Ward:

Courtland Smith; 48 years old; 255 East 71st Street, New York City; President of Pathe News.

In 1926, I was familiar with sound and picture
1229 development in the Fox Case studio work, and with the commercial work of the Fox Case Company for a few years thereafter. I had charge of that work.

The beginning of sound, so far as William Fox was concerned occurred about February, 1926. I entered Mr. William Fox' employ on the 1st day of January, 1926, and shortly thereafter, possibly a week or ten days, I had discussed with him the question of sound in pictures.

Previous to that time, four years previously, while I was in the Hays organization, I had fol-
1230 lowed the development of sound in relation to motion pictures, both on films and on disc; and when I went with Mr. Fox, one of the things I had in mind doing was to help him to develop this what I considered coming art, sound pictures.

Mr. Joy, whom I had known all my business life, and who had been with me in the Hays office, following all scientific developments in relation to motion pictures, had been in touch with Mr. Case of Auburn, New York, and had told me in the few years previous to 1926 that in his opinion Case was further along in the development of sound on film than anyone else.

1231

Almost immediately after entering Mr. Fox' employ, I arranged to take Mr. Joy over to Mr. William Fox. And in the very late winter or very early spring of 1926, Mr. Joy told me that it was time either to go to Auburn, and see the Case development, or arrange in some way to bring it to New York.

We actually did bring Mr. Case's equipment to New York, either the very end of April or the very beginning of May, 1926. We arranged the 1232
reproduction apparatus in what was known as Parlor B on 10th Avenue and 55th Street, New York City. We then took it into a theatre, the Nemo Theatre, Broadway and 110th Street. The results of all this, while in a way crude, were more than satisfactory to us, as pointing to a possible important development in the motion picture business.

Mr. Fox, having heard the crude film that Case brought down from Auburn and one or two short subjects that we made at Tenth Avenue and 55th Street, negotiated with Mr. Case, and 1233
sometime in July, he actually purchased the controlling interest in all of Case's patents.

During these negotiations, Mr. Case had referred from time to time to DeForest. Everyone knew, of course, that DeForest had been working for some time on sound-on-film, and in several of those talks with Mr. Case, he had referred to DeForest's trips to Europe, principally to Germany. That fact and the fact that Mr. Joy in his investigations had told me that in his opinion there had been a big development of sound-on-film in Germany, possibly antedating anything along those lines in any other country, made me

believe that the seat of the development which we were very anxious to find or the first source of this development might lie in Germany.

About that time I received a letter addressed to Mr. William Fox from Mr. Schroeder referring to some German patents. I had never known Mr. Schroeder, nor had ever heard of him, but immediately upon receiving the letter, I communicated with him, and the result was that I
1235 sent Mr. Joy to Germany, where he negotiated for an option on what was known as the Tri-Ergon patents.

I believe Mr. Joy left New York for Germany either the end of July or the first of August, 1926. By the time Mr. Joy returned, which was the latter part of the autumn or winter of 1927, we had progressed quite far with what was then known as the Fox Case Company. Mr. Fox had rented from the Fox Film Corporation an annex building on Tenth Avenue and 54th Street, the main building being on Tenth Avenue and
1236 55th Street, and in that building on Tenth Avenue and 54th Street, we erected the first sound studios possibly that were ever built.

We were then negotiating—that was the fall of 1926—with the Western Electric Company for a license. They had the best microphones and these were necessary in our work, and they were far advanced on sound-on-disc. They had given a public performance through the Vitaphone Corporation in August, 1926, which attracted a great deal of attention to sound in connection with pictures.

Now, I don't know how long to make this story because there are thousands of facts developed—

Courtland Smith—For Plaintiff—Rebuttal—Direct. 1237

As to the signing of this contract, the Fox Case Company with Western Electric— The contract was actually signed, I think it was the 2nd or 3rd of January, 1927. The contract was agreed to at the end of December, 1926.

As to the relations of the Western Electric and the Fox Case people in 1926. They were very close and friendly. They helped us and we helped them. We had one serious point of difference: They were sound-on-disc and we be- 1238
lieved in sound-on-film. In fact, before the contract was signed, it looked as if we could not agree to it for that one reason. Their contract at that time provided that they must select the kind of sound, the type of sound, the type of apparatus, and so forth. They had no confidence at the time in sound-on-film. We had no confidence at that time in sound-on-disc. They were entirely, except for some experimental work done in the Bell Laboratories, they were entirely sound-on-disc. We were at that time and always had been and to this day are, although I am not 1239
speaking now for the Fox Company because I have no connection with them, sound-on-film up to the time I left the Fox Company.

They did not insist on the Fox Company's use of sound-on-disc in that contract. We never were on sound-on-disc, but they insisted on the right, if they were not satisfied with the work that we did or the results, they insisted on the right to change it from sound-on-film to sound-on-disc. Off the record they said that they would give us every help and encourage us in our developments of sound-on-film, and that they did. They never insisted that we change from sound-on-film to sound-on-disc.

1240 As to what was the requirement, if any, that we should change from sound-on-film to sound-on-disc, their opinion that we would be better off and they would be better off to have us on the disc. They did not at that time have any confidence in sound-on-film. Their own experiments and developments had not gone very far, nor in my opinion were they very satisfactory at that time in sound-on-film. That development of theirs
1241 came later.

The contract provided that if they were not satisfied with the quality of sound-on-film that we got, that we would then have to go over to sound-on-disc, I remember all this very distinctly because Mr. Fox was very loath to sign the contract that gave them the exclusive right to determine whether we should be sound-on-film or sound-on-disc, but we had a good deal of confidence in the Western Electric, we knew very well their men, particularly their men in charge, and they assured us that they would not exercise
1242 that right, that almost autocratic right, unless we made a complete failure of sound-on-film. We had enough confidence in them, and I think it was thoroughly justified, to take their word that they would not make us change from sound-on-film to sound-on-disc unless we failed in the development of sound-on-film. We believed at that time that sound-on-film, although at that time it had not been publicly shown in a satisfactory manner nor had it been publicly shown by any Fox interest at that time, but we believed it was even then superior to sound-on-disc.

As to whether during this period around the latter part of 1926 or in 1927, the Western Elec-

tric Company submitted any sound-on-disc pictures for comparison with our sound-on-film pictures. It would be very difficult for me to answer exactly when they did that. Our first equipment for reproduction both in 55th Street and in 54th Street did not provide for reproducing disc. We later, possibly in the spring of 1927, equipped the 54th Street projection rooms to reproduce disc, but the reproduction of disc was being constantly done in the Warner theatres on Broad- 1244
way, so there was no difficulty in getting a comparison.

I got a comparison between the Fox Case sound-on-film and the Western Electric sound-on-disc at that time through that method of going to the theatres where the disc was being shown and then reproducing other pictures, not the same, because at that time there were no pictures that were recorded both on the disc and on the film.

In my opinion, there never was a time after the early fall of 1926, when sound-on-film was 1245
not infinitely better than sound-on-disc.

I was daily and nightly witnessing and listening to the reproductions of sound-on-film and I witnessed every public demonstration—not every one, that is incorrect, but every new one that came out, of sound-on-disc.

Often the Western Electric engineers and representatives were with me when I was doing this, and often they were not. I can name some of their engineers or representatives. The Western Electric's chief representative was Mr. John Otterson, who was in charge of their development for the Western Electric, as I was for Mr.

Fox. His assistant was Mr. Drake. Among their engineers were two men whom we later took over, excellent men: Whiting and Davee, and also there was a Dr. Crandall, who died shortly thereafter, and, oh, a number of engineers, some of whom I have lost tract of completely.

I met Dr. MacKenzie in connection with that work. Mr. MacKenzie, as we knew him, was particularly interested in the Western Electric at-
1247 tempts on sound-on-film, and I believe he had charge of that work for them. He worked constantly in our laboratories and studio in 54th Street for a period of at least six months. That was from the—I believe he came in even before the contract was signed, as some of their engineers did, and worked, oh, until probably the late spring or summer of 1927. We gave him every facility in the world, and I remember they used hundreds of thousands of feet of film in their own work in sound-on-film in those studios of ours. They did this work of sound-on-film in
1248 our studio shortly before the contract was signed. I believe their engineers came in about December, 1926, and they stayed there for a long, long time, it might have been a year; it might not have been more than six months; it was not less than six months. We were all working very hard to develop sound in connection with pictures, and while their particular interest was sound-on-disc, which we were not equipped to help them in, and in which they had far more knowledge than anyone else, it may have been that all of the work at that time that was being done on sound-on-film was done in those Fox studios. Nobody else was doing a single solitary thing in this country.

Q22. Some testimony has been given here in regard to the fact that Western Electric interests set up a light valve for recording sound in the Fox studios? A. Well, that was another point of difference. They had a light valve and we used a glow light. Their light valve was not a practical matter at that time. For instance, they couldn't photograph with it, they had no camera equipment for it. They could not take a picture with the Western Electric sound on 1250
film, because they had no camera. The light valve was their means for recording sound on film. The Fox System and the Tri-Ergon System used a flashing lamp.

This light valve in the Fox studios by that time in 1927, was all experimental. They never turned out a foot of film commercially until long after. The first sound on film, I believe, that Western Electric turned out commercially was in 1928. This matter was in 1926 and 1927. And I am able to fix the date on that because of a very interesting fact. The Fox Company, through 1251
the Fox Case Corporation and Fox Movietone News actually recorded pictures and sound in China, news pictures in China. We had reached that part of the world before the other companies had signed a contract, before Western Electric had even begun to make a foot of sound on film, the Fox interests were that far ahead at that time.

As to the requirements of Western Electric, that Fox should use the light valve, that was part of the contract. Their contract provided, as I said, that they must decide what kind of

sound, that meant sound on film or sound on disc, and what kind of equipment be used. They were always desirous of our using the light valve. They recognized that we were far ahead, so far as commercial requirements were concerned—

Mr. Neave: I object to what they recognized.

1253 The Court: Yes, strike that out.

The Witness: I will state it this way, then: We were far ahead for the reason that we were commercially recording and reproducing sound on film with the glow light, whereas there was no commercial recording or reproduction of sound with the light valve at that time. They never pressed the point that we use their equipment, when it would have obviously been impossible for us to have done so, or unjust to us to have done so.

1254 Q25. At whose expense was this light valve equipment put up in the Fox studios? A. I do not think they ever charged us anything. I think they supplied the equipment; I think even they paid for some of the film they used, although I remember we had a long dispute about that at one time, but how it was adjusted, I do not remember.

There has been some statement made here about the inferiority of the glow light with respect to the light valve. In observing the operation of the two, there never was an instance or a foot of film recorded by the glow light that

1255

was not infinitely superior to the light valve, as long as I was with the Fox Company.

That is, in later years, I observed the films recorded by the light valve, and those Fox was recording by the glow light, and I personally observed the difference between the two, hundreds of times. Of course, later the comparisons were public property, because all of the Fox recording was with the glow light and all of the Western Electric licenses such as Paramount, Metro, Universal, used the light valve in their sound on film.

1256

As to whether the Fox Theatres, up to the time I left them, used the disc reproduction system at all, well, not for their own films, but they were equipped to reproduce with disc, because they often ran Warner Brothers pictures which were entirely supplied on the disc. In the early development it was not true, but in the later development of sound in connection with pictures, the equipments were put in for both disc and sound reproduction. They very first equipment put out by Western Electric was for disc only at the Warner's Theatre on Broadway, or I think it was the Winter Garden, no, the Warner's Theatre, and all the Warner installations were for disc reproduction only. They had to change later to reproduce sound on film, because so much of the material was supplied with sound on film; but also conversely it is true that the Fox installations, although they were primarily designed to reproduce the Fox material which was, sound on film, they also had to equip themselves in the later days to reproduce on discs, for some of the material, such as the Warner pictures, were supplied only on disc.

1257

1258 *Courtland Smith—For Plaintiff—Rebuttal—Direct.*

But today it is admitted generally that there is no demand for disc reproduction, it is all the reproduction of sound on film.

It is very difficult for me to conceive of any argument in favor of sound on disc, for the simple reason that the picture is on the film.

Now, if one can get a satisfactory reproduction of sound on film, and it is satisfactory because all the recording and reproduction today is on
1259 film, why would one need another element, particularly when that element is subject to grave difficulties in the actual motion picture business, such as when the film breaks, as all film breaks in going through the machine from time to time, the film naturally shortens, every patch takes out so much of the picture. If the sound is in connection with the picture, then an equal amount of sound is taken out. There is a jump, but the jump is no more in sound or no less in sound than it is in the picture. Whereas, if it is on disc, every time you shorten the film, you put
1260 the sound ahead of the picture, because you cannot take a little sound out of the disc.

Furthermore, there is a far greater difficulty in synchronization, for the operators are often careless.

Also there is the actual opportunity which has happened thousands of times of getting the wrong disc for the print. Therefore, you can sometimes have a man singing, when you have the disc of something entirely different.

Also there are censorship boards throughout the United States, and they cut out five feet, ten feet, or a hundred feet of a picture. How can

1261

you cut that out of the disc, how can you take the equivalent sound out of the disc?

Those are the arguments that Mr. Fox, as a practical film man used when he had to decide, which was a very important question to him, whether he should have sound on film or sound on disc. We were not experimenting, we were not—Mr. Fox had millions invested in the motion picture business. He was one of the leaders of that industry, and his decision was a very important decision to make, and he made it very 1262
carefully and with full knowledge of the requirements of the motion picture industry.

With all due respect to the Western Electric, they were not in the motion picture business at that time. They were beginning to be interested in a very important part of it, but they were not practical and experienced film men, and I think that is the reason that they went wrong at the start and developed sound on disc. They later changed, and all of their recording today for the motion picture companies is sound on film.

When Fox Case started out they had what 1263
they called the Movietone wagons, going around to take sound pictures. Those were their equipment for the Fox Movietone News. The Fox Movietone News was probably the biggest, in my opinion, Fox Movietone News was the biggest single reason for the successful introduction of sound into the motion picture business, because it showed not only that there was a tremendous demand on the part of audiences for sound, they responded tremendously to such a feature, but it showed it was practical to record pictures with sound anywhere anything that could be photo-

graphed in silence, and today that has been proved to be the case.

About the Tri-Ergon apparatus, the system being brought over by Mr. Joy, Mr. Joy left the United States either the end of July or—I remember distinctly that the Tri-Ergon equipment landed in New York, either in the middle of December, 1926, or toward the close of that month. It was immediately set up first at 10th Avenue
1265 and 55th Street studio, which was a very large floor, and I remember a lot of the equipment being scattered all over the floor. And then later, it was brought down and used in competition with or in comparison with the Fox Case equipment in the studio at 10th Avenue and 54th Street.

I did have occasion to compare the merits of the sound and pictures, the Fox Case sound and pictures with the Tri-Ergon system and the disc sound pictures, that system of Western Electric at that time.

1266 Q34. To what extent did you have occasion to observe it? A. Well, practically to a daily extent. That was my only work for several years.

Q36. And what is your opinion as to the relative merits of the three, as you saw them at that time? A. I think easily the Fox Movietone or Fox Case, which it was, was No. 1, as being best in quality. At that time I would have preferred the Tri-Ergon sound on film to the Western Electric sound on disc.

Q37. I believe you stated that at that time Western Electric did not present any sound on film for comparative tests? A. They presented it for laboratory tests, but it was not in satis-

factory shape at that time, and wasn't for some time thereafter.

Q38. Did they ever at that time present any to you for your laboratory, any sound on film for comparison? A. They did, later, about the summer or fall of 1927. They then had developed a camera to record sound on film, and after a great deal of experimentation, they showed some results. And I even then would have preferred, at that later period, I would have placed in the 1268
later period, comparing the disc machine with the Fox Case sound machine, I would have placed the Fox Case sound as first in quality. The fact that it was easier to handle was obvious, because we were at that time, after March, 1927, actually recording news events.

The first time sound news shots were taken was at West Point in March, 1927. That crew immediately left for Italy, and actually recorded Mussolini in Italy in May, 1927. At the same time, toward the end of May, 1927, one of the great historic events of all time, Lindbergh's flight to Europe, was actually recorded by Fox 1269
Case sound-on-film, and the films were thereafter shown. That was one of the biggest news stories ever photographed, and was one of the reasons for the tremendous interest in sound pictures. To show how feasible sound-on-film pictures were at that time, the Fox Laboratory got their negative in the morning, and in the afternoon we were showing the picture on Broadway.

Q39. Now, did you or did you not give access to the Western Electric people to your film work both as to Fox Case and Tri-Ergon in 1926 and 1927? A. Oh, yes, they had access at all times

1270 to all of the work that we were doing, either in Fox Case or with the Tri-Ergon. You know at that time we had not purchased, or Mr. Fox had not purchased, any interest in the Tri-Ergon. He had an option, and we were seriously trying to check it, and the Western Electric were helping us to find out as to what there was to it. The Western Electric engineers followed every bit of the work that we did, and with our full knowl-
1271 edge and permission, both in the studios and outside the studios.

Q41. Some testimony has been given here in regard to some committee being formed of representatives of these companies you have mentioned, to investigate the Tri-Ergon system. Do you know anything about that? A. We had committees for everything; we had committees of engineers to investigate and follow every development of the work, the laboratory work, the recording work, the reproducing work. I do not know what committee you refer to.

1272 Q42. I refer to a committee where a committee was appointed to investigate the Tri-Ergon system when it came here. A. Yes, that is true, there was such a committee appointed by me. The committee was appointed to follow out the general course that we followed in all this work, and that was to have everybody connected with the work familiar with what was going on, to criticize and suggest and be in a position to take advantage of any development.

I appointed the committee. First I remember it was composed of a large number. I do not know, I do not remember who they were, but Mr. Joy, who was really in charge of the Tri-Ergon

work, or this development, under Mr. Fox, but who reported to me, he objected that we had too many Western Electric and Fox Case men on the committee, and then I made the committee smaller.

The committee at the start I think was Mr. Joy and Dr. Engl, Dr. Engl, who had come over from Germany with the Tri-Ergon equipment, and was really technically in charge of it, and as I remember, was one of the three men, the 1274
Tri-Ergon was made up of three men, and Dr. Engl was one of the three inventors. So it was Mr. Joy and Dr. Engl representing what we might call the Tri-Ergon interests, Mr. Sponable, who was the chief engineer for Fox Case represented Fox Case, and I believe Mr. Drake, and Dr. Crandall, who died, represented the Western Electric.

That commtitee held several meetings, or they were in session as all those committees were, most informally, but all the time. I remember the first meeting we had, they had a dinner and I attended it. I tried to attend some of the in- 1275
formal meetings of all the committees, not that I was in any way technical, but the general development of this work was under my supervision, and I had to keep in touch with it. Thereafter they had some meetings. I remember both Mr. Joy talking to me about it and Mr. Sponable talking to me about it. I believe Mr. Sponable was somewhat jealous of Tri-Ergon, and I believe Mr. Joy was somewhat jealous of Fox Case, and I believe that possibly the Western Electric—well, I can't speak for them.

I remember many times Mr. Joy and Mr.

Sponable, who were both reporting to me, talking to me and criticizing and complaining, and so forth.

As to whether Mr. Fox exercised his option after this trial and investigation of the Tri-Ergon system, he exercised part of his option. His option was both for the rights for the United States and Canada and Mexico, on the one hand, and world rights on the other hand. The price,
1277 as I remember it, was $60,000 for the United States and $100,000 for the world rights.

Mr. Fox, at the expiration of the period, the option period, which I believe ran six months, exercised the rights to this country, and he obtained an extension of his world option rights.

This $60,000 was a cash consideration, and there were also some stock considerations, I believe he had to give 10 per cent of the stock of a company that he obligated himself to form to them.

Q47. Can you state when the Fox Case started
1278 using the method of taking the sound and picture records on two separate negatives, and then separately developing them and then printing the sound and picture records on one positive? A. I do not believe Fox Case, as I remember it, Fox Case did not do that until we went to the coast, Hollywood, where, for production purposes, sound and picture recording on two different pieces of film were very much desired.

Q49. Now, do you know anything about the physical condition of the Tri-Ergon apparatus when it arrived here? Was the apparatus in satisfactory condition when the tests were carried out, were there any handicaps? A. It had

1279

been badly damaged in shipping, and it took some time to correct it and fix it up.

The Western Electric people were, at the time that they came in to carry on this investigation, given access to the Tri-Ergon patents, we supplied them either with copies of the patents or with the numbers. I imagine that they had all those themselves. I don't remember whether we actually supplied them with the patents or gave them the patent numbers, but we gave them all 1280
the information we had concerning it.

I was subpoenaed to testify here. I said practically I would be willing to testify if I had facts that would interest anybody, but I would have to be subpoenaed. I said that I did not desire to testify, but that if I were to be subpoenaed and my testimony was important, I would, of course, accept the subpoena.

Cross Examination by Mr. Neave:

The Western Electric or any of its interests did not join with Mr. Fox in exercising the option on the Tri-Ergon matters for any rights. 1281
They were given full opportunity to do so at their request, to come in and join in the exercise of the option and pay some of the money and get some of the rights, only so far as the world rights were concerned, not so far as the rights for this country. In fact, it was due to their request that they be permitted to enter into a part ownership of the world rights that the option was extended for the world rights, and for a period of about eight months they were very actively interested in joining in exercising those rights. Then, they suddenly stopped and they did

not exercise the rights and they asked Mr. Fox not to exercise those rights. That period of eight months began some time after or immediately after Mr. Fox purchased the American rights, which must have been about June, 1927. Now, these dates may vary by a month or two. I am only quoting them from memory.

XQ60. Prior to that time, Mr. Fox or his interests had wished the Western Electric Com-
1283 pany or offered to the Western Electric Company to come in with him on the exercise of the option that he originally obtained? A. No, I would not put it that way. The Western Electric asked Mr. Fox for permission to come in on the world rights if he exercised them or if they wanted to exercise them.

XQ61. I am talking of a period prior to that time, prior to the time when Mr. Fox exercised the option on the American rights. Wasn't there any talk then of the Western Electric Company joining in the exercise of the option on the Amer-
1284 ican rights? A. No, Mr. Fox never opened up the American rights for the Tri-Ergon to anybody but himself.

XQ62. Mr. Drake testified to the contrary. Does that refresh your recollection at all? A. No, it does not, because I had sat alongside Mr. Fox for several years, and these matters were in daily discussion between us, and to the best of my knowledge and recollection, and I think everything will bear it out, Mr. Fox reserved at all times the American rights to the Tri-Ergon for himself. He was willing, if the Western Electric wanted to come in, to either have them in as a part owner, or turn over to them the world

1285

rights, exclusive of America. I first got in touch with the Western Electric Company in connection with these matters about September, 1926—I mean about all sound matters. About the Tri-Ergon matters, about the time that he (Engl) was due to come over here, which was about November or December, 1926; we disclosed to them that there was this German situation, and they knew that we were trying to work out an option which we finally secured. They knew that we 1286
had requested the shipment of apparatus, and they knew when it was received.

The committee I spoke of was not appointed, obviously, until Dr. Engl came over here for the first time, the first time, so far as I knew.

Prior to that time, I said that the Western Electric engineers, together with the Fox engineers were working in the Fox Case studios. You see, there never were Fox studios in New York, at that time. It was Fox Case, another company.

XQ69. And you said, I think, that all of the 1287
work on sound on film was being done in those Fox Case studios, and that no one else was working anywhere else in the country on sound on film? A. Well, DeForest might have been working. I will have to correct it to that extent, and also the General Electric Company, that is right. The Western Electric were working in the laboratories, and they were working in the Fox Case studios, as I said.

They were working in the Bell Laboratories, but that was not commercial. In the motion picture business we never regarded anything that was not commercial, that was not put out to the

1288 *Courtland Smith—For Plaintiff—Rebuttal—Cross.*

public, as of any particular importance at the time, because, after all it was what we had to show to the public that ran our business.

XQ72. Then, in addition to the work which was being done on sound on film in the Fox Case studios, the General Electric Company was doing work and DeForest was doing work and Western Electric was doing work in their laboratories? A. I don't know whether DeForest had
1289 been doing work. DeForest was the first one in this country, I believe, to show publicly sound on film. That was in 1922 or 1923.

XQ73. Then, when you said that all the work on sound on film that was being done in this country was being done in the Fox Case studios—You don't know that to be the fact, do you? A. I know that to be the fact, that the commercial work, the work that was shown to the public, was being done then, all the work that was being done on sound on film that was commercial, in other words, that was being shown to the pub-
1290 lic, was then being done at the Fox Case studios on 10th Avenue and 54th Street.

When I used the expression in one of my answers to Mr. Ward that, "that development of theirs came later", I was there referring to Western Electric Company development of sound on film.

XQ76. How do you know the work was not done earlier in the laboratories? A. Because we were in just as close contact with them as they were with us.

XQ77. You went to their laboratories every day? A. Oh, yes—not every day. I went through many times.

1291

XQ78. Do you think you went through all their laboratories? A. Unless they had something up their sleeve that they hid from me, and I don't think they did, because we played perfectly fair with them.

In September, 1926, I began to know about work that was being done by the Western Electric and associated laboratories. I know all the work up to that time because they told me of all their work and showed it to me. I will tell you 1292
how I knew it: because the other big companies, when they signed the Western Electric contract, that was the first time the Western Electric ever tried to put out commercially sound on film.

XQ83. You are talking about commercially. A. My dear sir, the only thing that I can talk about is the commercial angle, because in the motion picture business, whatever we have in the laboratory—

> The Court: We have had that. You have said that before, that you did not regard anything but the commercial output. 1293

I would not attempt to answer how much of the apparatus is common to the sound on disc and sound on film, because I am not technical enough to know. I can state it broadly, but I could not be held to the answer my training and experience have not been along technical lines, but rather along executive commercial development lines. As to what the technical men of the Western Electric Company or its associates reported as to the Tri-Ergon apparatus, I can only tell you what they told us. I cannot tell you what they reported to their own people. They did show

1294 *Courtland Smith—For Plaintiff—Rebuttal—Re-direct.*

great interest in it. They did not join in getting the rights. At the end they did not, there is no question about that.

Re-direct Examination by Mr. Ward:

I said that in addition to our giving the Western Electric access to our work up at the Fox studios, they also gave us access to their laboratory work. I was in their laboratory on various
1295 occasions. It was the understanding that they were to show us what they had done up to the time, and open up everything. Obviously, they were under pledge to us to be as frank and as open to us about their work as we were to them, and I have no reason to believe that either side ever cheated in the slightest in that respect. At this time in their laboratory, or when I was examining or inspecting or going through their laboratory and getting their information, what they had to disclose with regard to sound on film, was what might be known as a laboratory
1296 demonstration. They could run film through and reproduce it. In my opinion, it was not satisfactory. They had no camera in which to photograph the picture and the sound, either on the single system or the double system. That development of theirs came later. If you want me to testify about the quality of the sound on theirs, I can only repeat what I have said before, that in my opinion, at that time, and that time covers a period of several years, the quality of Fox Case sound was superior to the quality of any other sound on any other system manufactured by anyone else, either sound on film or sound on disc.

William C. Ballard, Jr.—For Plaintiff—Recalled—Rebuttal—Direct. 1297

WILLIAM C. BALLARD, JR., resumed.

Direct Examination (Continued) by Mr. Ward:

Q354. Mr. Ballard, you called my attention to one or two corrections you wished to make in the answers to the last two or three questions now on the record. Will you please refer to those and state what corrections you had in mind there? A. In the answer the Q352 appearing on page 677 of the record, in which I was asked: 1298

> "In addition to the differences in length what have you got to say with respect to the differences in cost, in the two cases?"

The answer was:

> "For each negative film many positive films are produced. As many as several hundred prints may be made of single negative film. This operation would have to be gone through once for negative film 1299 and perhaps several hundred times for corresponding positive films."

What I had in mind was, in speaking of the term "this operation", was, of course, the cementing operation, that the negative film had to be cemented but once, whereas each of the several hundred positive films must have to undergo this process, and I would like to correct that statement by inserting the word "cementing" between "This" and "operation".

In answering the next question, it does not seem clear that I had intended to point out that

1300 for a given variation from the exact condition of perpendicularity of the slit to the motion of the film, a slight percentage of variation would be ten times as important in the use of a slit one inch in length as it would be in the case of a slit 100 mils or one-tenth of an inch in length.

Q355. Are you referring there to your testimony on page 678-A? A. That is correct, in answer to Q353.

1301 Q356. Do you know if the alternative suggestion of the Bullis patent of connecting the sound and picture films together has gone into commercial use? A. As far as I know, the system of producing two positive records on separate film and cementing them together for reproduction has not gone into commercial use.

Q358. Will you please state briefly the type of sound record that Bullis shows in U. S. patent No. 1,679,708 issued August 7, 1928? A. This patent has to do with an electromagnetically recorded and reproduced sound record.

1302 Q359. Explain a little more in detail just how the record is constructed; that is, what is it? A. The record is produced by passing a flexible strip of magnetic material past an electromagnet whose—

Q. I did not mean that so much, but describe that film as shown there in the drawing. Is it metallic or celluloid, or just what is it? A. It is a combination of a metallic and celluloid strip. The metallic strip is produced in which the picture openings are punched out and the celluloid strip pasted or joined in place in some manner to reproduce the picture when this combined film is exhibited.

William C. Ballard, Jr.—For Plaintiff—Recalled—Rebuttal—Direct. 1303

Q361. That is, there is a metallic frame, one part of which is left for the sound record and on the other part of the metallic frame the picture film is secured? A. That is right. The patentee further makes the statement, beginning line 7, in this later Bullis patent, 1,679,708:

> "While it has been heretofore proposed to combine a sound and picture record photographically on the same film, it has 1304
> been difficult to successfully carry out this scheme chiefly for the reason that different manipulation and treatment of each record is required in the developing of the picture record and sound record to obtain the best results, and this is not possible where both records are photographically made on the same film. I have found that when recording of the sounds is accomplished photographically, the two-film method as set forth in my patent No. 1,335,651 of March 30, 1920, is the most 1305
> practical when a photo-electric cell is used to reproduce the sound."

Q363. Referring to the other Bullis patent No. 1,335,651, is the process of Bullis as to each method suggested by him, the same as or different from the process of the patent in suit and defendant's, that is, in your opinion? A. It is different from that of the patent in suit and that employed by the defendant, in my opinion.

Q364. Will you please take the chart, Exhibit No. 22, and point out to the Court to what extent you find the process of Bullis and the pat-

1306 ent and the defendant's process in common and to what extent apart? A. The Bullis patent advises of separate exposure of the sound stock, separate development of the sound stock, printing from the sound negative onto a sound positive, developing the sound positive, and with a final result of a separate sound positive record. The same action is gone through for the picture stock. The picture is first exposed on a
1307 single strip of negative film, developed separately, printed into another separate strip of positive picture film, separately developed, and producing a second independent strip of positive film on which the picture is recorded. These two strips then are used for reproduction purposes.

There is no combination in action as is in the defendant's process or in the patent in suit where the two separate films are printed together on a single film and this second film dedeveloped to produce the final product.

Q365. Then, as I understand your answer, of
1308 the four steps of the defendant's process and the process of the patent in suit, Bullis parallels the first two and then differs from there on? A. That is true.

Q366. Then, in the Bullis alternative or supplemental suggestion, where he brings the separate sound and picture positives together and cements them together, that would constitute still another or fifth step in Bullis which is not the defendant's or the patentee's process? A. That is true.

Mr. Ward: I offer in evidence a copy of the Bullis patent No. 1,679,708, in re-

spect to which the witness was questioned a few minutes ago, to be marked Plaintiff's Exhibit 30.

(Marked Plaintiff's Exhibit 30 in evidence.)

Q367. Will you take the Craig patent No. 1, 260,337, and explain to the Court the process disclosed in that patent, referring to such parts of the specification as you deem advisable to 1310
clarify? A. This patent refers to a phonographic attachment for moving picture machines and the production of sound and picture records. The system to which the disclosure of this patent is directed consists of a process in which the visible picture and the sound record are so constructed and recorded that they may overlie one another without interfering in the effective reproduction of each other. The patentee describes that the sound and picture negatives are made upon separate photographic films of ordinary construction and the picture record is then reproduced 1311
by ordinary photographic reproduction methods of pictures on one side of the film, and on the back of the film and opposite the picture records, as far as the back and front of the film are concerned, another sound record is produced designed to be reproduced by the action of infrared rays.

The description of the picture record is stated at line 5, page 3:

> "If a film is prepared, therefore, having on one side the ordinary photographic reproductions of pictures, and on the other

1312 *William C. Ballard, Jr.—For Plaintiff—Recalled—Rebuttal—Direct.*

side a phonographic sound record, capable of being reproduced only by infra-red rays, the sound record will not interfere with the passage of white light to and through the pictures and the presence of the pictures will not interfere with the passage of infra-red rays through the strip."

Several different systems of reproduction are
1313 described, among which is the Edison tasimeter, the selenium cell and the bolometer.

The picture records in their final positive form are produced by reducing from the film of silver halides, as is customary in the ordinary photographic reproduction methods of a coating of reduced metallic silver. On the back of the film, the patentee desires to form a sound record of some material which is completely pervious to visible light, such as would be used for reproducing the picture, and impervious to infra-red
1314 rays.

There are a number of nebulous suggestions as to how this sound record on the back might be produced. For instance, the patentee suggests the use of cuprie chlorid. As is well-known, cuprie chlorid is of itself a deep blue color, and any considerable deposit of cuprie chlorid would be reproduced on the screen as blue lines of varying intensity. Water. It is difficult to see how water may be used to produce an infra-red record, and even notwithstanding the fact that the patentee describes the use of water by attempting to use it as water of crystallization, it is a well-known fact that in the normal repro-

duction of pictures, the intense light from the reproducing arc causes a very high temperature at the film itself, so that if it were possible, which it does not seem to be at all evident, to produce initially a record made in water of crystallization, this record would probably be destroyed, due to the high temperature of the projecting arc.

I know of no method by which a sound record could be made using oxygen or carbonic acid gas, 1316
nor with the use of very thin metallic silver or selenite. Selenite, as has been pointed out previously, is crystallized gypsum. Obviously, it would be extremely difficult or impossible to use it in the crystalline form, and when it is powdered, it is normally opaque.

Alum is of interest principally from the standpoint that it contains water of crystallization, and this would be, of course, open to the objection that the alum, under the intense heat produced by the projecting arc, would probably be desiccated. 1317

In order to have this disclosure operate satisfactorily, two things are necessary. One is that the picture record must be completely pervious and transparent to infra red rays, and the other is that the sound record must be completely transparent or pervious to visible light.

It is a well known fact that the reducing effect of ordinary photographic emulsions is not completely pervious to infra red rays. In fact, it has a very decided impervious effect, and it is quite obvious from the process described that the sound record would not consist entirely of

the sounds reproduced on the back of the film, but would consist of a jumble of unintelligible noises produced by the passage of the picture record in the path of the infra red rays.

The reproducing equipment described is very interesting in showing that the patentee had very little idea of the requirements of sound reproduction. One type of apparatus proposed for use in reproducing is the Edison tasimeter. This is
1319 shown in Fig. 10. In Fig. 10 element 41 is a rod of hard rubber or vulcanite. The infra heat rays are allowed to fall on this rod of hard rubber, and in doing so, they have some heating effect. The heating effect of the infra red rays then tends to elongate the rod to a greater or lesser degree upon the carbon granules shown in Fig. 3.

It is quite obvious that in order to reproduce sounds such as those encountered in talking pictures, that this rod would have to heat up completely, cool, elongate and shorten in length at a rate of several thousand times per second,
1320 which, I think is obviously impossible.

The same criticism applies to the reproducing equipment indicated in Fig. 9, which is known as a bolometer. In this case, one of the resistance arms of a wheatstone bridge arrangement is caused to vary in resistance due to the impinging infra red heat rays thrown upon it from the sound record. It is a fact that the action of the normal type of apparatus of this character is extremely sluggish and it would be impossible to reproduce any of the high frequency variations encountered in sound by this system of alternately heating and cooling the wire 39 of the Bolometer.

William C. Ballard, Jr.—For Plaintiff—Recalled—Rebuttal—Direct. 1321

A third suggestion for reproducing the sound record is to use a selenium cell. As is well known selenium cells are sensitive not only to infra red rays, but also to visible light.

Q368. You have mentioned certain substances at lines, starting at line 35 on page 3 of this patent, that is substances, suggested by Craig. What have you to say in regard to certain other substances that are referred to commencing at line 30? A. I do not understand that he pro- 1322
poses the use of the three substances mentioned on line 32 for the production of the invisible sound records. It is quite obvious that bromin, being in normal condition, that is at ordinary temperatures, could hardly be used for the production of a sound record, particularly in view of the fact that it is definitely stated beginning line 7 of page 3 that the picture record is to be produced by the ordinary photographic reproduction of pictures.

Vulcanite is the scientific term for hard rubber. Perhaps he had in mind the cutting out of 1323
some series of silhouette figures from sheets of hard rubber; I do not know.

Q369. What have you to say with regard to the suggestion of Craig of using the ordinary photographic reproduction of pictures, and then with respect to using thin metallic silver as to the sound record, as I understand it? A. The final results in the system known as the ordinary photographic reproduction of pictures, in my estimation, is the reduction to metallic form of certain silver halides so that the black portion of the picture that we see is actually a finely deposited series of silver grains. These, of course,

must be thick enough to cut off visible light. Craig suggests that the metallic silver, so then as to be transparent to visible light, may be used for the infra red sound record; and it is quite obvious that thin metallic silver, so thin as to be transparent to visible light, and cut off infra red rays, then silver thick enough to completely cut off the visible rays, will cut off invisible infra red rays to a proportionately greater degree.

1325 Q370. Now, Craig, mentions in his specification, a modification wherein he may have two sound records on the same side of the same film. Will you state under what conditions he proposes to use those? A. The double sound record shown in Fig. 8 is recommended in cases where it is desired to record simultaneously from two different plates on a given picture set; and to reproduce the two sound records from reproducing equipment stationed at equivalent positions in the reproduction.

Q371. When he uses the two sound records on
1326 the film as shown in Fig. 8, what does he disclose as his proposal for the use of the other side of the film? A. The other side of the film is to be used, the full width of the other side of the film is to be used for the production of the visible, of the picture record.

Q372. That is, if he wants to produce a sound picture in which a dialogue is carried on, he would print the pictures of the two parties across the one side of the sheet, on the face of the sheet, and then he would print the two separate sound records on the other side of the sheet, having the sound record of one party's speech overlying that party's image, and the sound record of the

other party's speech overlying the other party's image or images, is that right? A. I think that is correct.

Q373. Do you find anywhere disclosed or suggested in this patent any type of sound and picture film, other than one where the picture record overlies or underlies the sound record? A. I do not.

Q374. Do you find that to be the object and teaching of this patent? A. I do. 1328

Q375. Now, I refer you to Craig patent 1,260,338 of March 26, 1918, which you stated to be a division of the application resulting in the other patent. Do you find the double sound record shown in Fig. 8 there with the pictures completely overlying the two sound record? A. Fig. 8 shows the double sound record with pictures overlying the sound record.

Mr. Ward. I offer in evidence Craig patent 1,260,338, a copy of it as Plaintiff's Exhibit 31.

(Marked Plaintiff's Exhibit 31 in evi- 1329
dence.)

Q376. Professor, I refer you to the Craig specification, page 4, commencing at line 113 in patent 1,260,337 and direct your attention particularly to the statement in line 19, the language:

"Photographically printed upon one film or upon opposite sides thereof."

Mr Jones, Defendant's witness, testified in substance that while Craig did not disclose any

system or method, other than one in which the pictures and sounds were superimposed, or one overlying the other, yet that this language, in his opinion, would infer to him that Craig had in mind using a film in which the picture and sound might not be, one on the front and one on the back or on opposite sides. Will you please state whether you agree with Mr. Jones on that and give your reason for your answer? A. I do not
1331 agree with Mr. Jones in this respect. There is nowheres in the patent any disclosure of a method by which the sound and picture record could be produced on the same side of the film; and no reference throughout the patent is made to this condition. The line following the one reference was made to states, this is beginning line 120:

> "In printing these records, the picture record would be printed as usual on one side of the moving picture film and fixed, the fixing solution however not being al-
> 1332 lowed to touch the other side of the film or strip."

It is quite evident that the patentee was desirous of describing a system in which these two records would be kept separate and located on opposite sides of the film.

Q377. And is it a fact that the whole specification with its complications is directed to the attempted solution of a problem where picture and sounds are to occupy the full film, that is, the pictures on one side and the sound on the other, one overlying the other? A. That is true. There would be no point to these complicated treatments, if such were not the case.

Q378. Is what you have testified to with respect to the disadvantages of a large sound record with reference to the Bullis patent, does that also apply to Craig? A. That is also true in connection with Craig.

Q379. Do you know whether anyone, as far as your knowledge goes, has used or uses this Craig process for the production of sound and picture records? A. So far as I know, no one has ever been able to make a satisfactory film by the 1334
Craig process.

Q380. In your opinion, is the Craig method disclosed in his patent, an operative one? A. It is completely inoperative for many different reasons.

Q. 381. In your opinion is the Craig process different from or the same as the process of the patent in suit, and the defendant's process? A. It differs from both the process described by the patent in suit and that used by the defendant.

Q382. I refer you in the patent in suit to page 1, commencing at line 9, down to line 26, which 1335
deal with the problems of development with respect to picture and sound records. You heard Mr. Jones' testimony, which, in substance, as I recall it, was that the idea disclosed by the patentees here was different developments for different parts of the picture sequence rather than different developments for the picture sequence and the sound record. What have you to say on that matter? A. I do not understand that this is what the patentee had reference to in the specification.

Q383. Will you give your reasons for your answer? A. May I have the question repeated?

1336 *William C. Ballard, Jr.—For Plaintiff—Recalled—Rebuttal—Direct.*

(Question 382 repeated by the reporter.)

A. This is clearly pointed out in line, beginning at line 16: "As the same film, however, carries close to the picture sequence, the normally exposed sound sequence." It is not difficult to maintain normal exposures in sound sequences, and the difficulty lies in getting the proper degree of exposure in the picture sequence so that the pic-
1337 ture sequence may be under or over-exposed with respect to the sound sequence.

Q384. That is, it is your opinion that the contrast drawn is one of under-exposure or over-exposure of the picture sequence with respect to the sound record? A. That is correct.

Q385. Will you refer to the German Reimer patent 279,598, and state briefly and generally what that patent discloses? A. This patent discloses a proposal to obtain sound with motion pictures by a system in which the picture record is made in the usual way, and at the same time
1338 the picture record is made, a phonographic cylinder or disc record is made. This disc or cylinder record, after having been appropriately treated, is cut into strips so that it may be joined with the picture film and reproduced in the normal phonographic way, that is, by the mechanical motion of a stylus following the indented grooves on the sound record. There is no photographic recording of sound in the entire patent.

Q386. That is, it is simply taking a phonographic record, either on a cylinder or disc, and in some way that may or may not be possible, they cut a long strip, fine strip of that record from either the cylinder or disc, and then pro-

 1339

pose to paste that onto an ordinary picture film? A. That is correct.

Q387. And then they propose to take that sound off by a stylus or what? A. In the ordinary phonographic method, using a phonographic needle or its equivalent.

The Court: There wasn't any question about that anyhow, was there? That was offered simply because of the provision on 1340
page 2 you have the two combined on one side, the sound and the picture.

Mr. Ward: Yes, they set it up as an anticipation.

The Court: Yes, but that was the purpose of it, wasn't it?

Mr. Ward: Your Honor was referring to page 2?

The Court: Yes.

Mr. Ward: Yes.

Cross Examination by Mr. Ashton:

XQ388. Do you recall your testimony, Professor Ballard, regarding the Greensfelder patent, and particularly with respect to Fig. 5 of that patent? I understood you to say that the sound record shown in Fig. 5 was a negative record, whereas the picture record of Fig. 5 is positive record. Is that your testimony? A. I do not think I called the left hand film a sound record, no. Because I have never considered it such, Mr. Ashton.

XQ389. You stated the one was positive and the other negative? A. Yes.

XQ390. I think you also stated that this opinion of yours was based upon the statement of the patent at page 5, beginning at line 128? A. Page 5?

XQ391. Yes, page 5, line 128. The statement is, "A convenient way to obtain the film 40 is to first photograph a negative of the original sound film and place it side by side with a finished and pieced negative of the corresponding picture film,
1343 then from the two print a one-piece double-width positive such as shown in Fig. 5."

XQ392. You know, don't you, Professor Ballard, that the original sound film there referred to is the perforated film on which the film of Fig. 5 is made? A. I do not understand that any perforated film was used anywhere in the process.

XQ393. You understand from the patent, do you not, that the film of Fig. 5 is to have transparent sound marks on it? A. Yes, it is, partially transparent and partially opaque.

XQ394. Are not the sound marks themselves
1344 transparent? A. As I interpret the patent, when the action is to take place an opaque portion should be in front of the reproducing slit.

XQ395. I call your attention to page 2, beginning at line 76, where it is stated: "A shelf 9 is placed at a suitable point between the lens 6 and screen 7, or at the screen 7, so as to intercept the rays of light 10 coming from the film through the 'sound marks' 3."

Is not that a statement that the sound marks are transparent? A. I do not think that necessarily follows, Mr. Ashton, at all.

XQ396. Are not these sound marks also referred to as transparent on page 2, beginning

at line 53? A. I am not sure as to what the patentee means by sound marks. If by sound marks he means the mark extent while the action is not to take place, then I should be willing to state that the sound marks are transparent. If by sound marks that show on the film that is being reproduced when the action was to take place, then I can see no basis for it.

XQ397. Have you ever read the disclosure beginning at line 39, page 2 of the patent? A. 1346
Yes. This, of course, refers, as I take it, to the disclosure of Fig. 3 and not that of Fig. 5.

XQ398. What do you base that statement on that it does not relate to Fig. 5? A. I see no statement there that it does relate to Fig. 5; he has been talking about Fig. 3 up to this point.

XQ399. You made some statements as to the operation of Fig. 1. A. Yes.

XQ400. I would like to ask you if you have read line 121, page 2 of the patent? A. I have read the entire patent several times, yes.

XQ401. Does it not state there that the electro-physical change is relied on for the purpose of closing the electric circuit including the battery 15 and energization of the corresponding electro-magnet? A. That is true.

XQ402. That is, if you look at Fig. 2 the light falls on the selenium cell 11 which operates the relay 14 and closes the circuit including the battery 15 and causes the electromagnet 16 to operate the piano control 17? A. To which selenium cell 11 are you referring, Mr. Ashton?

XQ403. I call your attention— A. There are three.

XQ404. Any one of those three. The three are connected up in different ways.

XQ405. Refer to the one that is marked 11. A. Yes.

XQ406. Is my statement correct? A. Your statement is not correct with respect to that one marked 11.

XQ407. Is it correct with respect to the left hand one? A. No, that is not a true statement.

XQ408. Will you please state the way you understand the operation to be? A. There is a very definite way in which the system must operate according to Fig. 1 when the light impinges upon the cell 11 of Fig. 1—that is not shown, but is referred to as being on shelf 9. The cell lowers its resistance, allows a greater circuit to flow from the battery 13, and pulls up the armature of the relay 14. This opens the circuit of the battery 15, and that energizes the magnet disc 16.

XQ409. This is your understanding of the operation? A. I see no other way than to interpret it in this manner.

XQ410. You referred in your testimony on Friday to the statements in the patent in suit and in the application as originally filed in which the two records may be pasted together. You did not intend to suggest at that time, Professor Ballard, that the patent did not contemplate that the two separate films of Fig. 1 could not be pasted together or secured together in making the final film of Fig. 2, did you? I am referring now to the patent in suit. A. I do not see how that would be possible, Mr. Ashton,

because the two films of Fig. 1 are both negative films, and the film of Fig. 2 is a positive film. It is quite obvious that you could not paste two negative films together and get a positive film out of it.

XQ412. The patent in suit states, does it not, page 1, beginning at line 79— "One can, however, previous to the printing, unite longitudinally together the two developed negative films, and then copy this so united negative in the 1352 usual manner"? A. That is correct.

XQ413. Do you not understand that that applies to both Fig. 1 and Fig. 3 of the patent? A. My criticism was directed to the fact that you referred to Fig. 2 and Fig. 1 together, and they show different types of film. One shows a positive and the other shows negative film. I had no intention of indicating that the statement given by the patentee was impossible to perform.

XQ414. You stated on Friday in connection with the Bullis patent that there were certain 1353 objections to the use of two films, and particularly you referred to the patent in suit and stated that when the patent in suit suggested pasting the two films together, that that had to be performed only once. Was that your testimony? A. It has to be performed once in the production of the picture because one negative is used as a usual thing to produce a number of positives.

XQ415. About how many positives would be made from the negative? A. That depends of course on the demand for a given picture; perhaps one hundred, two hundred.

1354 *William C. Ballard, Jr.—For Plaintiff—Recalled—Rebuttal—Cross.*

XQ416. It might be two hundred or more? A. Yes.

XQ417. And in making these two hundred or more positives you would have to use the two pasted together negatives of Fig. 1 of the patent? A. Yes.

Mr. Ward: You are assuming in that question that alternative form is going to
1355 be used where they are pasted together?
Mr. Ashton: Yes.

XQ418. You also stated that the lengths of a take might be very short, maybe one hundred feet. You are familiar with the statement of defendant in this case in which they stated that the film is developed in one continuous strip, are you not? A. Yes.

XQ419. And that might be many thousands of feet? A. It is of course possible to obtain a film of any given length by taking and connecting to-
1356 gether a large number of short pieces. Yes; of course, that is true.

XQ420. And that is the practice of defendant, is it not? A. I so understand by some stipulalation. It is a statement, it isn't a stipulation.

XQ421. You find disclosed in the Craig patent, do you not, the recording of sound and pictures on separate films? A. In the negative process, recording of sound negatives and picture negatives on separate film, yes.

XQ422. And you also find in that process that these two negative films developed separately are printed on one film? A. On the opposite sides of a single film.

1357

XQ423. On one film? A. Obviously it must be one film, if it is the opposite sides of it.

XQ424. And in Fig. 8 of the Craig patent there are two records side by side on the same film, are they not? A. I understand these to be two sound records of the same character, made according to the infra-red ray process.

XQ425. There are two records on that film, are there not? A. Two sound records.

XQ426. And does not Craig say that there may be more than two? A. I am not sure of that; I cannot answer the question without having read through the entire specification. Perhaps you can refer me to where that is stated. (Examining patent.) I believe that is a true statement, more than two sound records on one side of the film, yes.

1358

XQ427. You haven't ever heard of the Gaumont process which Mr. Jones mentioned in his testimony in which certain infra red or X-rays are used in a process such as is proposed by Craig?

1359

Mr. Ward: I object to that as an incorrect statement of Mr. Jones' testimony. He did not say anything about infra red rays being used.

XQ428. The process as described by Mr. Jones, Professor Ballard? A. I have no knowledge of it other than the published description in the British publication.

XQ430. It might have been used for all you know? A. There is no indication in the British

1360 publication that it was used, and I might point out at this time this is not a thing which involves the use of infra red rays, as does the Craig patent.

XQ431. I will ask you to refer to the Reimer patent. Reimer discloses, does he not, two separate records, one sound and pictures? A. Yes, he discloses a photographic recording and phonographic record.

1361 XQ432. And he combines both of these onto one medium, does he not? A. I do not take it that he does propose to do so. The system, as I understand it, is merely the pasting or the joining of the two together. They are not combined in the sense that they appear on the same homogeneous medium.

XQ433. Does not the claim of the patent state: "Process for making of a film which consists of an image band and a sound band having the distinctive feature that each band is made as an individual band separately and that both bands
1362 are thereupon combined with each other"? A. That is a correct statement. By combined, as explained in the specification, I understand that the two are joined together by any means *per se.*

XQ434. They are combined to make a single record, are they not? A. Two separate records cemented together, yes.

XQ435. When you are all through, you have a single record, have you not? A. I would not say that was a single record, no.

Re-direct Examination by Mr. Ward:

RDQ436. Is there anything in this British Gaumont article that Mr. Ashton asked you about

which suggested to you or suggests that Gaumont process had ever been used? A. There is nothing in the article, as I remember it, which would suggest that it was commercially feasible or had ever been used.

Mr. Ward: I offer in evidence certified copy of Vogt, *et al.*, German application as filed, No. V-16634, IX, 57a-2 filed April 2, 1919, as Plaintiff's Exhibit 32. 1364

(Marked Plaintiff's Exhibit 32 in evidence.)

Mr. Ward: With a translation, and the understanding is that the translation is accepted, subject to error, if any be found.

Mr. Neave: Yes.

Mr. Ward: It is agreed that these applicants of the German application, Joseph Massolle, Joseph Engl and Hans Vogt, are the same three applicants as in the other application in those names, and that they are each citizens of Germany and 1365 were at that time.

I offer in evidence certified copy of file wrapper and contents of Vogt, *et al.*, now abandoned, U. S. Application Serial No. 458,636, filed April 4, 1921, as Plaintiff's Exhibit 33.

(Received and marked Plaintiff's Exhibit 33 in evidence.)

Mr. Ward: I would like to offer in evidence a certified copy of decision of the State Superior Court, I of Berlin, in the case of Tonbild vs. Klang-film regarding

1366 *Case.*

Vogt, *et al.*, Germany patent 368,383, also a translation of that decision. That is a decision involving, as I understand it, a motion for permanent injunction brought in Germany under the German patent corresponding to the one in suit.

Mr. Neave: I object to that. It has no relevancy to this case. If that goes in, we will have to get in a whole lot more papers explaining that.

1367 As I understand it, in Germany, that a patent is valid if it had not been attacked a certain length of time, and not having been attacked a certain length of time, they get a preliminary injunction I object to that as not having any purpose in here.

Mr. Ward: This decision construes the British Bullis patent, and I think it has a great deal more relevancy than Mr. Neave's British File Wrapper and contents of a British patent.

The Court: If you are going to put that
1368 in, you have to put in the law which is not controlling, at any rate. I think I wrote on that, that it was not controlling, but that the decisions of foreign courts were entitled to respectful consideration. But that is only true when the law is put in evidence at the same time, because the law is quite different with reference to French and to German patents and to British patents, even, than the United States.

If it goes in, then they must be allowed to put in the law to show me what Germany does.

Mr. Ward: I have no objection to that.

1369

The Court: They have a right to show foreign litigations. They are not controlling, but they will receive respectful consideration if you want to put it in and put in the law, I will let you, because I think I am bound to consider it.

Mr. Neave: I cannot make any statement now because a lot of other papers would have to go in with it.

Mr. Ward: I am perfectly frank to state that it is my understanding that after a 1370
five-year period over there, the validity of the patent cannot be assailed. I am willing to stipulate with my opponent that that is the fact, and I merely want this decision to go in to show that *non constat* how the Court there considered the Bullis patent with respect to this disclosure in this German patent. I am not putting it up for any other purpose.

Mr. Neave: I agree with Mr. Ward's statement on that branch of the law. But here, just taking one paper out of a whole 1371
case, does not mean anything. If he has got the whole record, that will help it along.

Mr. Ward: We were precluded from getting the record because his Western Electric people are in control of the situation. I ask the Court to take this decree for what it is worth.

The Court: What have you here?

Mr. Ward: I have a decision of the Court. In a certified form.

The Court: That is, just the decision, not the papers on which it is based?

1372 *Case.*

Mr. Ward: It recites the situation very fully, and I am also prepared to hand up all the papers referred to in the decision. I have them here.

Mr. Neave: The Bullis patent you are talking about is not this American patent you have here?

Mr. Ward: The corresponding British Bullis patent. Will your Honor take this decree for what it is worth?

1373 The Court: Is the law conceded on that?

Mr. Neave: On that one point.

The Court: I will let him put it in and give you a chance to meet it, whatever time you want.

(Recision marked Plaintiff's Exhibit 34 in evidence.)

Mr. Ward: I also offer in evidence photostat of article of H. B. Marvin, of the General Electric Company in Transactions of S. M. P. E. for April, 1928, referred to in said German court decision.

1374 Mr. Neave: Same objection.

The Court: But it is not certified.

Mr. Ward: We have a stipulation covering that situation.

Mr. Neave: All right. That stipulation seem sto be broad enough to cover it.

(Marked Plaintiff's Exhibit 35 in evidence.)

Mr. Ward: Also photostatic copy of British patent to Bullis, No. 105,589, referred to in said decision.

(Marked Plaintiff's Exhibit 36 in evidence.)

Mr. Ward: I also offer in evidence as

Case.

Plaintiff's Exhibit 37, a series of letters between Mr. Schroeder and the American Telephone & Telegraph Company— 1375

Mr. Neave: State who Schroeder was.

Mr. Ward: Schroeder was the American representative at that time of the Tri-Ergon, A. G., of Zurich; and letters from my then firm to Mr. L. F. Morehouse, Department of Development and Research of the American Telephone & Telegraph Company, which were signed by Mr. Dyer 1376
Smith, then a member of the firm, letters from the American Telephone & Telegraph Company having been signed by Mr. Morehouse, the letters extending over a period from about September 8, 1925, to about August 4, 1926. And in connection with it, I call the Court's attention to paragraph 5-A of the letter from Ward, Crosby & Smith to Mr. Morehouse, dated October 29, 1925, which mentions the German patent corresponding to the application of the patent in suit under Item 5-A on page 2. 1377

(Marked Plaintiff's Exhibit 37 in evidence.)

Mr. Ward: I offer in evidence as Plaintiff's Exhibit 38 the article in the American Cinematographer as sent by the Schroeder letter of September 8, 1925, to the American Telephone & Telegraph Company.

(Marked Plaintiff's Exhibit 38 in evidence.)

Mr. Ward: Is it agreeable to you to stipulate that the American Telephone &

1378 Telegraph Company is the parent company of the Western Electric Company?

Mr. Neave: A. T. & T. owns nearly all the Western Electric stock and the Western Electric Company owns Electrical Research Products.

Mr. Ward: And the Bell Laboratories is also a subsidiary of the American Telephone & Telegraph?

Mr. Neave: Half a subsidiary of the
1379 A. T. & T. and half a subsidiary of Western.

Mr. Ward: I would like to ask Mr. Neave if he is willing to stipulate that the decision in this suit will be *res adjudicata* as against the Western Electric and its affiliates?

Mr. Neave: I could not see that any stipulation on my part would change the situation. As a matter of record here, the record shows that the Electrical Research Products is defending this suit, so that
1380 your decree goes as far as your record goes.

Mr. Ward: I have had some experience in these things, and I would like to know if you will agree to stipulate that the Western Electric and its affiliates may be subject to the process of this court, and injunction of this court.

Mr. Neave: I will stipulate nothing about that. If you want any more facts on the record, you can have them. I think you have got all the facts.

Mr. Ward: That will cut both ways,

1381

your Honor. He declines to have the Western Electric family abide by the decision of the court, except insofar as the decision of the court may control in view of the fact that they defend.

Mr. Neave: I offer in evidence the original of page of the publication of Film Kurier of February 6, 1932, together with a translation, this being an article by Hans Vogt, one of the applicants for the patent in suit.

1382

Mr. Ward: I object to this as wholly irrelevant and immaterial. As I pointed out here before this man is no longer in our employ or control.

The Court: He was one of the applicants.

Mr. Ward: And I understand that he is somewhat under the control of our opponents here now, and as I understand it, this article is the article that Mr. Neave referred to where this man says that he invented the whole thing. It is a self-serving declaration by the defendant's interests and has no relevancy at all.

1383

The Court: I will take it.

(Marked Defendant's Exhibit R in evidence.)

ORDER.

The record in this case having been left open for the purpose of permitting defendant to introduce evidence in connection with the decision

1384 *Case.*

of the State Superior Court I of Berlin in the case of *Tonbild-Syndikat Aktien-Ges.* vs. *Klangfilm G. m. b. H.*, Plaintiff's Exhibit No. 34, it is, upon the attached stipulation, Ordered,

1. That the certified record in the said suit and the translation thereof, heretofore submitted to plaintiff's counsel, may be received in evidence and shall be marked by the Clerk as Defendant's Exhibit S.

1385 2. That the reporter of this Court is hereby instructed to add to the transcript of the record herein a copy of this order and a copy of the stipulation of the parties annexed hereto.

Dated, January 10, 1933.

(Signed) MARCUS B. CAMPBELL,
United States District Judge.

STIPULATION.

1386 It is stipulated by and between the parties hereto, for the purposes of this suit only, as follows:

1. That under the provisions of the German Patent Law the validity of a German patent cannot be attacked in a patent infringement suit. This stipulation shall not estop plaintiff from arguing that the scope of a German patent can be adjudicated or determined in a patent infringement suit.

2. That under the provisions of the German Patent Law the validity of a German patent can

1387

only be attacked by nullity proceedings instituted in the German Patent Office.

3. That no nullity proceedings were ever filed against German patent No. 368,383.

4. That under the provisions of Section 28, paragraph 3 of the German Patent Law no nullity proceedings attacking the validity of a patent can be instituted after the expiration of five years from the date of publication (Ausgegeben date) of the patent.

1388

5. That the period during which nullity proceedings could have been instituted against German patent No. 368,383, Defendant's Exhibit L, expired on February 2, 1928, which is prior to the commencement on February 6, 1928, of the suit of *Tonbild-Syndikat Aktien-Ges.* vs. *Klangfilm G. m. b. H.*, which suit is further identified in Plaintiff's Exhibit 34 and Defendant's Exhibit S herein.

6. That the preliminary injunction in the said suit of *Tonbild-Syndikat Aktien Ges.* vs. *Klangfilm G. m. b. H.*, above referred to was granted under Sections 936 and following sections of the German Code of Civil Procedure without the defendant having been heard, but that as to the motion to modify said preliminary injunction (the decision upon which motion is Plaintiff's Exhibit 34) counsel for both sides filed papers and made oral arguments at the hearing.

1389

(Signed) S. Mortimer Ward, Jr.,
Counsel for Plaintiff.

(Signed) Henry R. Ashton,
Counsel for Defendant.

1390 *Case.*

ORDER.

Upon the attached stipulation it is Ordered:

That said stipulation be made a part of the record in this case, and the reporter of this Court is hereby instructed to add to the transcript of the record herein a copy of this Order and a copy of the annexed stipulation.

(Signed) MARCUS B. CAMPBELL,
1391 United States District Judge.

January 10, 1933.

STIPULATION.

IT IS STIPULATED by and between the parties hereto, for the purposes of this suit only, as follows:

1392 1. That the applicants for the following applications are the same: (a) German application V.14634 IX/57a2, filed April 2, 1919 (Plaintiff's Exh. 32); (b) United States application Ser. No. 458,636, filed April 4, 1921 (Plaintiff's Exh. 33); (c) Application for French Patent No. 532,750 ((Defendant's Exh. H); (d) German application V.16431 VI 57a2 (Plaintiff's Exh. 6); (e) United States application Ser. No. 547,860, filed March 29, 1922, for the patent in suit (contained in Plaintiff's Exh. 3).

2. That prior to 1919, Germany was and ever since has been a "Convention" country with re-

1393

spect to R. S. 4887, and its citizens since prior to 1919 have been entitled to the privileges of said statute.

3. That all of the privileges accorded by the Nolan Act of March 3, 1921 (41 St. L. 1313) were extended to citizens of Germany; and that this stipulation be made a part of the record in this case.

(Signed) WARD, CROSBY & NEAL,
Solicitors for Plaintiff.

1394

(Signed) HENRY R. ASHTON,
Counsel for Defendant.

Dated, December 29, 1932.

1395

1396 **Stipulation and Order Approving Condensed Statement of the Testimony.**

UNITED STATES DISTRICT COURT,

EASTERN DISTRICT OF NEW YORK.

AMERICAN TRI-ERGEN CORPORATION,
Plaintiff-Appellant,
vs.
1397 PARAMOUNT PUBLIX CORPORATION,
Defendant-Appellee.

Upon the annexed consent of the parties hereto, it is

Ordered that the foregoing condensed statement of the testimony, taken at the trial, is hereby approved as a true, complete and properly prepared statement of the evidence herein, to be included in the record on appeal, in accordance
1398 with Equity Rule 75.

MARCUS B. CAMPBELL,
United States District Judge.

Dated, February 13, 1934.

Consent to the entry of the foregoing order is hereby given.

Dated, January 27, 1934.

WARD, CROSBY & NEAL,
Attorneys for Appellant.
HENRY R. ASHTON,
Attorney for Appellee.

Vol. II

TRANSCRIPT OF RECORD

Supreme Court of the United States

OCTOBER TERM, 1934

No. 254

PARAMOUNT PUBLIX CORPORATION,
PETITIONER,

vs.

AMERICAN TRI-ERGON CORPORATION

ON WRIT OF CERTIORARI TO THE UNITED STATES CIRCUIT COURT OF APPEALS FOR THE SECOND CIRCUIT

PETITION FOR CERTIORARI FILED AUGUST 6, 1934.

CERTIORARI GRANTED NOVEMBER 5, 1934.

INDEX.

	PAGE
Bill of Complaint	1
Answer	10
Order dated November 18, 1932, Amending Answer	16
Order dated November 23, 1932, Amending Answer	17
Narrative and Condensed Statement of the Testimony	18
Stipulation and Order Approving Condensed Statement of the Testimony	466

PLAINTIFF'S WITNESSES.

Louis B. Hoffman:	
Direct	30
Cross	43
Recalled:	
Cross	124
William C. Ballard, Jr.:	
Direct	51
Cross	69
Re-direct	95
Re-cross	101
John M. Joy:	
Direct	104
Cross	110
Re-direct	123

DEFENDANT'S WITNESSES.

Henry Nonnenbacher:	
Direct	128
Cross	133

PAGE

Lloyd A. Jones:
Direct 134
Cross 194
Re-direct 302
Recalled:
Direct 340
Cross 341
Recalled:
Direct 386
Cross 386

Edward C. Wente:
Direct 307
Recalled:
Direct 343
Cross 344
Re-direct 375
Re-cross 379

Whitford Drake:
Direct 327
Cross 331
Re-direct 339
Re-cross 339

PLAINTIFF'S REBUTTAL WITNESSES.

William C. Ballard, Jr.:
Direct 389
Resumed:
Direct 433
Cross 447
Re-direct 454

Courtland Smith:
Direct 410
Cross 427
Re-direct 432

PLAINTIFF'S EXHIBITS.	Offd. Page	Ptd. Page
1—Vogt patent No. 1,825,598 in suit	18	467
2—Certified copy of disclaimer with respect to Claims 6 and 7 of the patent in suit	19	472
3—Certified copy of File Wrapper and contents of application for patent in suit	19	475
4—Certified copy of decision of Examiners of Interferences in the Interference No. 53,103	19	567
4-A—Certified copy of decision of the Board of Appeals, Patent Office, in same interference	19	571
5—DeForest patent involved in said interference, No. 1,489,314	20	876
6—Original German application as filed, corresponding to the application for patent in suit; being German application V16,431 VI-57,a2	20	578
Translation		581
7—Certified copy of assignment from Vogt, *et al.*, inventors of the patent in suit, to Tri-Ergon, Ltd., dated June 3, 1924	20	
8—Photostatic copy of agreement between Tri-Ergon, A.G. and Wm. Fox, dated September 4, 1928	20	
9—Photostat copy of agreement between Tri-Ergon, A.G. and Tri-Ergon Musik, dated November 8 and 15, 1926, and translation thereof	20	

	Offd. Page	Ptd. Page
10—Certified copy of an assignment from Tri-Ergon, A.G. to William Fox of certain patents, including the patent in suit	20	
11—Photostat copy of an assignment from Wm. Fox to American Tri-Ergon Corporation, of certain patents, including patent in suit	21	
12—Two combined statements (of Defendant's process) and stipulations, dated respectively November 17 and 26, 1932	21	
12-A—Strips of Defendant's film accompanying first statement	30	
13—Photostat copy of densitometer readings shown on sheet entitled "Density readings of sensitometered strips", referred to by witness Hoffmann	37	584
14—Photostat copy of gamma curve referred to by witness Hoffmann	37	585
15—Photostat copy of opacity curve referred to by witness Hoffmann	37	586
16—Work sheet from which Mr. Hoffmann figured out the reduced percentages of ingredients for two developers which he referred to ..	37	587
17—Picture strip referred to by witness Hoffmann as being developed in defendant's picture developer	38	
18—Piece of negative referred to by witness Hoffmann as developed in defendant's sound developer	38	
19—Two pictures on one sheet, lower one printed from Exhibit 18, upper one printed from Exhibit 17	39	

	Offd. Page	Ptd. Page
20—Strip of test film from which Mr. Hoffmann took the readings on Exhibit 13, readings marked sound developer	42	
21—Strip from which Mr. Hoffmann got data shown on Exhibit 13, marked picture developer	43	
22—Chart illustrating defendant's process	53	589
23—Second chart illustrating part of defendant's process	53	589
24—Photostatic copy of chart illustrating sound recording	56	590
25—Reis patent No. 1,473,976	62	591
26—French patent No. 448,757	62	924
27—British patent No. 157,433 of 1922 to Vogt	62	601
28—File wrapper of Dr. Wente's application	375	604
References cited in Wente application file	375	
28-A—Holst, No. 1,205,632		645
28-B—Tessler, No. 1,205,582		655
28-C—Hochstetter, No. 1,325,198		664
28-D—Jobke, No. 1,344,896		673
28-E—Tigerstedt, British, No. 100,748, 1919		679
28-F—Brown, *et al.*, No. 1,034,-192		683
28-G—Ulysse, No. 1,161,910		690
28-H—Dyer, *et al.*, No. 970,614		696
Greensfelder, No. 1,254,-684 (Def. Ex. G)		701
Vogt, *et al.*, British No. 178,442 (Def. Ex. N)		994
Bullis, No. 1,335,651 (Def. Ex. G)		714

	Offd. Page	Ptd. Page
29—Patent taken out by Mr. T. J. Engel and assigned to Western Electric Company, No. 1,654,926, issued January 3, 1928, on an application filed October 2, 1923 ...	375	722
30—Bullis patent No. 1,679,708	437	725
31—Craig patent No. 1,260,338	443	728
32—Certified copy of Vogt *et al.* German application as filed, No. V-14634, IX, 57a-2, filed April 2, 1919	455	738
Translation		744
33—Certified copy of File Wrapper and contents of Vogt *et al.*, now abandoned, U. S. application Serial No. 458,636, filed April 4, 1921	455	748
34—Certified copy of decision of State Superior Court, one of Berlin, in the case of Tonbild vs. Klangfilm, recording Vogt *et al.*, German patent No. 368,383	458	775
Translation		785
35—Photostat of article of H. B. Marvin, of the General Electric Co. in Transactions of S. M. P. E. for April, 1928, referred to in said German court decision	458	795
36—Photostatic copy of British patent to Bullis, No. 105,589, referred to in said decision	458	812
37—Series of letters between Mr. Schroeder and the American Telephone & Telegraph Company ...	459	822
38—Article in American Cinematographer as sent by the Schroeder letter of September 8, 1925, to American Telephone & Telegraph Company	459	842

Defendant's Exhibits.

	Offd. Page	Rtd. Page
A—Sections of the two original negatives of "The Music Master" released by Biograph Co., May 6, 1908 (Physical)	129	
B—Descriptive circular, dated May 6, 1908, for "The Music Master" sent to Biograph distributors ...	130	844
C—Composite positive print from the two negatives of Exhibit A (Physical)	132	
D—Four photomicrographs of 8000 cycle note on positive and negative emulsions developed in defendant's picture and sound formulae	157	
E—Two positive enlargements printed from the same strip of negative film and developed in defendant's picture and sound formulae	158	
F—Chart showing frequency characteristics of positive and negative emulsions	160	845
G—Binder entitled "Defendant's Book of Prior Patents"	169	

United States Patents.

Patentee		
Bendann *et al.*	No. 125,522 ..	846
Jenkins,	No. 606,993 ..	849
Walker,	No. 1,186,717 ..	852
Greensfelder,	No. 1,254,684 ..	701
Craig,	No. 1,260,337 ..	861
Messter,	No. 1,286,383 ..	873
Bullis,	No. 1,335,651 ..	714
DeForest,	No. 1,489,314 ..	876

BRITISH PATENTS.

		Offd. Page	Ptd. Page
Rossi,	No. 21,467, 1909		879
Rosenberg,	No. 23,620, 1911		883
Downing,	No. 6,727, 1913		896
Kindermann,	No. 18,163, 1913		900
Pedersen,	No. 115,942, 1918		905

GERMAN PATENTS.

Thornton,	No. 275,551, 1914		909
Translation	.....		913
Reimer,	No. 279,598, 1914		919
Translation	.....		921

FRENCH PATENT.

MacCarty,	No. 448,757, 1913		924
Translation	.....		929

H—French patent 532,750, to Vogt, *et al.*, relied upon under Section 4887 of the Revised Statutes 189 936
Translation 938

I—Certified copy of papers in DeForest v. Vogt Interference No. 53,103 (Physical) comprising:

1. Opinion of the U. S. Court of Customs and Patent Appeals, dated May 25, 1931;
2. Printed transcript of record;
3. Brief for DeForest;
4. Brief for Vogt, Massolle and Engl 193

	Offd. Page	Ptd. Page
J—Photostat of certified copy of the file wrapper and contents of De-Forest patent No. 1,489,314	193	942
K—Negatives from which the positive enlargements of Exhibit E were made (Physical)	301	
L—German patent No. 368,383 to Vogt, *et al.*, corresponding to patent in suit	305	960
Translation		961
M—Photostat of certified copy of file wrapper and contents of German patent No. 368,383	306	963
Translation		973
N—Certified copy of British Patent Office papers on British patent No. 178,442, corresponding to patent in suit, containing:		
1. Application as open to public inspection on April 15, 1922		983
2. Corresponding German application as filed in Germany		988
Translation		991
3. British patent No. 178,442, as issued		994
4. Assignment dated August 16, 1924, from Vogt, *et al.* to Tri-Ergon, A.G.	307	995
O—Diagram of Western Electric recording system	316	1000
P—Diagram of Western Electric reproducing system	326	1001
Q—Certified copy of file wrapper and contents of Craig patent No. 1,260,337	385	1002

	Offd. Page	Ptd. Page
Q-1—Haines British patent, No. 18,057 of 1906, referred to in Craig file wrapper, Exhibit Q	386	1074
R—Article by Hans Vogt in Film Kurier of February 6, 1932	461	1087
Translation		1089
S—Decision in Tonbild-Syndikat Aktien-Ges. vs. Klangfilm G.m.b.H.	462	1092
Translation		1140

	PAGE
Opinion, Campbell, D. J.	1173
Final Decree	1208
Stipulation as to Findings of Fact and Conclusions of Law	1210
Petition for Appeal	1211
Order Allowing Appeal and Supersedeas	1212
Stipulation as to Bond, etc.	1213
Assignment of Errors	1214
Note as to Citation	1216
Stipulation and Order as to Certain Exhibits	1217
Stipulated Praecipe	1218
Stipulation as to Argument	1221
Order Extending Time	1222
Stipulation as to Record	1223
Clerk's Certificate	1224
Proceedings in U. S. C. C. A., Second Circuit	1225
Opinion, Manton, J.	1225
Decree	1233
Petition for rehearing	1235
Defendants's Exhibit "O"—Drawing of Western Electric Recording System	1272
Order denying petition for rehearing	1273
Clerk's certificate	1273
Order allowing certiorari	1275

Sept. 29, 1931. H. VOGT ET AL 1,825,598

PROCESS FOR PRODUCING COMBINED SOUND AND PICTURE FILMS

Filed March 29, 1922

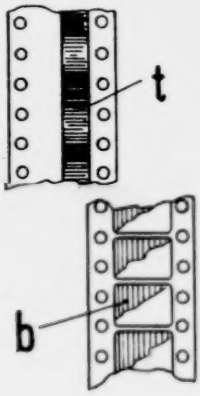

Fig. 1

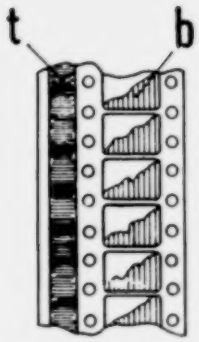

Fig. 2

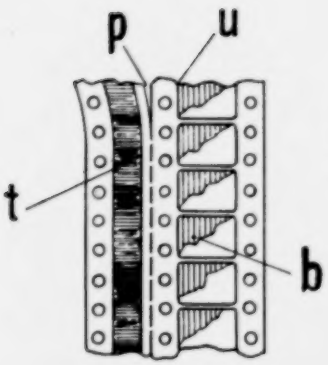

Fig. 3

INVENTOR
Hans Vogt
Joseph Massolle
Josef Engl
BY Munn & Co.
ATTORNEYS

Patented Sept. 29, 1931

UNITED STATES PATENT OFF

HANS VOGT, OF BERLIN-WILMERSDORF, JOSEPH MASSOLLE AND JOSEF E
LIN-GRUNEWALD, GERMANY, ASSIGNORS, BY MESNE ASSIGNMENTS, T
TRI-ERGON CORPORATION, OF NEW YORK, N. Y., A CORPORATION OF

PROCESS FOR PRODUCING COMBINED SOUND AND PICTURE FI

Application filed March 29, 1922, Serial No. 547,860, and in Germany April 1

This invention relates to processes for producing combined sound and motion picture films.

In the production of speaking films it is of great advantage especially from the point of view of use, to arrange the sound sequence and the picture sequence upon one and the same piece of material (film).

In this procedure, however, there frequently occur in consequence of the changing lighting conditions in the cinematographing process, changes in the degree of exposure of the silver bromide coating, and this causes the picture sequence to be either overexposed or underexposed.

As the same film, however, carries close to the picture sequence the normally exposed sound sequence, these difficulties resulting from differences in exposure cannot be remedied in the case of combined negatives, by developing practices such as by weakening, strengthening and so forth. They can only be remedied by subjecting the underexposed or the overexposed portions of the negative to separate appropriate treatments.

Technically, this treatment is practically impossible so long as the two sequences—picture and sound—are photographed upon the same film strip.

According to the present invention the difficulty is overcome by either employing entirely separate films for the simultaneous photographing of the sound and picture negatives, or films which are connected during the photographing, but which are separated from one another before the developing, then separately developing the negatives if and in the manner required to remedy the difficulties, and then printing both sequences—picture and sound—on the different portions of the same positive film.

The synchronism is assured in both cases by the perforations and/or by corresponding marks. The production of the combined positive film can take place by copying the two negative films—sound and picture—

In the drawing:

Figure 1 shows the two reco
record and the picture reco
Figure 2 shows a combined
Figure 3 shows a modifie
same.

If for the record two separ
standard perforations are us
tives are produced as shown i
sound-record comprises the r
the picture record comprises t
tures *b*. The tone row is p
ranged near one edge of the f
negatives are then copied on
as shown in Fig. 2. If for th
a common film is used, this l
the form shown in Fig. 3. T
prises between two rows of pe
picture record *b* and the sound
fore the developing. the film i
p or at *u*. If the sounds have
ed at the side of the picture r
one row of perforations. a f
the one shown in Fig. 2 is
which the picture record is bet
of perforations whilst the so
arranged at one edge of the f
side the corresponding row of

One can. however. previous
ing, unite longitudinally toge
developed negative films, and t
so united negative in the usua

Other benefits may also be
the broader aspects of the in
from employing separate or s
areas for the recording of th
picture negatives. and then
the sound and picture sequence
portions of the same positive f

In the following claims wh
is made to a "length of film"
a sound record is recorded,
of film" shall be interpreted
to a strip of film which may
tirely separate from or mere
from the film strip carrying th
quence.

While the invention has been

931. H. VOGT ET AL 1,825,598

PROCESS FOR PRODUCING COMBINED SOUND AND PICTURE FILMS

Filed March 29, 1922

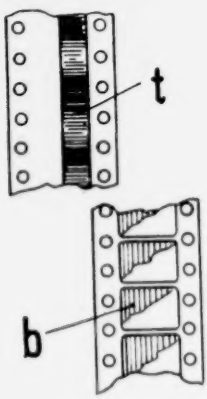

Fig. 1

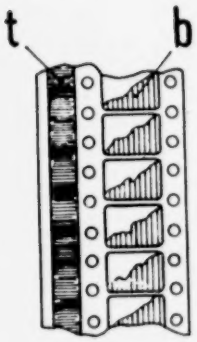

Fig. 2

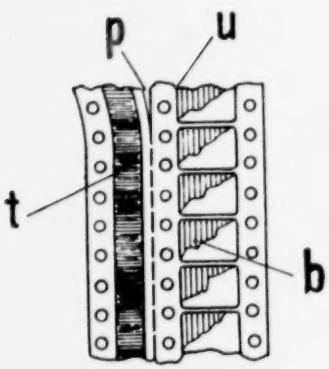

Fig. 3

INVENTOR
Hans Vogt
Joseph Massolle
Josef Engl
BY Munn & Co.

Patented Sept. 29, 1931

1,825,598

UNITED STATES PATENT OFFICE

HANS VOGT, OF BERLIN-WILMERSDORF, JOSEPH MASSOLLE AND JOSEF ENGL, OF BERLIN-GRUNEWALD, GERMANY, ASSIGNORS, BY MESNE ASSIGNMENTS, TO AMERICAN TRI-ERGON CORPORATION, OF NEW YORK, N. Y., A CORPORATION OF NEW YORK

PROCESS FOR PRODUCING COMBINED SOUND AND PICTURE FILMS

Application filed March 29, 1922, Serial No. 547,860, and in Germany April 14, 1921.

This invention relates to processes for producing combined sound and motion picture films.

In the production of speaking films it is of great advantage especially from the point of view of use, to arrange the sound sequence and the picture sequence upon one and the same piece of material (film).

In this procedure, however, there frequently occur in consequence of the changing lighting conditions in the cinematographing process, changes in the degree of exposure of the silver bromide coating, and this causes the picture sequence to be either overexposed or underexposed.

As the same film, however, carries close to the picture sequence the normally exposed sound sequence, these difficulties resulting from differences in exposure cannot be remedied in the case of combined negatives, by developing practices such as by weakening, strengthening and so forth. They can only be remedied by subjecting the underexposed or the overexposed portions of the negative to separate appropriate treatments.

Technically, this treatment is practically impossible so long as the two sequences—picture and sound—are photographed upon the same film strip.

According to the present invention the difficulty is overcome by either employing entirely separate films for the simultaneous photographing of the sound and picture negatives, or films which are connected during the photographing, but which are separated from one another before the developing, then separately developing the negatives if and in the manner required to remedy the difficulties, and then printing both sequences—picture and sound—on the different portions of the same positive film.

The synchronism is assured in both cases by the perforations and/or by corresponding marks. The production of the combined positive film can take place by copying the

In the drawing:

Figure 1 shows the two records, the sound record and the picture record, separately.

Figure 2 shows a combined record, and

Figure 3 shows a modified form of the same.

If for the record two separate films with standard perforations are used two negatives are produced as shown in Fig. 1. The sound-record comprises the row of tones *t*, the picture record comprises the row of pictures *b*. The tone row is preferably arranged near one edge of the film. The two negatives are then copied on a single film as shown in Fig. 2. If for the two records a common film is used, this has preferably the form shown in Fig. 3. This film comprises between two rows of perforations the picture record *b* and the sound record *t*. Before the developing, the film is separated at *p* or at *u*. If the sounds have to be recorded at the side of the picture record, outside one row of perforations, a film strip like the one shown in Fig. 2 is produced on which the picture record is between two rows of perforations whilst the sound record is arranged at one edge of the film strip, outside the corresponding row of perforations.

One can, however, previous to the printing, unite longitudinally together the two developed negative films, and then copy this so united negative in the usual manner.

Other benefits may also be derived from the broader aspects of the invention, i. e., from employing separate or separable film areas for the recording of the sound and picture negatives, and then printing both the sound and picture sequences on different portions of the same positive film.

In the following claims where reference is made to a "length of film" upon which a sound record is recorded, such "length of film" shall be interpreted as referring to a strip of film which may be either entirely separate from or merely separable from the film strip carrying the picture se-

PROCESS FOR PRODUCING COMBINED SOUND AND PICTURE FILMS

Filed March 29, 1922

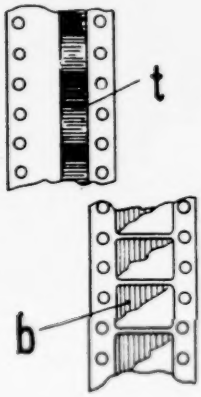

Fig. 1

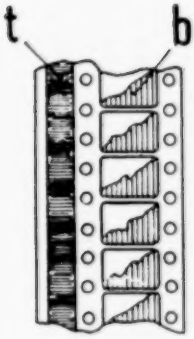

Fig. 2

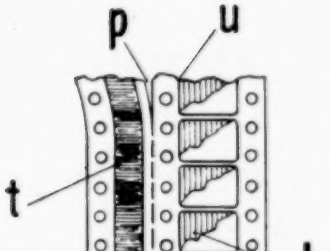

Fig. 3

INVENTOR
Hans Vogt
Joseph Massolle
Josef Engl
BY Munn & Co.
ATTORNEYS

UNITED STATES PATENT OFFICE

HANS VOGT, OF BERLIN-WILMERSDORF, JOSEPH MASSOLLE AND JOSEF ENGL, OF BERLIN-GRUNEWALD, GERMANY, ASSIGNORS, BY MESNE ASSIGNMENTS, TO AMERICAN TRI-ERGON CORPORATION, OF NEW YORK, N. Y., A CORPORATION OF NEW YORK

PROCESS FOR PRODUCING COMBINED SOUND AND PICTURE FILMS

Application filed March 29, 1922, Serial No. 547,860, and in Germany April 14, 1921.

This invention relates to processes for producing combined sound and motion picture films.

In the production of speaking films it is of great advantage especially from the point of view of use, to arrange the sound sequence and the picture sequence upon one and the same piece of material (film).

In this procedure, however, there frequently occur in consequence of the changing lighting conditions in the cinematographing process, changes in the degree of exposure of the silver bromide coating, and this causes the picture sequence to be either overexposed or underexposed.

As the same film, however, carries close to the picture sequence the normally exposed sound sequence, these difficulties resulting from differences in exposure cannot be remedied in the case of combined negatives, by developing practices such as by weakening, strengthening and so forth. They can only be remedied by subjecting the underexposed or the overexposed portions of the negative to separate appropriate treatments.

Technically, this treatment is practically impossible so long as the two sequences—picture and sound—are photographed upon the same film strip.

According to the present invention the difficulty is overcome by either employing entirely separate films for the simultaneous photographing of the sound and picture negatives, or films which are connected during the photographing, but which are separated from one another before the developing, then separately developing the negatives if and in the manner required to remedy the difficulties, and then printing both sequences—picture and sound—on the different portions of the same positive film.

The synchronism is assured in both cases by the perforations and/or by corresponding marks. The production of the combined positive film can take place by copying the two negative films—sound and picture—preferably consecutively upon the same positive film.

In the drawing:

Figure 1 shows the two records, the sound record and the picture record, separately.

Figure 2 shows a combined record, and

Figure 3 shows a modified form of the same.

If for the record two separate films with standard perforations are used two negatives are produced as shown in Fig. 1. The sound-record comprises the row of tones *t*, the picture record comprises the row of pictures *b*. The tone row is preferably arranged near one edge of the film. The two negatives are then copied on a single film as shown in Fig. 2. If for the two records a common film is used, this has preferably the form shown in Fig. 3. This film comprises between two rows of perforations the picture record *b* and the sound record *t*. Before the developing, the film is separated at *p* or at *u*. If the sounds have to be recorded at the side of the picture record, outside one row of perforations, a film strip like the one shown in Fig. 2 is produced on which the picture record is between two rows of perforations whilst the sound record is arranged at one edge of the film strip, outside the corresponding row of perforations.

One can, however, previous to the printing, unite longitudinally together the two developed negative films, and then copy this so united negative in the usual manner.

Other benefits may also be derived from the broader aspects of the invention, i. e., from employing separate or separable film areas for the recording of the sound and picture negatives, and then printing both the sound and picture sequences on different portions of the same positive film.

In the following claims where reference is made to a "length of film" upon which a sound record is recorded, such "length of film" shall be interpreted as referring to a strip of film which may be either entirely separate from or merely separable from the film strip carrying the picture sequence.

While the invention has been described in detail with respect to certain particular preferred examples thereof which give satis-

factory results, it will be understood by those skilled in the art after understanding the invention, that various changes and modifications may be made without departing from the spirit and scope of the invention and it is intended therefore in the appended claims to cover all such changes and modifications.

What is claimed as new and desired to be secured by Letters Patent is:—

1. A process for producing a combined sound and picture positive film, for talking moving pictures, comprising, photographing a sequence of pictures on one length of film, and simultaneously photographing on another length of film a corresponding sequence of sounds accompanying the action, so as to expose the last mentioned length of film variously in correspondence with vocal or other sounds having slight or otherwise varying differences of tone and intensity, developing and treating the two negatives separately, to give the picture and sound negatives the length and character of development and treatment appropriate for each, and printing from both negatives upon the same side of a single integral transparent sensitized film, the coating of which is all of the same character, to form the sound sequence at one side of, and parallel to, the picture sequence.

2. A process for producing a combined sound picture positive film, for talking moving pictures, comprising, simultaneously photographing, on parallel lengths of a single film, a sequence of pictures on the one length of film, and on the other length of film a corresponding sequence of sounds accompanying the action, so as to expose the film variously in correspondence with vocal or other sounds having slight or otherwise varying differences of tone and intensity, separating the two lengths of film, developing and treating the two negatives separately, to give the picture and sound negatives the length and character of development and treatment appropriate for each, and printing from both negatives upon the same side of a single integral transparent sensitized film, the coating of which is all of the same character, to form the sound sequence at one side of, and parallel to, the picture sequence.

3. The method of producing talking moving pictures on the same film which comprises photographing simultaneously upon separate films the picture and the sound, and photographing the sound record on an unexposed portion of the picture film.

4. The method of producing talking moving pictures on the same film which comprises photographing simultaneously upon the marginal edge and the sprocket perforations thereof.

5. A process for producing a combined sound and picture positive film, for talking moving pictures, comprising, photographing a sequence of pictures on one length of film, and simultaneously photographing on another length of film a corresponding sequence of sounds accompanying the action, separately developing the two negatives in a manner appropriate for each, and printing the sound and picture negatives respectively upon different longitudinally extending portions of the same sensitized film, to form the sound sequence at one side of and along the picture sequence.

6. A process for producing a combined sound and picture positive film, for talking moving pictures, comprising, photographing a sequence of pictures on one length of film, and simultaneously photographing on another length of film a corresponding sequence of sounds accompanying the action, so that the picture and sound negatives may be separately developed in a manner appropriate for each, and printing the sound and picture negatives respectively upon different longitudinally extending portions of the same sensitized film, to form the sound sequence at one side of and along the picture sequence.

7. A process for producing a combined sound and picture positive film, for talking moving pictures, comprising, photographing a sequence of pictures on one length of film, and simultaneously photographing on another length of film a corresponding sequence of sounds accompanying the action, so that the picture and sound negatives may be separately developed in a manner appropriate for each, and printing the sound and picture negatives respectively upon the same face of the same sensitized film at different longitudinally extending portions thereof, to form the sound sequence at one side of and along the picture sequence.

8. The method of producing a talking moving picture record on a single film which comprises photographing simultaneously upon separate films the picture and the sound to form separate negatives, photographing said negative picture record upon a portion of a sensitized film not exposed to a sound record, and photographing the negative sound record on the same face of said last film and at a portion thereof not exposed to the picture record.

9. The method of producing a talking moving picture record on a single film which comprises photographing simultaneously upon separate films the picture and the sound to form separate negatives, photographing

sound record on the same face of said last film and at a portion thereof not exposed to the picture record, said last two photographing steps being performed consecutively.

10. A process for producing a combined sound and picture positive film, for sound motion pictures, comprising, photographing a sequence of pictures on one length of film, and photographing on another length of film a corresponding sequence of sound vibrations to accompanying the action, separately developing the records of said two lengths of film in a manner appropriate for each, and printing such developed sound and picture records respectively upon different longitudinally extending portions of a single sensitized film, to form the sound sequence at one side of and along the picture sequence.

11. A process for producing a combined sound and picture positive film, for talking moving pictures, comprising, photographing a sequence of pictures on one length of film, and simultaneously photographing on another length of film a corresponding sequence of sounds accompanying the action, separately developing the records of said two lengths of film in a manner appropriate for each, and printing such developed sound and picture records respectively upon different longitudinally extending portions of a single sensitized film, to form the sound sequence at one side of and along the picture sequence.

HANS VOGT.
JOSEPH MASSOLLE.
DR. JOSEF ENGL.

CERTIFICATE OF CORRECTION.

Patent No. 1,825,598. Granted September 29, 1931, to

HANS VOGT ET AL.

It is hereby certified that error appears in the printed specification of the above numbered patent requiring correction as follows: Page 3, line 11, claim 10, for the word "accompanying" read accompany; and that the said Letters Patent should be read with this correction therein that the same may conform to the record of the case in the Patent Office.

Signed and sealed this 22nd day of December, A. D. 1931.

(Seal)

M. J. Moore,
Acting Commissioner of Patents

factory results, it will be understood by those skilled in the art after understanding the invention, that various changes and modifications may be made without departing from the spirit and scope of the invention and it is intended therefore in the appended claims to cover all such changes and modifications.

What is claimed as new and desired to be secured by Letters Patent is:—

1. A process for producing a combined sound and picture positive film, for talking moving pictures, comprising, photographing a sequence of pictures on one length of film, and simultaneously photographing on another length of film a corresponding sequence of sounds accompanying the action, so as to expose the last mentioned length of film variously in correspondence with vocal or other sounds having slight or otherwise varying differences of tone and intensity, developing and treating the two negatives separately, to give the picture and sound negatives the length and character of development and treatment appropriate for each, and printing from both negatives upon the same side of a single integral transparent sensitized film, the coating of which is all of the same character, to form the sound sequence at one side of, and parallel to, the picture sequence.

2. A process for producing a combined sound picture positive film, for talking moving pictures, comprising, simultaneously photographing, on parallel lengths of a single film, a sequence of pictures on the one length of film, and on the other length of film a corresponding sequence of sounds accompanying the action, so as to expose the film variously in correspondence with vocal or other sounds having slight or otherwise varying differences of tone and intensity, separating the two lengths of film, developing and treating the two negatives separately, to give the picture and sound negatives the length and character of development and treatment appropriate for each, and printing from both negatives upon the same side of a single integral transparent sensitized film, the coating of which is all of the same character, to form the sound sequence at one side of, and parallel to, the picture sequence.

3. The method of producing talking moving pictures on the same film which comprises photographing simultaneously upon separate films the picture and the sound, and photographing the sound record on an unexposed portion of the picture film.

4. The method of producing talking moving pictures on the same film which comprises photographing simultaneously upon separate films the picture and the sound, and photographing the sound record on an unexposed portion of the picture film between the marginal edge and the sprocket perforations thereof.

5. A process for producing a combined sound and picture positive film, for talking moving pictures, comprising, photographing a sequence of pictures on one length of film, and simultaneously photographing on another length of film a corresponding sequence of sounds accompanying the action, separately developing the two negatives in a manner appropriate for each, and printing the sound and picture negatives respectively upon different longitudinally extending portions of the same sensitized film, to form the sound sequence at one side of and along the picture sequence.

6. A process for producing a combined sound and picture positive film, for talking moving pictures, comprising, photographing a sequence of pictures on one length of film, and simultaneously photographing on another length of film a corresponding sequence of sounds accompanying the action, so that the picture and sound negatives may be separately developed in a manner appropriate for each, and printing the sound and picture negatives respectively upon different longitudinally extending portions of the same sensitized film, to form the sound sequence at one side of and along the picture sequence.

7. A process for producing a combined sound and picture positive film, for talking moving pictures, comprising, photographing a sequence of pictures on one length of film, and simultaneously photographing on another length of film a corresponding sequence of sounds accompanying the action, so that the picture and sound negatives may be separately developed in a manner appropriate for each, and printing the sound and picture negatives respectively upon the same face of the same sensitized film at different longitudinally extending portions thereof, to form the sound sequence at one side of and along the picture sequence.

8. The method of producing a talking moving picture record on a single film which comprises photographing simultaneously upon separate films the picture and the sound to form separate negatives, photographing said negative picture record upon a portion of a sensitized film not exposed to a sound record, and photographing the negative sound record on the same face of said last film and at a portion thereof not exposed to the picture record.

9. The method of producing a talking moving picture record on a single film which comprises photographing simultaneously upon separate films the picture and the sound to form separate negatives, photographing said negative picture record upon a portion of a sensitized film not exposed to a sound record, and photographing the negative

sound record on the same face of said last film and at a portion thereof not exposed to the picture record, said last two photographing steps being performed consecutively.

10. A process for producing a combined sound and picture positive film, for sound motion pictures, comprising, photographing a sequence of pictures on one length of film, and photographing on another length of film a corresponding sequence of sound vibrations to accompanying the action, separately developing the records of said two lengths of film in a manner appropriate for each, and printing such developed sound and picture records respectively upon different longitudinally extending portions of a single sensitized film, to form the sound sequence at one side of and along the picture sequence.

11. A process for producing a combined sound and picture positive film, for talking moving pictures, comprising, photographing a sequence of pictures on one length of film, and simultaneously photographing on another length of film a corresponding sequence of sounds accompanying the action, separately developing the records of said two lengths of film in a manner appropriate for each, and printing such developed sound and picture records respectively upon different longitudinally extending portions of a single sensitized film, to form the sound sequence at one side of and along the picture sequence.

HANS VOGT.
JOSEPH MASSOLLE.
DR. JOSEF ENGL.

CERTIFICATE OF CORRECTION.

Patent No. 1,825,598. Granted September 29, 1931, to

HANS VOGT ET AL.

It is hereby certified that error appears in the printed specification of the above numbered patent requiring correction as follows: Page 3, line 11, claim 10, for the word "accompanying" read accompany; and that the said Letters Patent should be read with this correction therein that the same may conform to the record of the case in the Patent Office.

Signed and sealed this 22nd day of December, A. D. 1931.

(Seal)

M. J. Moore,
Acting Commissioner of Patents.

DISCLAIMER

1,825,598.—*Hans Vogt*, Berlin-Wilmersdorf, and *Joseph Massolle* and *Josef Engl*, Berlin-Grunewald, Germany. PROCESS FOR PRODUCING COMBINED SOUND AND PICTURE FILMS. Patent dated September 29, 1931. Disclaimer filed November 23, 1932, by the assignee, *American Tri-Ergon Corporation*.

Hereby enters this disclaimer to that part of the claim which it does not choose to claim or hold by virtue of the patent or said assignments, to wit:

(*a*) The process as set forth in claim 6, except wherein the picture and sound negatives are separate films at the time of development.

(*b*) The process as set forth in claim 7, except wherein the sequence of pictures is photographed upon a film separate from that upon which the sequence of sounds is photographed, and the picture and sound negatives are separately developed, in a manner appropriate for each, and are consecutively printed upon the same sensitized film.

[*Official Gazette December 13, 1932.*]

1414

Plaintiff's Exhibit No. 2.

U. S. Patent Office

Recorded
U. S. Patent Office
Issue Division
Nov 23 1932

Nov 23 1932

Issue Division Liber 1 Page 916

DISCLAIMER.

1415

TO THE HON. COMMISSIONER OF PATENTS:

Your petitioner, American Tri-Ergon Corporation, a corporation organized and existing under the laws of the State of New York and having a place of business in the City, County and State of New York, represents that in the matter of certain improvements in Process for Producing Combined Sound and Picture Films, for which Letters Patent of the United States No. 1,825,598 were granted on September 29, 1931, to said
1416 American Tri-Ergon Corporation, as assignee by mesne assignments of the inventors, Hans Vogt, Joseph Massolle and Josef Engl, said corporation is the owner of the entire right, title and interest under an assignment dated June 6, 1930 and recorded in the Transfers of Patents of the United States Patent Office, July 3, 1930, Liber T 144, pages 192 to 199, and other assignments referred to in said assignment, and that your petitioner has reason to believe that through inadvertence and without any fraudulent or deceptive intention, the specification and claim of said Letters Patent are too broad, including that

Plaintiff's Exhibit No. 2. 1417

of which said inventors were not the first inventors. Your petitioner therefore hereby enters this disclaimer to that part of the claim which it does not choose to claim or hold by virtue of the patent or said assignments, to wit:

(a) The process as set forth in claim 6, except wherein the picture and sound negatives are separate films at the time of development.

(b) The process as set forth in claim 7, except wherein the sequence of pictures is photographed 1418
upon a film separate from that upon which the sequence of sounds is photographed, and the picture and sound negatives are separately developed, in a manner appropriate for each, and are consecutively printed upon the same sensitized film.

Signed at New York, in the County of New York, and State of New York, this 22 day of November, 1932.

AMERICAN TRI-ERGON CORPORATION 1419
By (Signed) WM. FOX
WILLIAM FOX

(Corporate Seal)

Witness:
DANIEL G. ROSENBLATT

State of New York, }
County of New York, } ss.:

On this 22 day of November, 1932, before me personally came WILLIAM FOX, to me known,

1420 *Plaintiff's Exhibit No. 2.*

who being by me duly sworn, did depose and say that he resides in Woodmere, New York; that he is the President of American Tri-Ergon Corporation, the corporation described in and which executed the foregoing instrument; that he knows the seal of said corporation; that the seal affixed is such corporate seal; that it was so affixed by order of the Board of Directors of said corporation, and that he signed his name thereto by like order.

1421

DANIEL G. ROSENBLATT
Notary Public, New York County
New York County Clk's No. 164
Reg. No. 1R238
Term expires March 30, 1934

(Notarial Seal)

1422

PLAINTIFF'S EXHIBIT No 3

DEPARTMENT OF COMMERCE
UNITED STATES PATENT OFFICE

To all persons to whom these presents shall come, Greeting:

THIS IS TO CERTIFY that the annexed is a true copy from the records of this office of the File Wrapper and Contents, in the matter of the

Letters Patent of

Hans Vogt, Joseph Massolle and Josef Engl, Assignors, by Mesne Assignments, to American Tri-Ergon Corporation,

Number 1,825,598, Granted September 29, 1931,

for

Improvement in Processes for Producing Combined Sound and Picture Films.

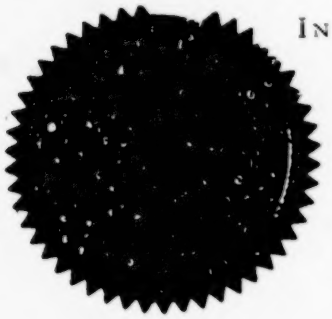

IN TESTIMONY WHEREOF I have hereunto set my hand and caused the seal of the Patent Office to be affixed, at the City of Washington, this second day of November, in the year of our Lord one thousand nine hundred and thirty-two and of the Independence of the United States of America the one hundred and fifty-seventh.

ATTEST:

J. T. Sullivan
Chief of Division.

Thomas E. Robertson
Commissioner of Patents.

11—5628
U. S. GOVERNMENT PRINTING OFFICE

1825598

NUMBER (Series of 1915), 547860

1932

(EX'R'S BOOK) 187-7

DIV. 7

PATENT No. 1825598

Names ① Hans Vogt, ② Joseph Massolle & ③ Josef Engl Assors to Tri-Ergon ~~Limited~~, Zurich, Switzerland (Cits) by mesne assigts, to American Tri-Ergon Corporation of New York, N.Y. corp of New York

of ① Berlin-Wilmersdorf & ② ③ Berlin-Grunewald

County of

State of ① ② ③ Germany

Invention Process for Producing Combined Sound Picture Films

ORIGINAL		RENEWED
Petition	Mar 29, 1922	Certificate of Correction, 192
Affidavit	" " , 1922	December 22, 1931, 192
Specification	" " , 1922	1/2/30, 192
Drawing	, 192	1/3/30, 192
Photo Copy	JUN 2 1925, 192	, 192
First Fee	$15 Mar 29, 1922	Disclaimer Filed, 192
Appl. filed complete	Mar 29, 1922	November 23, 1932, 192

Examined and Passed for Issue July 16, 1931

C. G. Harbor Exr. Div. 7

Notice of Allowance JUL 16 1931, 192 By Commissioner

Final Fee $25 Sept, 192

Patented

Attorney ~~Frumm & Co. 625 F St. N.W. City~~

Associate Attorney Ward, Crosby & Neal, 225 Broadway New York N

No. of Claims Allowed 11 Print Claim 5 in O.G. (Cl. 88-16.2)

Title as Allowed Process for Producing Combined Sound and Picture Films

Germany April 14, 1921

MAR 23 1922 C.C.U.S.PAT.OFFICE

P E T I T I O N

Case X-X 1

TO THE COMMISSIONER OF PATENTS:

Your petitioners, HANS VOGT, resident of Berlin-Wilmersdorf, Germany, JOSEPH MASSOLLE and JOSEF ENGL residents of Berlin-Grunewald, Germany, citizens of the German Republic, whose post-office Addresses are, HANS VOGT, 49 Babelsbergerstrasse, Berlin-Wilmersdorf, Germany, JOSEPH MASSOLLE. 60 Cunostrasse, Berlin-Grunewald. Germany. JOSEF ENGL 58 Hohenzollerndamm, Berlin-Grunewald, Germany, pray that Letters Patent may be granted to them for PROCESS FOR PRODUCING COMBINED SOUND and PICTURE FILMS as set forth in the annexed specification, and they hereby appoint Charles E. Munn & Orson D. Munn constituting the firm of Munn & Co. of the cities of New York, N.Y. Washington, D.C. Chicago, Ill. and San Francisco, Calif., as their Attorneys with full power of substitution and revocation, to prosecute the above-entitled application, to make alterations and amendments therein, to receive the Patent, to transact all business in the Patent Office connected therewith, and to sign their name to the drawings.

Signed at Berlin, Germany by the said Hans Vogt this 9th day of March 1922.

Hans Vogt

Signed at Berlin, Germany by the said Joseph Massolle this 9th day of March 1922.

Joseph Massolle

Signed at Berlin, Germany by the said Josef Engl this 9th day of March 1922.

Dr. Josef Engl.

TO ALL WHOM IT MAY CONCERN :

Be it known that we HANS VOGT JOSEPH MASSOLLE and JOSEF ENGL, citizens of the German Republic and residents respectively the first of Berlin-Wilmersdorf the second and third of Berlin-Grunewald, Germany, have invented a new and improved

PROCESS FOR PRODUCING COMBINED SOUND PICTURE FILMS

of which the following is a full, clear and exact description.

This invention relates to processes for producing combined sound and motion picture films.

In the production of speaking films it is of great advantage especially from the point of view of use, to arrange the sound sequence and the picture sequence upon one and the same piece of material (film).

In this procedure, however, there frequently occur in consequence of the changing lighting conditions in the cinematographing process, changes in the degree of exposure and the bromide coating of silver layer, and this causes the picture sequence to be either overexposed or underexposed.

As the same film, however, carries close to the picture sequence the normally exposed sound sequence, difficulties resulting from these differences cannot be remedied in the case of combined negatives, by developing, weakening, strengthening and so forth. They can only be remedied by subjecting the underexposed or the overexposed negative places to separate appropriate treatments.

Technically, this treatment is practically impossible so long as the two picture and sound sequences are photographed upon the same film strip.

According to the present invention the difficulty is overcome by either employing entirely separate films for the simultaneous photographing of the negatives, or films which are connected during the photographing, but which are separated from one another before the developing.

The synchronism is assured in both cases by the perforations and/or by corresponding marks. The production of the combined positive films can take place by copying the two negative films sound and picture preferably consecutively upon the same positive film.

One can however, also unite previously the two negative films longitudinally together, and then copy this so united negative in the usual manner.

We claim:

1. Process for the production of combined sound and picture films, in which the sound sequence and picture sequence positives are copied upon single film, characterised by the feature that the respective negatives have been developed separately.

2. Process for the production of combined sound and picture films according to claim 1, characterised by the feature that the photographing of the sound sequence and of the picture sequence takes place on separate films.

3. Process for the production of combined sound and picture films as set forth in claim 1, characterised by the feature that the photographing of the sound sequence and of the picture sequence takes place upon a single film and subsequently divided.

4. Process for the production of combined sound and picture films as set forth in claim 1 to 3, characterised by the feature that the negatives after development are re-united.

Hans Vogt
Joseph Massolle
Dr. Josef Engl

Witnesses:
Bruno Klarwerk
John W. Bobby

O A T H.

HANS VOGT, resident of Berlin-Wilmersdorf, Germany, JOSEPH MASOLLE and JOSEF ENGL, residents of Berlin-Grunewald, Germany, the above named petitioners being duly and severally sworn depose and say: that they are citizens of the German Republic; that they verily believe themselves to be the original, first and joint inventors of the PROCESS FOR PRODUCING COMBINED SOUND PICTURE FILMS described and claimed in the annexed specification, that they do not know and do not believe that the same was ever known or used before their invention or discovery thereof, or patented or described in any printed publication in any country before their invention or discovery thereof, or more than two years prior to the above-entitled application; or in public use or on sale in the United States for more than two years prior to this application; that said invention has not been patented in any country foreign to the United States on an application filed by them or their legal representatives or assigns more than twelve months prior to the above-entitled application; and that no application for patent on said improvement has been filed by them or their representatives or assigns in any country foreign to the United States,

except as follows:

Germany, April 14, 1921 (V. 16431 VI/57a 2)

.....James Lloyd.....

.....Joseph Marcello.....

.....Dr. Josef Engl.....

Sworn to and subscribed before me this 9th day of March 1922

C. S. Turrill

Vice Consul of the United States of America

Div. 7 Room 312 2-260 V Paper No. 2

Address only "The Commissioner of Patents, Washington, D. C." and not any official by name.

All communications respecting this application should give the serial number, date of filing, title of invention, and name of the applicant.

DEPARTMENT OF THE INTERIOR

UNITED STATES PATENT OFFICE

WASHINGTON April 14, 1922

Munn & Co.

625 F St. N. W.

Washington, D. C.

Please find below a communication from the EXAMINER in charge of the application of

H. Vogt, et al, filed Mar. 29, 1922, Process for Producing Combined Sound Picture Films, Serial No. 547,860

Thomas E. Robertson

Commissioner of Patents

As the case admits of illustration a drawing is required.

The title should be corrected in the preamble.

Claim 1 is rejected as alternative in that it refers to a plurality of claims.

Claim 2 is for a method in which the sound and picture record are made on separate films.

Claim 3 is for a method in which the records are made on the same film.

Division is required between claim 2 and claim 3, ex parte Eagle 1870 C. D. 137. Claim 1 being generic may be used with either species.

Attention is called to

Bullis 1,335,651 Mar. 30, 1920 88-16.2

W.J.W.

Examiner.

3/4

CRW/S

In re the [illegible]

HANS VOGT, [illegible]
JOSEF EN[illegible]

Process for [illegible]
Fil[illegible]

Filed March 29 [illegible]

Serial No. 5[illegible]

TO THE COMM[illegible]

SIR:-

[illegible]

1922:-

[illegible]

vention.

[illegible]

Figure [illegible] the sound [illegible]

and the picture record, separately.

Figure 2 shows a combined record, and

Figure 3 shows a modified form of the same.

A'

If for the record two separate films with standard perforation are used two negatives are produced as shown in Fig. 1. The sound-record comprises the row of tones [illegible] the picture record comprises the row of pictures b. The two negatives are then copied on a single [illegible] tone row is preferably arranged near one edge of the [illegible] for the two [illegible] a common film is used, this has [illegible] the form shown in Fig. 3. This film comprises between the rows of perforations the picture record b and the [illegible]

~~Insert B'~~ per 13

t. Before the developing, the film is separated at p or at u. If the sounds have to be recorded at the side of the picture record, outside one row of perforations, a film strip like the one shown in Fig. 2 is produced on which the picture record is between two rows of perforations whilst the sound record is arranged at one edge of the film strip, outside the corresponding row of perforations.

Erase the claims and insert:-

--Improved process for the ~~production of~~ combined sound and picture records, in which the sound record and the picture record are produced simultaneously on a single film which is then divided and the two parts developed separately, and afterwards re-united and used to print the single positive record.

A drawing is herewith filed.

According to the U.S.A. patent cited 1335651 two separate films are used. The use of separate negatives or of such negatives designed to be separated and the production of a single position record produced from these negatives has however not become known. This characteristic feature of the invention is clearly set forth in the new claim.

Allowance of the case is respectfully solicited.

Respectfully submitted,

HANS VOGT, JOSEPH MASSOLLE,
JOSEF ENGL

per, Munn & Co

Attorneys.

Washington, D.C.,

Nov. 24, 1922.

Div. 7 Room 312

Address only "The Commissioner of Patents, Washington, D. C." and not any official by name.

W Paper No. 4

DEPARTMENT OF THE INTERIOR

UNITED STATES PATENT OFFICE

WASHINGTON April 19, 1923

U. S. PATENT OFFICE APR 19 1923 MAILED

Munn & Co.

625 F St. N. W.

Washington, D. C.

Please find below a communication from the EXAMINER in charge of the application of

Vogt, Massolle and Engl, filed Mar. 29, 1922, Process for Producing Combined Sound and Picture Films, Serial #547,860

Thomas E. Robertson

Commissioner of Patents.

Case reconsidered as amended Nov. 24, 1922.

Applicants having elected to retain only claims specific to the form in which a single film is used and then cut apart, they are required to cancel Fig. 1 and restrict their specification accordingly.

The claim is rejected as not involving invention over Bullis of record. It does not involve invention to make the record on a single film instead of on two films rigidly attached together especially in view of the fact that the single film is afterwards cut apart as the parts of the united film are taken apart.

W J W

Examiner

APPLICATION ROOM
OCT 11 1923
U.S. PATENT OFFICE

Amendment B

#5

CRW/CN.

IN THE UNITED STATES PATENT OFFICE.

Re Application of :

Vogt, Massolle & Engl, : Div. 7. Room 312.

Filed March 29,1922. :

Process for Producing Combined Sound and Picture Films, :

Serial #567,860. :

U. S. Patent Office
OCT 12 1923
DIVISION VII

oooo0oooo

Hon. Commissioner of Patents,

Washington, D.C.,

Sir:-

In response to the Office Letter of April 19,1923.

In the matter inserted at the end of page 2, before "If" line 10, insert --The two negatives are then copied on a single film as shown in Fig. 2.--

Written in B'

Erase the claims and insert:--

Sub C'

1. A positive film for the simultaneous reproduction of picture and sound-phenomenae consisting of one homogenous film band on which the sound records and the picture records, made on two separate negatives and separately developed, are copied

B2

2. A positive film for the simultaneous reproduction of picture and sound-phenomenae consisting of one homogenous film band on which the sound records and the picture records are copied which have been made on a common negative, said records having been separated by cutting and the two strips of film having been developed separately.--

REMARKS

Div. 7 Room 312

DEPARTMENT OF THE INTERIOR
UNITED STATES PATENT OFFICE

WASHINGTON April 19, 1923

U. S. PATENT OFFICE
APR 19 1923
MAILED

Munn & Co.
625 F St. N. W.
Washington, D. C.

Please find below a communication from the EXAMINER in charge of the application of :

Vogt, Massolle and Engl, filed Mar. 29, 1922, Process for Producing Combined Sound and Picture Films, Serial #547,860

Thomas E. Robertson
Commissioner of Patents.

Case reconsidered as amended Nov. 24, 1922.

Applicants having elected to retain only claims specific to the form in which a single film is used and then cut apart, they are required to cancel Fig. 1 and restrict their specification accordingly.

The claim is rejected as not involving invention over Bullis of record. It does not involve invention to make the record on a single film instead of on two films rigidly attached together especially in view of the fact that the single film is afterwards cut apart as the parts of the united film are taken apart.

W J W

Examiner

OCT 11 1923 U.S. PATENT OFFICE

Amendment B

#5

CSW/CN.

IN THE UNITED STATES PATENT OFFICE.

Re Application of :

Vogt, Massolle & Engl, : Div. 7. Room 312.

Filed March 29,1922. :

Process for Producing Combined Sound and Picture Films, :

Serial #547,860. :

oooo0oooo

U. S. Patent Office
OCT 12 1923
DIVISION VII

Hon. Commissioner of Patents,

Washington, D.C.,

Sir:-

In response to the Office Letter of April 19,1923.

In the matter inserted at the end of page 2, before "If" line 10, insert --The two negatives are then copied on a single film as shown in Fig. 2.--

Written in B'

Erase the claims and insert:--

1. A positive film for the simultaneous reproduction of picture and sound-phenomenae consisting of one homogenous film band on which the sound records and the picture records, made on two separate negatives and separately developed, are copied

Sub C'

B2

2. A positive film for the simultaneous reproduction of picture and sound-phenomenae consisting of one homogenous film band on which the sound records and the picture records are copied which have been made on a common negative, said records having been separated by cutting and the two strips of film having been developed separately.--

R E M A R K S

The new claims herewith are thought to distinguish the invention from the prior art. As previously pointed out in the patent of Bullis, two separate films are

used. We employ a single film having both the sound record and the picture record thereon. To overcome the objection heretofore experienced in forming such films, as pointed out in the specification, two negatives are made and after development, they are copies on a single film, This is new so far as we are aware and it is thought we are entitled to protection for the same. Since Fig. 1 shows the negatives from which the film is made, and in view of the claims presented, it is not thought that Fig. 1 should be cancelled.

A reconsideration and early favorable action is respectfully requested.

Respectfully submitted,

VOGT, MASSOLE, AND ENGL,

By

Attorneys.

#10

MAILROOM
AUG
2
1924
U.S. PATENT OFFICE

UNITED STATES PATENT OFFICE.

HANS VOGT,
JOSEPH MASSOLLE,
JOSEF ENGL,

DOCKET DIVISION
AUG 2 1924
U.S. PATENT OFFICE

Div. 7

Room 312

Serial No. 547,860.

Filed March 29, 1922.

Process for Producing Combined Sound and Picture Films.

Hon. Commissioner of Patents,

Washington, D.C.

Sir:

The undersigned hereby revoke all previous powers of Attorney in connection with the above entitled application.

The undersigned hereby appoint Messrs. Ward, Crosby & Smith, a firm composed of S. Mortimer Ward, Jr., Gorham Crosby and Dyer Smith, (Registration No. 11657), of 233 Broadway, New York, New York, its attorneys, with full power of substitution and revocation, to prosecute said application, to make alterations and amendments therein, to receive the patent and to transact all business in the Patent Office connected therewith.

Josef Engl.

Joseph Massolle

We agree to the above revocation of our Power of Attorney.

Accepted

MAIL ROOM
SEP 27 1924
U.S. PATENT OFFICE

U. S. Patent Office
SEP 29 1924
DIVISION VII

Amendment C

#12

IN THE UNITED STATES PATENT OFFICE.

HANS VOGT,
JOSEPH MASSOLLE,
JOSEF ENGL, : Div. 7

Serial No. 547,860, : Room 312.

Filed March 29, 1922. :

Process for Producing Combined Sound and Picture Films. :

Hon. Commissioner of Patents,

Washington, D.C.

Sir:

In response to Patent Office action of October 15, 1923, please amend the above entitled application as follows:

Cancel the Claims, and substitute the following:

per D
Sub E1
per D
C1

---#1. A process for producing a ~~x~~ combined sound and picture positive film, for ~~acoustic cinematography~~ talking moving pictures, comprising, simultaneously photographing a sequence of pictures on one length of film and a corresponding sequence of ~~sounds~~ the sounds accompanying the action on another length of film, developing the two negatives separately, to give the picture and sound negatives the treatments appropriate for each, and printing from both negatives upon the same side of a single integral transparent sensitized film, the coating of which is all of the same character, to form the sound sequence at one side of, and parallel to, the picture sequence.

per D
Sub E2

---#2. A process for producing a combined sound and picture positive film, for ~~acoustic cinematography~~ talking moving pictures, comprising, simultaneously photographing, on parallel lengths of a single film, a sequence of pictures

MAILROOM AUG 2 1924 U.S. PATENT OFFICE

UNITED STATES PATENT OFFICE.

HANS VOGT,
JOSEPH MASSOLLE,
JOSEF ENGL,

DOCKET DIVISION
AUG 2 1924
U.S. PATENT OFFICE

Div. 7

Room 312

Serial No. 547,860.

Filed March 29, 1922.

Process for Producing Combined Sound and Picture Films.

Hon. Commissioner of Patents,

Washington, D.C.

Sir:

The undersigned hereby revoke all previous powers of Attorney in connection with the above entitled application.

The undersigned hereby appoint Messrs. Ward, Crosby & Smith, a firm composed of S. Mortimer Ward, Jr., Gorham Crosby and Dyer Smith, (Registration No. 11657), of 233 Broadway, New York, New York, its attorneys, with full power of substitution and revocation, to prosecute said application, to make alterations and amendments therein, to receive the patent and to transact all business in the Patent Office connected therewith.

Josef Engl

Hans Vogt

Joseph Massolle

We agree to the above revocation of our Power of Attorney.

Munn & Co

Accepted
AUG 5 1924
T. E. Robertson
Commr.

MAIL ROOM SEP 27 1924 U.S. PATENT OFFICE

U. S. Patent Office SEP 29 1924 DIVISION VII

#12

IN THE UNITED STATES PATENT OFFICE.

HANS VOGT,
JOSEF MASSOLLE,
JOSEF ENGL,

Serial No. 547,860,

Filed March 29, 1922.

Process for Producing Combined Sound and Picture Films.

Div. 7

Room 312.

Hon. Commissioner of Patents,

Washington, D.C.

Sir:

In response to Patent Office action of October 15, 1923, please amend the above entitled application as follows:

Cancel the Claims, and substitute the following:

---1. A process for producing a combined talking moving picture sound and picture positive film, for ~~acoustic cinematography~~, comprising, simultaneously photographing a sequence of pictures on one length of film and a corresponding sequence of the sound accompanying the action on another length of film, developing the two negatives separately, to give the picture and sound negatives the treatments appropriate for each, and printing from both negatives upon the same side of a single integral transparent sensitized film, the coating of which is all of the same character, to form the sound sequence at one side of, and parallel to, the picture sequence.

---2. A process for producing a combined sound and picture positive film, for talking moving pictures ~~acoustic cinematography~~, comprising, simultaneously photographing, on parallel lengths of a single film, a sequence of pictures and a corresponding sequence of the sound accompanying the action ~~sounds~~, separating the two

lengths of film, developing the two negatives [illegible] to give the picture and sound negatives the [illegible] appropriate for each, and printing from both negatives [illegible] the same side of a single integral transparent [illegible] film, the coating of which is all of the same [illegible] to form the sound sequence at one side of, [illegible] to, the picture sequence.

REMARKS: Attention is called to [illegible] one of the present attorneys, together with [illegible] inventors, Dr. Engl, with the [illegible] July 16, last. At that time the [illegible] go into the case in detail, but stated that [illegible] give it his personal attention when the [illegible] be made.

In view of the election made by the [illegible] to the form in which the negatives [illegible] single film and then cut apart, it is, of [illegible] possible to claim specifically the form in [illegible] which the negatives are made on two [illegible] 1 submitted herewith is, however, intended [illegible] generic to both of these forms, while claim [illegible] to the form previously elected. The [illegible] the election is thought not to be of [illegible] and it is believed that the election [illegible] previous attorneys because of their [illegible] American practice, the application [illegible] prosecuted from abroad. In any case [illegible] present claim 1 is properly generic.

Furthermore it will be noted that the present claims are process claims, as were the original claims, whereas the claims submitted by the last amendment and now cancelled, were in form drawn to the article. This, however, was not actually a shift from process claims to true article claims, since the so-called article claims were in effect attempts to claim the process, and the Examiner rejected the same as defining an article by the process of making it. It would seem, therefore, that there is no difficulty in this connection.

Referring now to the references, patent to Bullis seems to be closer than patent to Craig. As to the latter Craig did not print from both negatives upon the same side of a single transparent sensitized film, the coating of which is all of the same character, nor did he form the sound sequence at one side of and parallel to the picture sequence. What he was trying to do was to make a picture record on one side which would be pervious to ordinary light, and a sound sequence on the other side, in alignment therewith, which would be pervious to invisible light, such as Infra-red light. He evidently had no thought of developing his two negatives in developing baths, which would be different, and with times of development which should be different, because of the different treatments required for the sound record film and the picture film. His only object in making the two negatives on separate films was apparently convenience, in that he wanted to print on opposite sides of the positive film, and there was, therefore, no reason why the two negatives should be made on the same film, it being simpler to print on opposite sides of the positive from two different

negatives, than from negatives on a single film strip.

In regard to patent to Bullis, he does, of course, make separate negatives and develops them separately. He then, however, makes separate positives, which he either keeps separate from each other or joins them together edge to edge, if desired. If he has two separate positives synchronism between the pictures and sounds will be subject to variation because of possible breaking and rejoining of one film or the other, and because of uneven shrinking of the films, uneven wear of the sprocket holes in the films on the sprocket teeth, etc.

If, on the other hand, Bullis joins the two films together, his joint would have to be an overlapping joint or an edge to edge, or butt joint. In the specification he only speaks of an overlapping joint by cement, page 4, line 60. If this is done, the film will be considerably thickened and stiffened at the joint, both because it has the thickness of the two films where they overlap, and also because it has the thickness of the layer of cement at this point. This thickened joint would be so stiff that the film would be very likely to jump off of the sprocket teeth in going around the curve of the sprocket wheel. Also, the application of the cement to the two films may set up stresses in the films which would be very likely to cause buckling of the films. Also, the films are likely to shrink unevenly after being cemented together, which would cause further strains at the cemented joint, and this would tend to cause buckling or even breaking the joint, and cause the two films to become separated from each other at different points, which might cause lateral movement at one point with respect to the other.

Uniform and proper reproductions ~~and~~ of the sounds and pictures would be prevented by these difficulties.

If, instead of a cemented joint the overlapped films were fastened together by rivets, or clips, or the like, the same difficulties, generally speaking, would arise, and there would be the further likelihood of these fastening devices working loose and forming projections which would rattle against the sprocket teeth, etc. The patentee does not speak of the possibility of forming an edge to edge or butt joint between the two films, and this method of joining the two together is probably impractical, or less practical than the overlapping joint. It may be conceivable that the two films could be fastened together edge to edge by some form of clips, but it might be difficult to prevent relative movement between the two films in such a case. If a butt joint were effected, the film would certainly be stiffened at the points where the edges were fastened together, and this stiffening would result in the film tending to spring away from the sprocket teeth at the points where the clips pass over the sprockets, and this might cause the film actually to jump off of the sprockets at such points. Furthermore these clips would rattle over the sprockets and might cause strain on the film by catching against the ends of the sprocket teeth, unless the clips were carefully countersunk in the body of the film, the film, however, being insufficient in thickness to make this practical

It will, therefore, be seen that the process claimed in Claim 1 herein distinguishes fully from Bullis in stating that applicants print from both negatives upon the same side of a single integral transparent sensitised film.

While this may not seem a large matter, after the step has been taken, it should nevertheless be noted that the taking of this step makes the difference between failure and success in this instance, since Bullis' construction is obviously practical. What applicants have done amounts to invention, and to more than something which would be obvious to the traditional man skilled in the art, as is instanced by the fact that Bullis did not see the necessity of printing the two records on the one film, and none of the other workers in this field have apparently seen this necessity. The Bullis application was filed nine years ago, and his patent has been out for a number of years.

Claim 2 submitted herewith is specific to the form of process in which the negatives are made simultaneously side by side on parallel portions of a single film, which is then separated lengthwise, the two negatives developed, etc., the same as in the other case. This is specifically novel and the advantage is attained that the two negatives are necessarily in exact synchronism. The claim additionally has the same distinctions as Claim 1 already discussed.

In further reference to Claim 1, it will be evident that the two references, Bullis and Craig, cannot be combined together to anticipate the claim, since they are manifestly of such a character that it is impossible to combine the two. Furthermore the claim distinguishes in various limitations from both of the references. It is believed that applicants have made an advance in the art of considerable practical value, and that in view of the

[illegible] novelty, of the process, and the [illegible] practical procedure has for the first [illegible] involving the separate development [illegible] of the two films, and their combination [illegible] invention is clearly [illegible] Accordingly, an allowance is requested.

Respectfully submitted,

HANS VOGT,
JOSEPH MASSOLLE,
JOSEF ENGL

By Ward, Crosby and Smith
Their Attorneys.

[illegible] Broadway,

[illegible], N.Y. U.S.A.

[illegible], 1954.

Div. 7 Room 312 — 2 — AKF/AH — Paper No. 13.

Address only "The Commissioner of Patents, Washington, D. C." and not any official by name.

DEPARTMENT OF THE INTERIOR
UNITED STATES PATENT OFFICE

WASHINGTON January 26, 1925.

PATENT OFFICE, JAN 26 1925 MAILED

Ward, Crosby & Smith
233 Broadway
New York City.

Please find below a communication from the EXAMINER in charge of the application of

Hans Vogt et al; Serial No. 547,860; filed March 29, 1922;
for PROCESS FOR PRODUCING COMBINED SOUND AND PICTURE FILMS.

Thomas E. Robertson
Commissioner of Patents

The amendment filed September 27, 1924 is of record.

Claims 1 and 2 are rejected on

GREENSFELDER, 1,254,684, Jan. 29, 1918, (88-16.2)
or MASSOLLE (Brit.), 157,751, Feb. 1921, (88-16.2)
(no drawing).

Note page 3, line 128 to page 4, line 8 and page 5, line 128 to page 6, line 4, of Greensfelder. In the device of Massolle the pictures are taken and developed separately and then reproduced upon a single film.

R. G. Parker
Examiner, Div. 7.

J.

Amendment 1 & 8

#14

APPLICATION APR 1 1925 U.S. PATENT OFFICE

U. S. Patent Office
APR 2 1925
DIVISION VII

1432

IN THE UNITED STATES PATENT OFFICE.

In re application of

Hans Vogt, Joseph Massolle and Josef Engl.

Serial No. 547,860,

Filed March 29, 1922,

Process for Producing Combined Sound and Picture Films.

Div. 7,

Room 312

New York, N. Y.,

March 31, 1925.

Hon. Commissioner of Patents,
Washington, D. C.

S i r :

In response to Patent Office action of January 26, 1925, please amend the above entitled application as follows:

Claim 1, line 2, cancel "acoustic-cinematography" and substitute - talking moving pictures - . Line 5, cancel "sounds" and substitute - the sounds accompanying the action -

Claim 2, line 2, cancel "acoustic-cinematography" and substitute - talking moving pictures - . Line 5, cancel "sounds" and substitute - the sounds accompanying the action -

Add the following claims:

special

1919 CD 65

3. The method of producing talking moving pictures on the same film which comprises photographing simultaneously upon separate films the picture and the sound, and photographing the sound record on an unexposed portion of the picture film .

pictures on the same film which comprises photographing simultaneously upon separate films the picture and the sound, and photographing the sound record on an unexposed portion of the picture film between the marginal edge and the sprocket perforations thereof.

REMARKS.

The Massolle British reference, No. 157,751, is not a patent, since the complete specification was not accepted and the application has become void as is noted on the face of the printed patent specification. This British application was filed by the same three inventors as the present application. It is available as a publication merely, and it is a publication of a date at least no earlier than February 2, 1921, on which date, according to the records in the Scientific Library, this British specification was opened to public inspection. Inasmuch as this is not a printed publication more than two years prior to the present application, it is evident that it is not a reference against it.

The Greensfelder patent, No. 1,254,684, does not simultaneously photograph the pictures and the sounds accompanying the action in the production of films for talking moving pictures. It is thought that the problems with which applicants are concerned did not arise in the case of this reference.

Further discussion of this reference seems unnecessary in view of the fact that broader claims than those

3/26

which have been contained herein are contained in patent No. 1,489,314, granted to Lee de Forest, on April 8, 1924, for Recording Sound. It appears that claims 1 and 3 of this patent can be made herein, and these claims are added hereto by the present amendment as claims 3 and 4. An interference with the said patent at an early date is requested.

Respectfully submitted,

HANS VOGT, JOSEPH MASSOLLE and JOSEF ENGL.

By Ward, Crosby and Smith
Their Attorneys

DB.AM

502

Room 312 | 2-1360 | AKF-AH | Paper No. 22.15.

Address only "The Commissioner of Patents, Washington, D. C." and not any official by name

All communications respecting this application should give the serial number, date of filing, title of invention, and name of the applicant

DEPARTMENT OF COMMERCE

UNITED STATES PATENT OFFICE

WASHINGTON April 6, 1925.

Ward, Crosby & Smith
233 Broadway
New York City.

PATENT OFFICE, APR - 6 1925 MAILED

Please find below a communication from the EXAMINER in charge of the application of

Hans Vogt et al; Serial No. 547,860; filed March 29, 1922; for PROCESS FOR PRODUCING COMBINED SOUND AND PICTURE FILMS.

Thomas E. Robertson
Commissioner of Patents.

The amendment filed April 1, 1925 is of record.

Claims 1 and 2 are rejected on Craig, 1,260,337, in view of Greensfelder, 1,254,684, both of record. It is shown to be old in Craig to take separate synchronous sound and picture records simultaneously and to then reproduce these two records on a single record strip. Applicant desires to reprint both records on one side only; but this is the teaching of Greensfelder, note page 3, line 128 to page 4, line 8.

Claims 3 and 4 are rejected as not based on the disclosure of applicant. Applicant takes a sound record and a picture record and reproduces these two records on a third film. These claims, however, call for a sound record and a picture record as does applicant, but the claims then define that the sound record is reproduced on the original picture record strip which is not the method of applicant. If, however, it requires that a positive of the sound record be made and a reprint of this be taken on the original picture strip still it would not be the method outlined by applicant in his specification. The steps are clearly not the same. Referring to the case of the patentee the reference Craig cited in this action [illegible]

a reference against the claims here under consideration, and though the steps in the method of applicant and of Craig are the same yet the claims of patentee were held patentable over Craig. Therefore, it is evident that applicant cannot make the claims of the patentee as applicant does not disclose such a method in his application.

Applicant is accordingly given 30 days in which to reply to this action. Ex parte Weber & Woodford, 1919 C.D. 65; 264 O.G. 863.

F.

Examiner, Div. 7.

7 Room 312
Address only
"The Commissioner of Patents,
Washington, D. C.,"
and not any official by name

2-1360 AKF-AH Paper No. 22.15.

All communications respecting this application should give the serial number, date of filing, title of invention, and name of the applicant

DEPARTMENT OF ~~THE INTERIOR~~ COMMERCE

UNITED STATES PATENT OFFICE

WASHINGTON April 6, 1925.

Ward, Crosby & Smith
233 Broadway
New York City.

PATENT OFFICE
APR - 6 1925
MAILED

Please find below a communication from the EXAMINER in charge of the application of

Hans Vogt et al; Serial No. 547,860; filed March 29, 1922; for PROCESS FOR PRODUCING COMBINED SOUND AND PICTURE FILMS.

Thomas E. Robertson
Commissioner of Patents.

The amendment filed April 1, 1925 is of record.

Claims 1 and 2 are rejected on Craig, 1,260,337, in view of Greensfelder, 1,254,684, both of record. It is shown to be old in Craig to take separate synchronous sound and picture records simultaneously and to then reproduce these two records on a single record strip. Applicant desires to reprint both records on one side only; but this is the teaching of Greensfelder, note page 3, line 128 to page 4, line 8.

Claims 3 and 4 are rejected as not based on the disclosure of applicant. Applicant takes a sound record and a picture record and reproduces these two records on a third film. These claims, however, call for a sound record and a picture record as does applicant, but the claims then define that the sound record is reproduced on the original picture record strip which is not the method of applicant. If, however, it requires that a positive of the sound record be made and a reprint of this be taken on the original picture strip still it would not be the method outlined by applicant in his specification. The steps are clearly not the same. Referring to the case of the patentee the reference Craig cited in this action was held not to be

a reference against the claims here under consideration, and though the steps in the method of applicant and of Craig are the same yet the claims of patentee were held patentable over Craig. Therefore, it is evident that applicant cannot make the claims of the patentee as applicant does not disclose such a method in his application.

Applicant is accordingly given 30 days in which to reply to this action. Ex parte Weber & Woodford, 1919 C.D. 65; 264 O.G. 863.

F.

Examiner, Div. 7.

MAIL ROOM APR 22 1925 U.S. PATENT OFFICE

U. S. Patent Office APR 23 1925 DIVISION VII

Amendment

16

IN THE UNITED STATES PATENT OFFICE.

In re application of
HANS VOGT, JOSEPH MASSOLLE,
and JOSEF ENGL,

Serial No. 547,860, Div. 7,

Filed March 29, 1922, Room 312.

Process for Producing Combined Sound and Picture Films.

New York, N.Y.,

April 17, 1925.

Hon. Commissioner of Patents,
Washington, D. C.

S i r :

In response to Patent Office action of April 6, 1925, please amend the above entitled application as follows:

Claim 1, cancel from the beginning of line 1 through the words "appropriate for each" in line 7, and substitute the following:

- A process for producing a combined sound and picture positive film, for talking moving pictures, comprising, photographing a sequence of pictures on one length of film, and simultaneously photographing on another length of film a corresponding sequence of sounds accompanying the action, so as to expose the last mentioned length of film variously in correspondence with vocal or other sounds having slight or otherwise varying differences of tone and intensity, developing and treating the two negatives separately, to give the picture and sound negatives the length and character of development and treatment appropriate for each, a

Claim 2, cancel from the beginning of line 1 through the words "appropriate for each" in line 8, and substitute the following:

- X. A process for producing a combined sound picture positive film, for talking moving pictures, comprising, simultaneously photographing, on parallel lengths of a single film, a sequence of pictures on the one length of film, and on the other length of film a corresponding sequence of sounds accompanying the action, so as to expose the film variously in correspondence with vocal or other sounds having slight or otherwise varying differences of tone and intensity, separating the two lengths of film, developing and treating the two negatives separately, to give the picture and sound negatives the length and character of development and treatment appropriate for each,

per S
E 2

REMARKS

Considering first the rejection of claims 1 and 2 on Craig, in view of Greensfelder. Craig does not print from both negatives on the same side of a sensitized film, the coating of which is all of the same character. What Craig was trying to do was to make a picture record on one side, which would be pervious to ordinary light, and a sound sequence on the opposite side of the film, which would be pervious to invisible light. Further, and this is an important distinc-

tion, Craig had no thought of developing his two negatives in developing baths which would be different and with times of development which should be different because of the different treatments required for the sound record film and the picture film. The only object in making the two negatives on separate films was apparently convenience in that he wanted to print on opposite sides of the positive film and it would be easier to do this when the sound and picture negatives were on separate film strips.

Greensfelder has an entirely different invention, since his object was to optically control connecting mechanisms for mechanical musical instruments, such as piano keys, drums, etc. For this purpose he provided the alternately translucent and dark portions on a reproducing film strip. By means of the selenium cell he is thus enabled to actuate, by means of selected alternately translucent and dark portions of the film strips, a variety of musical instruments, such as the keys of pianos, drums, bells,etc. Each sound mark on his film serves as an entirety to put a separate selenium cell into action to operate a different musical mechanism, such as a separate piano key. He does not at all consider any gradual differences of the darkness of the film, since he only considered throwing in or out of operation a mechanism. In applicants' case, however, the photographic sound record on the film must correspond in minute detail to the various frequencies and intensities of sound having the various overtones and shadings of, for example, the human voice.

Applicants' claims 1 and 2 have carefully been rewritten to bring out this distinction and to make perfectly clear the manner in which the two negatives are given development of different character and length. In Greensfelder there was no need of developing the sound marks and pictures in any different way from each other because of the fact that his sound marks are composed of entirely translucent rectangles, having no gradations which must be properly brought out in development. Applicants found the sound record must be developed in a quite different manner from the picture record. This is brought out in the two claims which are accordingly thought allowable. It is further noted that claim 2 distinguishes further from the art in its specific limitation in that the two negatives are simultaneously photographed on parallel lengths of a single film which is subsequently cut apart. It should, of course, also be noted that Greensfelder does not and cannot produce his so-called "sound marks" simultaneously with the pictures, whereas applicants claims call for the simultaneous photographing of the sound and pictures.

Referring now to the rejection of claims 3 and 4 as not based on applicants' disclosure: The DeForest patent No. 1,489,314 is somewhat ambiguous. It is believed that the claims in question may be susceptible to construction or interpretation and that it is possible that DeForest may subsequently urge such an interpretation of them as would cause them apparently to dominate applicants' in-

vention. The Examiner's own statement indicates that the claims may be interpreted. Not we do not contend that the claims should be interpreted so as to read upon applicants' construction, but we contend that they may be susceptible to this interpretation, and the DeForest patent having been issued, it is no longer within the province of the Examiner to limit the interpretation of these claims, this lying wholly within the province of a Court, and if DeForest should contend for such an interpretation and bring suit for infringement against applicants, and the claims should be so interpreted and upheld, applicants would have lost all rights in the matter. Further under the doctrine in Davis-Bournonville vs. Milburn, 297 F. 654, if applicants did not have a patent claiming substantially the same subject matter as these DeForest claims, applicants' patent could not even be used as prior invention, and since applicants' application was co-pending with DeForest, a patent issued on applicants' application could not be considered as prior art against DeForest. Therefore, if there is any possiblity of the DeForest claims being interpreted to read on applicants' structure, the interference should be declared and applicants allowed the privilege of contesting the question of priority with DeForest. Then if DeForest should wish to contend that his claims have such a meaning that applicants have no right to copy the same, it would be a simple matter for him to bring a motion to dissolve, in which case the construction thus placed upon the claims by him would constitute an estoppel. The decision of the Examiner that these claims

mean something different from applicants' method has, of course, no binding effect upon DeForest. Under these circumstances it is believed that all possible doubts as to the right of applicants to make these claims should be decided in applicants' favor so that the question of the interpretation of the claims may be decided inter partes.

The manner in which these claims may be construed is apparently as follows:

A. If the claims are taken absolutely literally, negatives of the sound and picture are made on separate strips and the sound negative is then printed as a positive on the picture negative. It is obvious that a picture negative would not be used for projection purposes and the claim is therefore incomplete. If a further step be added, a print is then made from this record, which would produce a picture positive and a sound negative. It does not seem likely that this is the meaning of the patentee.

B. Following the suggestion of the Examiner, the claims may mean the following. Negatives of the sound and picture are made on separate strips. A positive of the sound record is then printed on a third strip. A reprint of this sound positive is then made on the original picture producing a sound negative thereon.
negative. These two negatives would then have to be developed together, after which a positive of the two negatives on the one strip would be printed on a fourth strip to produce the combined positives. In accordance with this interpretation of the Examiner four strips would be required. Also the second step, of printing a positive of the sound record on the edge of the picture negative,
on a separate strip, which is to be reprinted as a negative, does not seem to be justified in any way from the disclosure.

The claims state that the sound record is photographed on the picture film, not that a reprint of a positive made from the sound negative is made on the picture film.

C. Another interpretation of the claims is that the two negatives are made on separate strips, after which a positive is made from the picture negative, and this is considered as the picture film. The sound negative is printed on an unexposed portion of this film. That is a process involving the use of three strips. In interpreting the claims in this way, they seem to call for the printing of the picture positive on the final strip before the sound positive is printed thereon. Applicants do not state whether they print the picture or the sound record first on the final strip or whether the order of printing these records is at all material.

The DeForest patent seems to state that it is not material which record is printed first, it being stated on page 1, lines 106 to 108, and page 2, lines 1 and 2, that the sound record is printed on the motion picture film 10, either unexposed as to the marginal edge thereof, or unexposed as to its entire surface.

If DeForest states that his motion picture film may be unexposed as to its entire surface at the moment when the sound record is printed thereon, an inference may be that the motion picture film is intended to mean the film which is adapted to carry the motion pictures and that either the sound record or the picture record may first be printed thereon and the other record printed thereafter.

It is this construction of the claims which caused applicants to copy the claims and to request an

interference. The deForest language referred to perhaps indicates that "the picture film" of the claims is "motion picture film 10" of page 1, line 106, and that this cannot be the original picture negative, since it is stated that its picture spacing may be unexposed when the sound record is printed on it. Reconsideration of the Examiner's holding that applicants have no right to make these claims is requested, and it is further requested that the proposed interference be instituted.

In regard to patentability of deForest over Craig, that is, of course, not now in issue, but only the right of applicants to make the claims. It should also be noted that it is the established Patent Office practice to declare an interference between an application and a patent, if it be held that the applicant has a right to make the claim, without considering the question of patentablity of the claim in the patent, since this was decided when the patent was issued. If applicants can make the claims, it may perhaps be presumed, for the purpose of this interference, that the Examiner so construed deForest's claim, as to make it patentable over Craig, and the claim would then be considered as similarly patentable to applicants, over Craig.

In conclusion it should be noted that little hardship will be imposed upon deForest in bringing a motion to dissolve, once the interference has been declared, if he should consider that the claims are not open to such an interpretation as to enable applicants to make the same. On the other hand, if applicants are not given the right to

enter the interference, an irreparable injury may be caused to applicants if deForest should subsequently believe that he had ground for an infringement suit against the owners of applicants' application and should contend for such a construction of the claims as would enable a charge of infringement to be made out.

Respectfully submitted,

HANS VOGT, JOSEPH MASSOLLE and JOSEF ENGL.

By Ward Crosby and Smith
Their Attorneys

DS.AM

Div. 7 Room 312
Address only "The Commissioner of Patents, Washington, D. C." and not any official by name

2-260 AKF-AH

Paper No. 27.
All communications respecting the application should give the serial number, date of filing, title of invention and name of the applicant

DEPARTMENT OF ~~THE INTERIOR~~ COMMERCE
UNITED STATES PATENT OFFICE
WASHINGTON April 27, 1925.

Ward, Crosby & Smith
233 Broadway
New York City.

PATENT OFFICE APR 27 1925 MAILED

Please find below a communication from the EXAMINER in charge of the application of
Hans Vogt et al; Serial No. 547,860; filed March 29, 1922;
for PROCESS FOR PRODUCING COMBINED SOUND AND PICTURE FILMS.

Thomas E. Robertson
Commissioner of Patents.

The amendment filed April 22, 1925 is of record.

Claim 1 is again rejected on Craig, 1,260,337, in view of Greensfelder, 1,254,684, both of record, and for reasons of record. Craig simultaneously takes a picture and a sound record and then developes them on the same film. Applicant's method varies only in that the records are reproduced on the same side of the film but this is what Greensfelder has done and as was pointed out in the last Office action. The rejection of this claim is final, ex parte Miller, 150 O.G. 837.

Claim 2 is allowed, as at present advised.

Claims 3 and 4 are again rejected as having no basis in the disclosure made by applicant as pointed out in detail in the last Office action; since applicant and patentee are not claiming substantially the same subject matter of invention there is no interference and applicant has no right to make such claims.

Applicant is accordingly given 30 days in which to appeal from the rejection of claims 3 and 4, under ex parte Webber and Woodford, 1919 C.D. 65.

enter the interference, an irreparable injury may be caused to applicants if deForest should subsequently believe that he had ground for an infringement suit against the owners of applicants' application and should contend for such a construction of the claims as would enable a charge of infringement to be made out.

Respectfully submitted,

HANS VOGT, JOSEPH MASSOLLE and
JOSEF ENGL.

By Ward Crosby and Smith
Their Attorneys

DS.AM

Div. 7 Room 312 2-260 AXF-AH Paper No. 17.

Address only
"The Commissioner of Patents,
Washington, D. C.,"
and not any official by name

All communications respecting this application should give the serial number, date of filing, title of invention, and name of the applicant

DEPARTMENT OF ~~THE INTERIOR~~ COMMERCE

UNITED STATES PATENT OFFICE

WASHINGTON April 27, 1925.

Ward, Crosby & Smith
233 Broadway
New York City.

PATENT OFFICE, APR 27 1925 MAILED

Please find below a communication from the EXAMINER in charge of the application of

Hans Vogt et al; Serial No. 547,860; filed March 29, 1922;
for PROCESS FOR PRODUCING COMBINED SOUND AND PICTURE FILMS.

Thomas E. Robertson
Commissioner of Patents.

The amendment filed April 22, 1925 is of record.

Claim 1 is again rejected on Craig, 1,260,337, in view of Greensfelder, 1,254,684, both of record, and for reasons of record. Craig simultaneously takes a picture and a sound record and then developes them on the same film. Applicant's method varies only in that the records are reproduced on the same side of the film but this is what Greensfelder has done and as was pointed out in the last Office action. The rejection of this claim is final, ex parte Miller, 150 O.G. 837.

Claim 2 is allowed, as at present advised.

Claims 3 and 4 are again rejected as having no basis in the disclosure made by applicant as pointed out in detail in the last Office action; since applicant and patentee are not claiming substantially the same subject matter of invention there is no interference and applicant has no right to make such claims.

Applicant is accordingly given 30 days in which to appeal from the rejection of claims 3 and 4, under ex parte Webber and Woodford, 1919 C.D. 65.

F.

[signature]
Examiner. Div. 7.

12000

7

Appeal to Exis-in #18

REC'D MAY 22 1925 U.S. PAT. OFFICE

MAY 23 1925 U.S. PATENT OFFICE

IN THE UNITED STATES PATENT OFFICE.

Exp

In re application of
HANS VOGT, JOSEPH MASSOLLE,
and JOSEF ENGL,

Serial No. 547,860,

Filed March 29, 1922,

Process for Producing Combined Sound and Picture Films.

Div. 7,

Room 312.

To the Commissioner of Patents,
Washington, D. C.

We hereby appeal to the Examiners-in-Chief from the decision of the Principal Examiner in the matter of our application for Letters Patent for an improvement in Process for Producing Combined Sound and Picture Films, Serial No. 547,860, filed March 29, 1922, which on April 27, 1925 was rejected the second time. The following are the points of the decision on which the appeal is taken;

1. The Examiner erred in not allowing claims 1, 3 and 4 of the above entitled application.

2. The Examiner erred in holding that claim 1 does not involve patentable invention over the references Craig and Greensfelder.

3. The Examiner erred in holding claims 3 and 4 have no basis in the disclosure made by applicants.

4. The Examiner erred in rejecting claims 1, 3 and 4 of the above entitled application.

Signed at New York City, in the County and State of New York, this 21st day of May, 1925.

HANS VOGT, JOSEPH MASSOLLE and
JOSEF ENGL.

DEPARTMENT OF COMMERCE

UNITED STATES PATENT OFFICE

Washington, D. C., JUN 2 - 1925

PATENT OFFICE JUN 2 1925 MAILED

Re. application of

Hans Vogt et al;

Serial No. 547,860;

Filed March 29, 1922;

For PROCESS FOR PRODUCING COMBINED SOUND AND PICTURE FILMS.

BEFORE THE EXAMINERS-IN-CHIEF

ON APPEAL.

EXAMINER'S STATEMENT

This is an appeal from final rejection by the Examiner of claims 1, 3, and 4.

1. A process for producing a combined sound and picture positive film, for talking moving pictures, comprising, photographing a sequence of pictures on one length of film, and simultaneously photographing on another length of film a corresponding sequence of sounds accompanying the action, so as expose the film variously in correspondence with vocal or other sounds having slight or otherwise varying differences of tone and intensity, developing and treating the two negatives separately, to give the picture and sound negatives the length and character of development and treatment appropriate for each.

incomplete

3. The method of producing talking moving pictures on the same film which comprises photographing simultaneously and upon separate films the picture and the sound, the photographing the sound record on an unexposed portion of the picture film.

4. The method of producing talking moving pictures on the same film which comprises photographing simultaneously upon separate films the picture and the sound, and photographing the sound record on an unexposed portion of the picture film between the marginal edge and the sprocket perforations thereof.

The art relied upon is:

CRAIG, 1,260,337, Mar. 26, 1918, (88-16.2);
GREENSFELDER, 1,254,684, Jan. 29, 1918, (88-16.2).

Considering claim 1:

Craig simultaneously takes separate sound and picture records. These negatives are then separately developed and

3/41

12000

$ 10 REC'D MAY 22 1925 U.S. PAT. OFFICE

IN THE UNITED STATES PATENT OFFICE.

MAY 23 1925 U.S. PATENT OFFICE

In re application of
HANS VOGT, JOSEPH MASSOLLE,
and JOSEF ENGL,

Serial No. 547,860,

Filed March 29, 1922,

Process for Producing Combined
Sound and Picture Films.

Div. 7,

Room 312.

To the Commissioner of Patents,
Washington, D. C.

We hereby appeal to the Examiners-in-Chief from the decision of the Principal Examiner in the matter of our application for Letters Patent for an improvement in Process for Producing Combined Sound and Picture Films, Serial No. 547,860, filed March 29, 1922, which on April 27, 1925 was rejected the second time. The following are the points of the decision on which the appeal is taken;

1. The Examiner erred in not allowing claims 1, 3 and 4 of the above entitled application.

2. The Examiner erred in holding that claim 1 does not involve patentable invention over the references Craig and Greensfelder.

3. The Examiner erred in holding claims 3 and 4 have no basis in the disclosure made by applicants.

4. The Examiner erred in rejecting claims 1, 3 and 4 of the above entitled application.

Signed at New York City, in the County and State of New York, this 21st day of May, 1925.

HANS VOGT, JOSEPH MASSOLLE and
JOSEF ENGL.

By Ward Crosby and Frost
Their Attorneys

DS:AM

DEPARTMENT OF COMMERCE

UNITED STATES PATENT OFFICE

Washington, D. C., JUN 2 - 1925

PATENT OFFICE JUN 2 1925 MAILED

Re. application of	
Hans Vogt et al;	BEFORE THE
Serial No. 547,860;	EXAMINERS-IN-CHIEF
Filed March 29, 1922;	ON APPEAL.
For PROCESS FOR PRODUCING COMBINED SOUND AND PICTURE FILMS.	

EXAMINER'S STATEMENT

This is an appeal from final rejection by the Examiner of claims 1, 3, and 4.

1. A process for producing a combined sound and picture positive film, for talking moving pictures, comprising, photographing a sequence of pictures on one length of film, and simultaneously photographing on another length of film a corresponding sequence of sounds accompanying the action, so as expose the film variously in correspondence with vocal or other sounds having slight or otherwise varying differences of tone and intensity, developing and treating the two negatives separately, to give the picture and sound negatives the length and character of development and treatment appropriate for each.

incomplete

3. The method of producing talking moving pictures on the same film which comprises photographing simultaneously upon separate films the picture and the sound, the photographing the sound record on an unexposed portion of the picture film.

and

4. The method of producing talking moving pictures on the same film which comprises photographing simultaneously upon separate films the picture and the sound, and photographing the sound record on an unexposed portion of the picture film between the marginal edge and the sprocket perforations thereof.

The art relied upon is:

CRAIG, 1,260,337, Mar. 26, 1918, (88-16.2);
GREENSFELDER, 1,254,684, Jan. 29, 1918, (88-16.2).

Considering claim 1:

Craig simultaneously takes separate sound and picture records. These negatives are then separately developed and

reproduced upon a single positive film on opposite sides. Applicant prefers to reproduce the sound and picture records side by side on the same surface of the film and longitudinally of the strip. Greensfelder has already taught that the sound and picture film, Fig. 5 of Greensfelder, can be obtained in just this manner. On page 5, lines 108 to page 6, lines 4 of Greensfelder is outlined applicant's method of reproduction.

Claims 3 and 4 do not read on applicant's disclosure. In the specification, page 2, last paragraph, applicant outlines his method as a taking of records on separate films and a copying of the two negative films upon a single positive. This is not what he now attempts to claim as is clear from a reading of claims 3 and 4. These claims call for a separate taking as originally, but one of the negatives, the sound for example, is reproduced on an unexposed portion of the other negative, which is the picture strip. This is a different set of steps than that originally outlined.

For these reasons it is thought that the Examiner should be upheld in the rejection.

Respectfully,

Examiner, Division 7. 3/42

EXAMINERS-IN-CHIEF
SEP 17 1925
U. S. PATENT OFFICE

Appeal No. 12000 Paper No. 21

Brief.

UNITED STATES PATENT OFFICE

Washington, D. C.

Re, Application of
Hans Vogt et al;
Serial No. 547,860;
Filed March 29, 1922;
For PROCESS FOR PRODUCING COMBINED SOUND AND PICTURE FILMS.

BEFORE THE
EXAMINERS-IN-CHIEF
ON APPEAL.

BRIEF FOR APPELLANT

The finally rejected claims 1, 3 and 4 may be divided into two groups; claim 1 is rejected on two references and claims 3 and 4 are rejected as not reading on applicants' disclosure. These claims 3 and 4 are copies from patent to DeForest 1489314, with which patent interference has been requested.

Considering first claim 1, it may first be noted that claim one as copied in the Examiner's statement June 2, 1925 is incomplete, the portion copied in the Examiner's statement being only the part substituted for the subject matter beginning line 1 and continuing through the words "appropriate for each" in line 7 of claim 1 as submitted by amendment filed September 27, 1924.

Claim 1 reads as follows:

> A process for producing a combined sound and picture positive film, for talking moving pictures, comprising, photographing a sequence of pictures on one length of film, and simultaneously photographing on another length of film a corresponding sequence of sounds accompanying the action, so as to expose the film variously in correspondence with vocal or other sounds having slight or otherwise varying differences of tone and intensity, developing and treating the two negatives separately, to give the picture and sound negatives the length and character of development and treatment appropriate for each and printing from both negatives upon the same side of a single integral transparent sensitized film, the coating of which is all of the same character, to form the sound sequence at one side of, and parallel to, the picture sequence.

This claim calls for the following steps:

a. Photographing a sequence of pictures on one length of film.

b. Simultaneously photographing on another length of film a corresponding sequence of sounds accompanying the action.

b^1. So as to expose the film variously in correspondence with vocal or other sounds having slight or otherwise varying differences of tone and intensity.

c. Developing and treating the two negatives separately to give the picture and sound negatives the length and character of development and treatment appropriate for each.

d. Printing from both negatives upon the same side of a single integral transparent sensitized film.

d^1. The coating of each is all of the same character.

d^2. To form the sound sequence at one side of and parallel to the picture sequence.

Applicants' invention relates to the production of a talking moving picture film in which the sound record, photographically produced, is on the same film with the picture record, also photographically produced. An underlying thought in the invention is that the sound and picture records require different development and treatment in order to obtain the best results. If the sound and picture records are photographed side by side upon the same strip of film, to form one negative, this strip must obviously all be developed at the same time so that the sound and picture negatives will be given the same length and character of development, after which the positive film is printed from this negative. This usual prior method was defective, as discovered by applicants herein, since the sound and picture records require different lengths of development and character of development to get the best results.

It should be understood that the photographic sound record is one in which the various tones and overtones, for

example, of a speaking or a singing voice, are represented on the film by slight variations in lines photographed on the film. This is accomplished as is well-known either by printing fine lines of slightly different lengths extending across the film or by printing lines of the same length but of varying densities, representing varying intensities of light. This latter is the form of record indicated for example in the patent of Craig referred to by the Examiner.

Whichever type of sound record is made, it is evident that very fine gradations of sound must be represented by slight differences in the photographic record thereof and that accordingly careful treatment in the development of the negative is required to bring out these gradations perfectly. If the same character of developer and same length of development are used for both the picture record and the sound record, it is now clear that either the pictures would not be uniformly developed the right way or else that the sound record would not be properly developed.

With the above understanding ofthe invention, the references cited by the Examiner may be briefly reviewed. Patent to Craig is entirely based on the idea of printing a picture record on one side of the film on one kind of emulsion coating and the corresponding sound record on the opposite side of the film on a different kind of emulsion coating. Naturally, such a combined record could not be reproduced if ordinary light passing through both the picture and the sound record was intercepted by both the sound and the picture records. Craig overcame this difficulty by having his picture record adapted to intercept rays of ordinary visible light only, while the sound record on the opposite side of the film would intercept rays of invisible, infra-red light only. That is to say, he made his photographic emulsion on one side of the film of one character, suitable for the ordinary picture record and the emulsion on the opposite side of the film

This claim calls for the following steps:

a. Photographing a sequence of pictures on one length of film.

b. Simultaneously photographing on another length of film a corresponding sequence of sounds accompanying the action.

b^1. So as to expose the film variously in correspondence with vocal or other sounds having slight or otherwise varying differences of tone and intensity.

c. Developing and treating the two negatives separately to give the picture and sound negatives the length and character of development and treatment appropriate for each.

d. Printing from both negatives upon the same side of a single integral transparent sensitized film.

d^1. The coating of each is all of the same character.

d^2. To form the sound sequence at one side of and parallel to the picture sequence.

Applicants' invention relates to the production of a talking moving picture film in which the sound record, photographically produced, is on the same film with the picture record, also photographically produced. An underlying thought in the invention is that the sound and picture records require different development and treatment in order to obtain the best results. If the sound and picture records are photographed side by side upon the same strip of film, to form one negative, this strip must obviously all be developed at the same time so that the sound and picture negatives will be given the same length and character of development, after which the positive film is printed from this negative. This usual prior method was defective, as discovered by applicants herein, since the sound and picture records require different lengths of development and character of development to get the best results.

It should be understood that the photographic sound record is one in which the various tones and overtones, for

example, of a speaking or a singing voice, are represented on the film by slight variations in lines photographed on the film. This is accomplished as is well-known either by printing fine lines of slightly different lengths extending across the film or by printing lines of the same length but of varying densities, representing varying intensities of light. This latter is the form of record indicated for example in the patent of Craig referred to by the Examiner.

Whichever type of sound record is made, it is evident that very fine gradations of sound must be represented by slight differences in the photographic record thereof and that accordingly careful treatment in the development of the negative is required to bring out these gradations perfectly. If the same character of developer and same length of development are used for both the picture record and the sound record, it is now clear that either the pictures would not be uniformly developed the right way or else that the sound record would not be properly developed.

With the above understanding ofthe invention, the references cited by the Examiner may be briefly reviewed. Patent to Craig is entirely based on the idea of printing a picture record on one side of the film on one kind of emulsion coating and the corresponding sound record on the opposite side of the film on a different kind of emulsion coating. Naturally, such a combined record could not be reproduced if ordinary light passing through both the picture and the sound record was intercepted by both the sound and the picture records. Craig overcame this difficulty by having his picture record adapted to intercept rays of ordinary visible light only, while the sound record on the opposite side of the film would intercept rays of invisible, infra-red light only. That is to say, he made his photographic emulsion on one side of the film of one character, suitable for the ordinary picture record and the emulsion on the opposite side of the film of a different character, adapted to intercept the infra-red rays used in his system of sound reproduction.Therefore,in

reproducing from his combined film he caused ordinary white light to pass through the film to reproduce the picture record and caused infra-red rays to pass through the film, to affect a selenium cell or the like to reproduce the sound record.

In order to get the sound and picture records on opposite sides of his finished positive film, the simplest and most convenient way was for him to make one negative of the sound record and another negative of the picture record, on separate film strips, so that the positive of the sound record could be printed from the one on one side of the positive film and the positive of the other could be printed in alignment therewith on the opposite side of the positive film strip.

Craig, however, had no thought of developing his two negatives in developing baths which would be different and with times of development which should be different because of the different treatments required for the sound record film and the picture film. The only object in making the two negatives on separate films was, apparently, convenience, in that he wanted to print on opposite sides of the positive film and it would be easier to do this when the sound and picture negatives were on separate film strips.

We therefore note that Craig does not have the limitation of applicants' claim 1 noted above in paragraph c[1] of developing and treating the two negatives separately to give the picture and sound negatives the length and character of development and treatment appropriate for each. Neither does he meet limitation d of printing from both negatives upon the same side of a film, nor does he print upon a film the coating of which is all of the same character, which is limitation d[1] noted above, nor does he form the

sound sequence at one side of and parallel to the picture sequence, as called for in limitation d^2.

The Examiner seems to have ignored most of the above distinctions and it is thought that the resemblances between Craig and the invention of the present application are merely superficial, applicants' invention being something quite different from that of Craig.

The Examiner attempts to combine the Craig patent with Greensfelder in order to reject this claim. Greensfelder does not make a talking moving picture at all. He makes a series of moving pictures, without simultaneously recording the voices of the actors and without simultaneously recording any sounds accompanying the action. All that he does is to record instrumental music which he thinks might suitably accompany the moving pictures. This music is not recorded simultaneously with the pictures, but is recorded by an operator who plays a piano or beats a drum, etc., at what he considers the proper times, when the moving picture record is subsequently reproduced. He has an elaborate mechanical arrangement whereby the instrument which the player operates is connected and controlled by certain mechanisms so that what he terms "Sound Marks" are produced on a film. The strip containing these sound marks is something like the perforated strip of a mechanical piano player, containing transparent lines, all of equal transparency, but of varying lengths as is shown in Fig. 5 of this patent. It is stated on page 4 of the patent beginning line 9 that a perforated roll of the music such as is used in player pianos may be made and photographed to produce his sound marks.

In reproducing the sound and pictures in his system, the light passes through the transparent portions of his sound record and serves to operate selenium cells, each of

which operates a different musical mechanism such as a separate piano key.

In his reproducing apparatus each sound mark on his film serves as an entirety to put a separate selenium cell into action to operate a different musical mechanism such as a separate piano key. The length of a sound mark varies in proportion to the duration of the sound. He does not at all consider any gradual differences of the opacity of the film. There are no gradations of light and darkness in his sound record since the latter is composed entirely of translucent and dark portions, the translucent portions all being of identically the same amount of transparency. He has nothing corresponding to applicants' sound record which as noted in limitation b^1 of the claim is made in correspondence with vocal or other sounds having slight or otherwise varying differences of tone and intensity.

In applicants' case the photographic sound record on the film must correspond in minute detail to the various frequencies and intensities of sound having the various overtones and shadings of the human voice. As has been explained, the negative of such a record must be developed carefully to bring out the slight gradations of tone. In Greensfelder on the other hand there is no need of developing the sound marks and pictures in any different way from each other because of the fact that his sound marks are composed of entirely translucent rectangles having no gradations which must be properly brought out in development. Greensfelder had no thought and had no need of giving his sound marks a different sort of development from that given to the picture negative.

Considering the limitations in applicants' claim 1, Greensfelder does not <u>simultaneously</u> photograph the sounds on a separate strip as called for in limitation b and he does

not record the sort of sounds called for by limitation b^1 and he does not give the separate development called for by limitations c, c^1. All that he does is to print his sound marks at one side of a/nd parallel to the picture record.

It is thought that these two references cannot possibly be combined but that if they are combined they still fail entirely to meet the invention covered by the claim. They do not jointly produce a combined talking moving picture film in which the components have been properly and separately developed, and which can be reproduced by ordinary light to give a reproduction of the vocal or other finely graduated sounds accompanying the actions shown in the pictures as is required in a practical talking moving picture system. Craig could not print his two records on the same side of a single integral film having an emulsion coating of the same character since his system apparently requires the pictures and sound record to be formed on emulsion coatings of different character.

Discussion of Claims 3 and 4

Referring now to the claims copied from the DeForest patent 1489314. No question of patentability or invention can be considered in connection with these claims since the same are copied from an issued patent. The only question is whether applicants' have a right to claim the invention in the language of these two claims. The present application has a priority date earlier than the filing date of the DeForest patent.

It is thought that the said two claims, as appearing in the DeForest patent, must be construed to make them mean something operative. If the claims are construed in the absolutely literal way called for by the Examiner, there is question whether the same cover an operative structure.

If as is thought the DeForest patent is somewhat ambiguous and the claims may properly be given such an interpretation as to make an operative structure which applicants' also can claim, then in that case applicants' should be allowed to copy the claims and have the questions involved decided inter-partes.

The Examiner states in his Examiner's statement of June 2, 1925, that these claims call for the simultaneous making of separate negatives of the pictures and the sounds and then the photographing of the sound record on an unexposed portion of the picture negative. That is to say, the sound negative is printed on an unexposed portion of the picture negative, which produces a sound positive on the unexposed portion of the picture negative.

film

It is obvious that a picture negative would not be used for projection purposes and the claim is therefore incomplete. If a further step be added, a print is then made from this record which would produce a picture positive and a sound negative both on the same film strip. It does not seem likely that this is the meaning of the patentee and there is nothing in the patent to indicate that this is meant.

In the Examiner's action of April 6, 1925, a suggestion is made, that a positive of the sound record might be made from the negative sound record and a reprint of this made on the original picture negative so as to get a sound negative on the same strip with the picture negative after which a positive could be made from both the sound and picture negatives. The Examiner has apparently dropped this suggestion so it need not now be discussed at length. In accordance with this theory, however, four strips of film would be required and there is nothing in the specification to indicate that the patentee meant to print a positive of his

sound record as a separate step and then reprint from this on to the picture negative. This suggestion is not at all justified in DeForest's disclosure.

Another interpretation of the claims, in accordance with which applicants' can make the claims, is that the two negatives are made on separate strips after which a positive is made from the picture negative and this is considered as the picture film. Considering applicants' claim 3 which is claim 1 of the deForest patent, all that is omitted from the claim, in this view, is the step of printing a positive from the picture negative. With this step understood, the picture positive, on which the sound negative or implied is subsequently printed, is the third strip of applicants' process, on which both the sound and picture negatives are printed.

It is reasonable to assume that this is the meaning of the claim because of the language of DeForest, page 6, lines 106-108 and page 2, lines 1 and 2. It is there stated that the sound record is printed on the motion picture film 10, which latter is either exposed as to the picture spacing 11 thereof and unexposed as to the marginal edge thereof or unexposed as to its entire surface.

When DeForest states that his motion picture film may be unexposed as to its entire surface at the moment when the sound record is printed thereon, an inference may be that the "motion picture film" is intended to mean the film which is adapted to carry the motion pictures and that either the sound record or the picture record may first be printed thereon and the other record printed thereafter.

"The motion picture film 10" referred to in the patent, page 1 line 106, seems to mean the same thing as "the picture film" in last line of the claim. It is not

seen how this can mean the negative picture film as called for by the Examiner if it is possible that this film is unexposed as to its entire surface at the time that the sound record is imprinted on the edge thereof. The sound and picture negatives have been made simultaneously and therefore the picture negative has been exposed as to the picture spacing thereof. With this construction of the claims applicants' clearly have a right to make the same.

Also note that nowhere in his specification does deForest suggest that the "motion picture film," on the edge of which he prints his sound record, is a negative picture film. See page 1,lines 45, 53-54, 68, 80,106,page 2 lines 6,16,and 25. Reference to the "standard motion picture film" would seem rather to indicate the positive film, intended for projection.

It is urged that any doubt as to the meaning of these claims should be resolved by permitting applicants' to make the same so that the interference may be declared. deForest is, of course, not bound by the interpretation which the Examiner has placed upon these claims and, if no interference is declared, he may subsequently urge such an interpretation of them as would cause them apparently to dominate applicants' invention. In such a case applicants' patent,if issued with other claims, of different scope, could not even be urged as prior invention against DeForest under the decision Davis-Bournonville vs. Milburn 297 F.854. Also since applicants' application was co-pending with DeForest a patent issued on applicants' application could not be considered as prior art against DeForest.

Therefore, if there is any possibility of the DeForest claims being interpreted to read on applicants' structure, as has been suggested above, the interference should be declared and applicants given the privilege of contesting the question of priority with DeForest. Then if DeForest should wish to contend that his claims have such a meaning that applicants have no right to copy the same, he would have the right to bring a motion to dissolve in which case the question would be decided inter-partes and a [illegible]

binding effect upon him in any subsequent litigation, whereas the decision of the Examiner in the ex-parte consideration of the present application has no binding effect upon DeForest.

In case DeForest should hold the view that his claims mean something different from that of applicants' invention, in accordance with the view of the Examiner, little if any hardship would be imposed upon him to bring a motion to dissolve an interference as suggested. On the other hand, if applicants are not given the right to enter the interference, an irreparable injury may be caused to them for reasons stated above.

It seems that the deForest claims are susceptible to such an interpretation as to permit applicants to copy the same as has been shown above in connection with the citation from the DeForest patent, page 1, lines 106 and following.

For all of the above reasons it is prayed that the decision of the Examiner be overruled and that the claims be allowed.

Respectfully submitted,

Hans Vogt, et al.

By Ward Crosby and Smith

Their attorneys.

by the Examiner if it is possible that this film is unexposed as to its entire surface at the time that the sound record is imprinted on the edge thereof. The sound and picture negatives have been made simultaneously and therefore the picture negative has been exposed as to the picture spacing thereof. With this construction of the claims applicants' clearly have a right to make the same.

Also note that nowhere in his specification does deForest suggest that the "motion picture film," on the edge of which he prints his sound record, is a negative picture film. See page 1,lines 45, 53-54, 68, 80,106,page 2 lines 6,16,and 25. Reference to the "standard motion picture film" would seem rather to indicate the positive film, intended for projection.

It is urged that any doubt as to the meaning of these claims should be resolved by permitting applicants' to make the same so that the interference may be declared. deForest is, of course, not bound by the interpretation which the Examiner has placed upon these claims and, if no interference is declared, he may subsequently urge such an interpretation of them as would cause them apparently to dominate applicants' invention. In such a case applicants' patent,if issued with other claims, of different scope, could not even be urged as prior invention against DeForest under the decision Davis-Bournonville vs. Milburn 297 F.854. Also since applicants' application was co-pending with DeForest a patent issued on applicants' application could not be considered as prior art against DeForest.

Therefore, if there is any possibility of the DeForest claims being interpreted to read on applicants' structure, as has been suggested above, the interference should be declared and applicants given the privilege of contesting the question of priority with DeForest. Then if DeForest should wish to contend that his claims have such a meaning that applicants have no right to copy the same, he would have the right to bring a motion to dissolve in which case the question would be decided inter-partes and a construction would be placed upon the claims by DeForest himself which would have a

binding effect upon him in any subsequent litigation, whereas the decision of the Examiner in the ex-parte consideration of the present application has no binding effect upon DeForest.

In case DeForest should hold the view that his claims mean something different from that of applicants' invention, in accordance with the view of the Examiner, little if any hardship would be imposed upon him to bring a motion to dissolve an interference as suggested. On the other hand, if applicants are not given the right to enter the interference, an irreparable injury may be caused to them for reasons stated above.

It seems that the deForest claims are susceptible to such an interpretation as to permit applicants to copy the same as has been shown above in connection with the citation from the DeForest patent, page 1, lines 106 and following.

For all of the above reasons it is prayed that the decision of the Examiner be overruled and that the claims be allowed.

Respectfully submitted,

Hans Vogt, et al.

By Ward Crosby and Smith

Their attorneys.

Appeal No 12000 Paper No. 22

Decision

U. S. PATENT OFFICE
EXAMINERS IN CHIEF

EGB.

OCT 14 1925

COPY MAILED

Hearing:
Sept. 17, 1925.

Appeal No. 12,000. U. S. Patent Office. Oct. 14,1925.

Before the Examiners-in-Chief, on appeal.

Application of Hans Vogt, Joseph Massolle and Josef Engl for a patent for an improvement in Process for Producing Combined Sound and Picture Films, filed Mar. 29, 1922, Serial No. 547,860.

Messrs. Ward, Crosby & Smith, attorneys for appellants.

This is an appeal from the decision of the examiner finally rejecting claims 1, 3 and 4, on the references and for the reasons of record. These claims, the invention defined thereby, the references and the disclosures therein pertinent to the claims are sufficiently set forth in the examiner's statement and need not be repeated here.

Pertinency of References and Opinion.

Considering first claims 3 and 4 which are copied from the patent to Lee de Forest, No. 1,489,314, Apr. 8, 1924, being claims 1 and 3 thereof, the examiner in his statement sets forth that in the last of page 2 of the specification appellants outline their method of photographing records on separate films and the photographing or

copying of the two negatives resulting upon a single film, the making of a positive therefrom or in the language of said paragraph "copying the two negatives consecutively upon the same positive films".

Claim 1 is more specific but fully covers and includes all that is set forth in said paragraph and is not inconsistent therewith. The examiner further states, page 2, that the above method as described

> "is not what he now attempts to claim as is clear from a reading of claims 3 and 4. These claims call for a separate taking as originally, but one of the negatives, the sound for example, is reproduced on an unexposed portion of the other negative, which is the picture strip. This is a different set of steps than that originally outlined."

This statement is believed to be in error since if we read the de Forest specification and claims correctly, de Forest in addition to photographing the picture and sound simultaneously upon separate films "photographs the sound record"(not the negative)" on an unexposed portion of the picture film"(Claim 1) or "upon an unexposed portion of the picture film" located as "between the marginal edge and the sprocket perforations thereof" (Claim 3).

Figure 3 of said patent is described as follows:

> "Fig. 3 is a diagrammatic view illustrating the principle involved in recording the sound waves photographically, in accordance with my invention, on the marginal edge of a <u>standard</u> motion picture film."

Inasmuch as the record so produced is a "standard motion picture film' we consider it is necessarily a positive, such as used in projection and reproduction of sound and not a negative as the examiner states.

The de Forest specification may be somewhat vague but in our opinion the language is sufficient as a whole to convey the idea above stated and to interpret the language as directed to the photographing by a negative upon the picture negative or upon a film which had a negative thereon(photographed or exposed),or upon which a picture negative was to be formed would be senseless. We are therefore unable to discover any good reasons why appellants cannot make these claims and are of the opinion that appellants' method as originally described fully supports this right to make them on the disclosure in their application and we so hold.

The Craig patent was cited in the prosecution of de Forest's claims 4 and 6 (now 1 and 3 which upon argument by counsel were allowed notwithstanding that the disclosure of Craig shows the production of two separate negatives, page 7, lines 92-95, and the production of a plurality of records side by side, Fig. 8, and page 7, lines 57-67. De Forest's contention was that these claims overcome the Craig patent since it was a physical impossibility for the Craig arrangement to permit the accomplishment of appellants' invention." The examiner allowed these claims which is evidence of their patentability notwithstanding that the Greenfield patent was prior art and

which shows the printing of the two positives side by side, Fig. 5, as does also the Craig patent as above set forth. Greenfelder does not photograph his negatives simultaneously. While the disclosures in these patents may tend toward a possibility of doubt as to invention being involved in the process defined by claim 1 the grant of the patent to de Forest and the lack of clear anticipation in either of the references or in their combination as to the addition or substitution of features in one not shown in the other and involving the question of invention vs. mechanical skill, we are of the opinion that claim 1 should be allowed in the absence of more pertinent and anticipatory art and appellants allowed to be placed in interference with de Forest to determine the question of priority. That this opinion is correct is believed to be confirmed by the decision of the Commissioner of Patents in **Both vs. Barr**, 200 O.G. 29:

> "Where an applicant seeks an interference with a patent, held that the claims in the application should not be rejected unless such rejection is based upon a clear anticipation,"

and Ex parte Brinkman cited therein quoting portions of Commissioner Ewing's decision wherein he held:

> "The question has been raised elsewhere as to the propriety of the refusal by this Office to grant a claim to an applicant which is the same as the claim of a patent disclosing interfering subject-matter. Without passing on this broad question, it seems to me clear that after a patent has once been granted it is not good practice to reject an applicant seeking an interference, where the rejection is based upon no clear anticipation, but the

3/57

piecing together of several patents.

* * * * * *

I therefore direct the Examiner to withdraw his rejection of claim 21 and to declare an interference with the Lewis patent."

(Page 30, 1914 C.D. p.30).

This is pertinent to the allowance of claim 1 here.

Decision.

The decision of the examiner is reversed both as to the rejection of claim 1 and appellants' right to make claims 3 and 4.

Sidney F. Smith.

Frank E. Timm.

W. S. Ruckman.

Examiners-in-Chief. 3/58

Letter to Office

23

OCT 16 1925 U.S. PATENT OFFICE

U.S. Patent Office
OCT 17 1925
DIVISION VII

IN THE UNITED STATES PATENT OFFICE

In re application of Hans Vogt, Joseph Massolle, and Josef Engl,	
Serial No. 547,860,	Div. 7,
Filed March 29, 1922,	Room 312.
Process for Producing Combined Sound and Picture Films.	

New York, N.Y.,

October 15, 1925.

Hon. Commissioner of Patents,
Washington, D. C.

S i r :

We presume that the Examiner has now noted the decision of the Board of Examiners-in-Chief of Oct. 14, 1925 allowing claim 1 and affirming the right of appellants, the applicants herein, to make claims 3 and 4.

The said claims 3 and 4 are claims 1 and 3 of patent to Lee DeForest, 1,489,314, dated April 8, 1924, Recording Sound.

The Examiner was requested by amendment filed April 1, 1925 to declare an interference with the said patent on the subject matter of said claims and this request is now repeated in view of the said decision of the Examiners-in-Chief.

Respectfully submitted,

HANS VOGT, JOSEPH MASSOLLE and
JOSEF ENGL

By Ward Cady and Smith
Their Attorneys

INTERFERENCE.

Interference No. 53103 *Paper No.* 24

Name. Hans Vogt. et al.,

Serial No. 547,860.

Title, PROCESS FOR PRODUCING COMBINED SOUND AND PICTURE FILMS.

Filed, March 29, 1922.

Interference with Lee deForest, Patent No. 1,489, 314.

DECISIONS OF

Law Examiner, ——— *Dated,* ———

Ex'r of Interferences, Favorable *Dated,* July 14/28

Board, Affirmed *Dated,* Jan 7-1930

~~*Commissioner*~~ Court, Affirmed *Dated,* May 25/31

REMARKS:

This should be placed in each application or patent involved in interference in addition to the interference letters by Primary Examiner.

Forwarded from .....7..... Div. to
Examiner of Interferences

2 13

Paper No. 25
INTERFERENCE

November 2, 1925.

DEPARTMENT OF ~~XXXXXXXXXX~~ COMMERCE

UNITED STATES PATENT OFFICE

WASHINGTON, D. C.

(Copy mailed ~~each~~
~~applicant, and~~
assignee.)

PATENT OFFICE
NOV 10 1925
MAILED

Ward, Crosby & Smith

233 Broadway

New York City.

Please find below a copy of a communication from the Examiner concerning the

application of Hans Vogt et al; Serial No. 547,860; filed March 29, 1922; for PROCESS FOR PRODUCING COMBINED SOUND AND PICTURE FILMS.

Very respectfully,

Room No. 106

ADDRESS ONLY
THE COMMISSIONER OF PATENTS
WASHINGTON D. C.

Thomas E. Robertson.

Commissioner of Patents.

53103

The case, above referred to, is adjudged to interfere with others, hereafter specified, and the question of priority will be determined in conformity with the Rules.

The statement demanded by rule 110 must be sealed up and filed on or before .....JAN 4 1926..... *, with the subject of the invention, and name of party filing it, indorsed on the envelope. The subject-matter involved in the interference is*

1. The method of producing talking moving pictures on the same film which comprises photographing simultaneously upon separate films the picture and the sound, and photographing the sound record on an unexposed portion of the picture film.

2. The method of producing talking moving pictures on the same film which comprises photographing simultaneously upon separate films the picture and the sound, and photographing the sound record on an unexposed portion of the picture film between the marginal edge and the sprocket perforations thereof.

This interference involves your application, above identified, and

A patent for Recording Sound, granted to Lee deForest, of 1415 Sedgewick Ave., New York City, on Serial No. 485,332, filed July 16, 1921, patent No. 1,489,314, dated April 8, 1924, whose attorneys are Darby & Darby, St. Paul Bldg., New York City, and whose assignee is

the DeForest Phonofilm Corporation, of Jersey City, N. J., a corp. of New Jersey.

The relation of the counts of the interference to the claims of the respective parties is as follows:

Counts	Vogt. et al.	DeForest
1	3	1
2	4	3

No other claims will be held subject to the decision in the interference.

Counts Compared.

Examiner, Div. 7.

Div. 7 Room 104 WCP/IR Paper No. 29

Address only "The Commissioner of Patents, Washington, D. C." and not any official by name

DEPARTMENT OF COMMERCE
UNITED STATES PATENT OFFICE
WASHINGTON

All communications respecting this application should give the serial number, date of filing, and name of the applicant

Please find below a communication from the EXAMINER in charge of this application

July 8, 1931

Thomas E. Robertson
Commissioner of Patents

Applicant H. Vogt et al

Ser. No. 547,860
Filed Mar. 29, 1922
For Process For Producing Combined Sound And Picture Films

Ward & Crosby & Neil
233 Broadway
New York, N.y.

MAILED
JUL 7 '31

In accordance with the provisions of Order No. 2308, dated March 12, 1917, which reads in part as follows:

> Obvious informalities in the application may be corrected by the Examiner, but said correction must be in the form of an amendment, approved by the Principal Examiner in writing, placed in the file, and made a part of the record. The changes specified in the amendment will be entered by the clerk in the regular way.

the changes, hereinafter specified, are made by the examiner in the application above identified.

Should these changes not be satisfactory to the applicant, appropriate amendment may be proposed under the provisions of Rule 78, provided the specification has not been printed.

The application has been amended as follows.

In Claim 1, to has been inserted at the end of line 6.

Examiner.

Amendment 9

#30

APPLICATION DIV
JUL 15 31
U.S. PATENT OFFICE

IN THE UNITED STATES PATENT OFFICE

In re application of	)	
HANS VOGT, et al	)	
Filed Mar. 29, 1922	)	
Serial No. 547,860	)	Div. 7, Room 104.
For: PROCESS FOR PRODUCING COMBINED SOUND AND PICTURE FILMS.	)	

U.S. PATENT OFFICE
JUL 15 1931
DIVISION VII

July 15, 1931.

Hon. Commissioner of Patents,

Washington, D. C.

Sir:

Please amend the specification as follows:

Page 1, prior to line 1 insert --This invention relates to processes for producing combined sound and motion picture films.--

Page 1, line 4, after "same" insert--piece of--; Same line cancel "separate";

Line 7, cancel "light" and substitute--exposure of--.

Line 8, cancel as far as comma (,) and substitute --the silver bromide coating--.

Line 9, change "overlighted" to --overexposed-- and "underlighted" to --underexposed--.

Line 10, cancel "bears" and substitute--carries--.

Line 11, cancel "continuously" and change "lighted" to --exposed--.

Line 12, after "these" insert--difficulties resulting from--;; after "differences" insert--in exposure--;

same line, cancel "removed" and substitute--remedied--.

Line 13, after "negatives" insert a comma (,) and after "developing" insert--practices such as by--.

Line 14, cancel "removed" and substitute--remedied--.

Line 15, cancel "lighted" and substitute --exposed--; cancel "overlighted" and substitute--overexposed portions of the --; same line, cancel "places".

Line 16, cancel "corresponding" and substitute --appropriate--, and change "treatment" to --treatments--.

Line 18, after "sequences" insert -- --picture and sound-- --.

At the end of line 19, insert --strip--.

Line 22, cancel "production" and substitute --simultaneous photographing--; same line before "negatives" insert--sound and picture--; after "negatives" insert a comma (,).

Line 24, change the period (.) to a comma (,) and add:

--when separately developing the negatives if and in the manner required to remedy the difficulties, and then printing both sequences--picture and sound-- on the different portions of the same positive film.--

Line 26, after "and" insert --or--.

Line 27, before "positive" insert--combined--.

Line 28, before "preferably" insert -- -- sound and picture-- --.

In the specification, page 2, amend the first paragraph to read as follows:

One can, however, previous to the printing, unite longitudinally together the two developed negative films, and then copy this so united negative in the usual manner.

Page 2, cancel "We claim" and substitute the following:

Other benefits may also be derived from the broader aspects of the invention, i.e., from employing separate or separable film areas for the recording of the sound and picture negatives, and then printing both the sound and picture sequences on different portions of the same positive film.

In the following claims where reference is made to a "length of film" upon which a sound record is recorded, such "length of film" shall be interpreted as referring to a strip of film which may be either entirely separate from or merely separable from the film strip carrying the picture sequence.

While the invention has been described in detail with respect to certain particular preferred examples thereof which give satisfactory results, it will be understood by those skilled in the art after understanding the invention, that various changes and modifications may be made without departing from the spirit and scope of the invention and it is intended therefore in the appended claims to cover all such changes and modifications.

What is claimed as new and desired to be secured by Letters Patent is:

Kindly amend Claim 1 by inserting in line 7 before "film", --last mentioned length of --.

Claim 2, line 5 after "and" insert--on--.

Kindly add the following new claims.

5. A process for producing a combined sound and picture positive film, for talking moving pictures, comprising, photographing a sequence of pictures on one length of film, and simultaneously photographing on another length of film a corresponding sequence of sounds accompanying the action, separately developing the two negatives in a manner appropriate for each, and printing the sound and picture negatives respectively upon different longitudinally extending portions of the same sensitized film, to form the sound sequence at one side of and along the picture sequence.

6. A process for producing a combined sound and picture positive film, for talking moving pictures, comprising, photographing a sequence of pictures on one length of film, and simultaneously photographing on another length of film a corresponding sequence of sounds accompanying the action, so that the picture and sound negatives may be separately developed in a manner appropriate for each, and printing the sound and picture negatives respectively upon different longitudinally extending portions of the same sensitized film, to fo the sound sequence at one side of and along the picture sequence.

7. A process for producing a combined sound and picture positive film, for talking moving pictures, comprising, photographing a sequence of pictures on one length of film, and simultaneously photographing on another length of film a corresponding sequence of sounds accompanying the action, so that the picture and sound negatives may be separately developed in a manner appropriate for each, and printing the sound and picture negatives respectively upon the same face of the same sensitized film at different longitudinally extending portions thereof, to form the sound sequence at one side of and along the picture sequence.

8. The method of producing a talking moving picture record on a single film which comprises photographing simultaneously upon separate films the picture and the sound to form separate negatives, photographing said negative picture record upon a portion of a sensitized film not exposed to a sound record, and photographing the negative sound record on the same face of said last film and at a portion thereof not exposed to the picture record.

9. The method of producing a talking moving picture record on a single film which comprises photographing simultaneously upon separate films the picture and the sound to form separate negatives, photographing said negative picture record upon a portion of a sensitized film not exposed to a sound record, and photographing the negative sound record on the same face of said last film and at a portion thereof not exposed to the picture record, said last two photographing steps being performed consecutively.

10. A process for producing a combined sound and picture positive film, for sound motion pictures, comprising, photographing a sequence of pictures on one length of film, and photographing on another length of film a corresponding sequence of sound vibrations to accompany the action, separately developing the records of said two lengths of film in a manner appropriate for each, and printing such developed sound and picture records respectively upon different longitudinally extending portions of a single sensitized film, to form the sound sequence at one side of and along the picture sequence.

11. A process for producing a combined sound and picture positive film, for talking moving pictures, comprising, photographing a sequence of pictures on one length of film, and simultaneously photographing on another length of film a corresponding sequence of sounds accompanying the action, separately developing the records of said two lengths of film in a manner appropriate for each, and printing such developed sound and picture records respectively upon different longitudinally extending portions of a single sensitized film, to form the sound sequence at one side of and along the picture sequence.

R E M A R K S

The several amendments have been made in the specification to clarify the original foreign translated specification, these amendments insofar as they could be made consistent with the original specification, follow the language of the official translation of the original German text which is of record in the interference proceedings. With the exception of the introductory and closing clauses of the specification, all of these amendments have also been approved by the Examiner at an interview courteously granted to Applicants' attorneys. The introductory clause is obviously justified by the original disclosure and title of the application and the subject matter of the new closing paragraphs is in part merely formal and in other respects fully justified by the original disclosure and the claims now allowed.

It is submitted that all of the new claims are clearly allowable in view of the allowance of Claim 1 by the Board of Appeals and in view of the allowance of Claim 3 in the DeForest application. It is noted further that the decision of the Board of Appeals in holding that these applicants are entitled to make Claim 3 justifies the allowance of the new claims which include not only the outstanding features of the combination of process steps of Claim 3, but contain more specific subject matter as well.

It is noted that Claim 6 includes the steps of photographing the picture sequences and accompanying sound sequences on different lengths of film. Each of these lengths of film may be separately developed in a manner ap-

propriate for each, both of these records thereafter being printed on a common film along side of each other. It is submitted that none of the citations shows this advantageous series of process steps which permit the sound and picture records respectively to be independently treated in the appropriate manner, and then both printed side by side on a single film which is convenient to handle and use and insures the proper synchronism in reproduction at all times regardless of the fact that the sound and picture records may be given quite independent developing treatments.

It is noted that the Greensfelder citation of record distinguishes from Claim 6 in that that patent does not refer to talking motion pictures and it does not teach the step of photographing on a length of film a sequence of sounds accompanying the action since the portions of the Greensfelder films which control the production of sounds or noises are not sound records but merely light admitting apertures which are used to control original sound producing instrumentalities during the display of the pictures. Furthermore, with Greensfelder the problems of separately developing the two original lengths of film do not arise. Accordingly it is submitted that this claim is directed to a process essentially different from anything suggested in that patent. Claim 6 is distinguished from the Craig citation of record in that Craig does not form a sound sequence at one side of and along the picture sequence on the positive film; further distinctions between Claim 6 and the Craig and other patents of record are believed to be ap-

parent from the repeated discussions of the prior art previously made in the record. In any event the decision of the Board of Appeals on Claims 1 and 3 fully justifies the allowance of Claim 6.

Claim 5 which is very similar to Claim 6 but slightly more specific in lines 6 and 7 is obviously allowable for the same reasons as above pointed out in connection with Claim 6. It is submitted that the similar Claim 7 is also clearly allowable, especially in view of thefact that the latter part of Claim 7 is more specific than Claim 6.

It is submitted that Claims 10 and 11 are also both allowable for the same reasons as above pointed out in connection with Claim 6.

The allowance of Claims 8 and 9 is clearly justified in view of the fact that these claims follow very closely the subject matter of Claim 3 which was copied from the DeForest patent. In the latter part of Claims 8 and 9 the applicants have endeavored to more specifically and definitely (in the light of applicants' disclosure) set forth the last process step of Claim 3.

The Examiner will recall that each of these new claims has been briefly reviewed with applicants' attorneys at an oral interview at which most of the above facts were brought out and it is understood that the Examiner is of the opinion that with this amendment the application is ready for immediate allowance, which action is respectfully requested.

Respectfully submitted

HANS VOGT, et al.

By Ward Brady & Mead

His Attorneys.

ADDRESS ONLY
THE COMMISSIONER OF PATENTS
WASHINGTON, D. C.

Div. 7
IR

Serial No. 547,860

MAILED
JUL 16 1931

DEPARTMENT OF COMMERCE
UNITED STATES PATENT OFFICE
WASHINGTON

July sixteen, 1931

Hans Vogt, et al, Assors.,

Your APPLICATION for a patent for an IMPROVEMENT in PROCESS FOR PRODUCING COMBINED SOUND AND PICTURE FILMS,

filed Mar. 29, 1922 has been examined and ALLOWED with 11 claims.

The final fee, TWENTY-FIVE DOLLARS, WITH $1 ADDITIONAL FOR EACH CLAIM ALLOWED IN EXCESS OF 20, must be paid not later than SIX MONTHS from the date of this present notice of allowance. If the final fee be not paid within that period, the patent will be withheld, but the application may be renewed within one year after the date of the original notice with a renewal fee of $25 and $1 additional for each claim in excess of 20.

The office delivers patents upon the day of their date, on which date their term begins to run. The preparation of the patent for final signing and sealing will require about four weeks, and such work will not be begun until after payment of the necessary final fee.

When the final fee is paid, there should also be sent, DISTINCTLY AND PLAINLY WRITTEN, the name of the INVENTOR, TITLE OF THE INVENTION, AND SERIAL NUMBER AS ABOVE GIVEN, DATE OF ALLOWANCE (which is the date of this circular), DATE OF FILING, and, if assigned, the NAMES OF THE ASSIGNEES.

If it is desired to have the patent issue to an ASSIGNEE OR ASSIGNEES, an assignment containing a REQUEST to that effect, together with the FEE for recording the same, must be filed in this office on or before the date of payment of the final fee.

After issue of the patent, uncertified copies of the drawings and specifications may be purchased at the price of TEN CENTS EACH. The money should accompany the order. Postage stamps will not be received.

The final fee will NOT be received from other than the applicant, his assignee or attorney, or a party in interest as shown by the records of the Patent Office.

NOTICE.—WHEN THE NUMBER OF CLAIMS ALLOWED IS IN EXCESS OF 20, NO SUM LESS THAN $25 PLUS $1 ADDITIONAL FOR EACH CLAIM IN EXCESS OF TWENTY CAN BE ACCEPTED AS THE FINAL FEE.

Respectfully,

Thomas E. Robertson
Commissioner of Patents.

Ward, Crosby & Neil
233 Broadway
New York, N.Y.

3/73

IN REMITTING THE FINAL FEE GIVE THE SERIAL NUMBER AT THE HEAD OF THIS NOTICE.

UNCERTIFIED CHECKS WILL NOT BE ACCEPTED.

SEP-3-31 313201 H-Cash 25.00

MAIL DIVISION
SEP-3-31
U.S. PATENT OFF.

327

U. S. Patent Office

FINAL FEE PAID TO THE COMMISSIONER OF PATENTS

(Be careful to give correct Serial No.)

Serial No. 547,860

INVENTOR:

Hans Vogt et al

PATENT TO BE ISSUED TO

As per record

NAME OF INVENTION, AS ALLOWED:

PROCESS FOR PRODUCING COMBINED SOUND AND PICTURE FILMS

DATE OF PAYMENT:

September 3, 1931

FEE:

$20, $25.00

DATE OF FILING:

March 29, 1922

DATE OF CIRCULAR OF ALLOWANCE:

July 16, 1931

The Commissioner of Patents will please apply the accompanying fee as indicated above.

Ward, Crosby & Neal
Attorneys

SEND PATENT TO

Ward, Crosby & Neal
225 Broadway
New York, N. Y.

Final fees will not be received from other than the applicant, his assignee or attorney, or a party in interest as shown by the records of the Patent Office.

11—[illegible]

3/34

MAIL DIVISION
SEP - 3 31
U.S. PATENT OFFICE

7463
ISSUE DIVISION
SEP 4 19 M.
U. S. PATENT OFFICE

IN THE UNITED STATES PATENT OFFICE

In re application of HANS VOGT, et al.,

Ser. No. 547,860,

Filed Mar. 29, 1922,

For Process for Producing Combined Sound and Picture Films.

Div. 7, Room 104.

German Reich
Province of Brandenburg
Consulate General of the
United States of America
at Berlin
} ss.

SUPPLEMENTAL OATH

Consulate General of the United States)
) ss:
City of Berlin, Republic of Germany)

JOSEF ENGL, one of the joint applicants of the above entitled application, being duly sworn, deposes and says that he has read the amended specification and claims of the above entitled application as allowed on July 16, 1931, and as attached hereto, and understands the contents of the same; that the subject matter of said claims, including the process therein defined and the resulting product, was invented by himself jointly with Joseph Massolle and Hans Vogt before the filing of the above entitled application and before the filing of the corresponding German application as recited in the oath filed with the above entitled application; was not known or used before the invention of the same by applicants; was not patented or described in a printed publication in any country more than two years before the filing of the above entitled application; was not patented in any foreign country on an application filed by applicants or

their legal representatives or assigns more than twelve months before the above entitled application; was not in public use or on sale in the United States for more than two years before the above entitled application; and that said subject matter of invention has not been abandoned.

Josef Ensel

Subscribed and sworn to before me this 25th day of July, 1931.

Alfred W Jones

~~United States Consul~~

ALFRED W JONES
Vice Consul at the United States of America

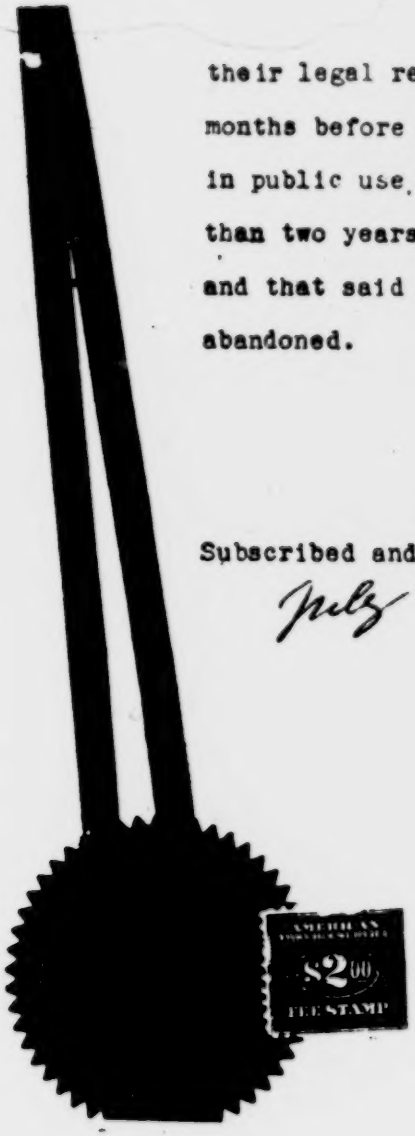

SERVICE No 5703

$2 = 8.44

Paper 33
U. S. PATENT OFFICE
ISSUE DIVISION
SEP 4 1931
U. S. PATENT OFFICE

SEP-3 31

IN THE UNITED STATES PATENT OFFICE

In re application of HANS VOGT, et al.,

Ser. No. 547,860,

Filed Mar. 29, 1922,

For Process for Producing Combined Sound and Picture Films.

Div. 7, Room 104.

German Reich
Province of Brandenburg
Consulate General of the United States of America at Berlin
} ss.

SUPPLEMENTAL OATH

Consulate General of the United States
City of Berlin, Republic of Germany
} ss:

HANS VOGT, one of the joint applicants of the above entitled application, being duly sworn, deposes and says that he has read the amended specification and claims of the above entitled application as allowed on July 16, 1931, and as attached hereto, and understands the contents of the same; that the subject matter of said claims, including the process therein defined and the resulting product, was invented by himself jointly with Joseph Massolle and Josef Engl before the filing of the above entitled application and before the filing of the corresponding German application as recited in the oath filed with the above entitled application; was not known or used before the invention of the same by applicants; was not patented or described in a printed publication in any country more than two years before the filing of the

their legal representatives or assigns more than twelve months before the above entitled application; was not in public use or on sale in the United States for more than two years before the above entitled application; and that said subject matter of invention has not been abandoned.

Josef Ernst

Subscribed and sworn to before me this 25th day of July, 1931.

Alfred W Jones

~~United States Consul~~

ALFRED W JONES
Vice Consul of the United States of America

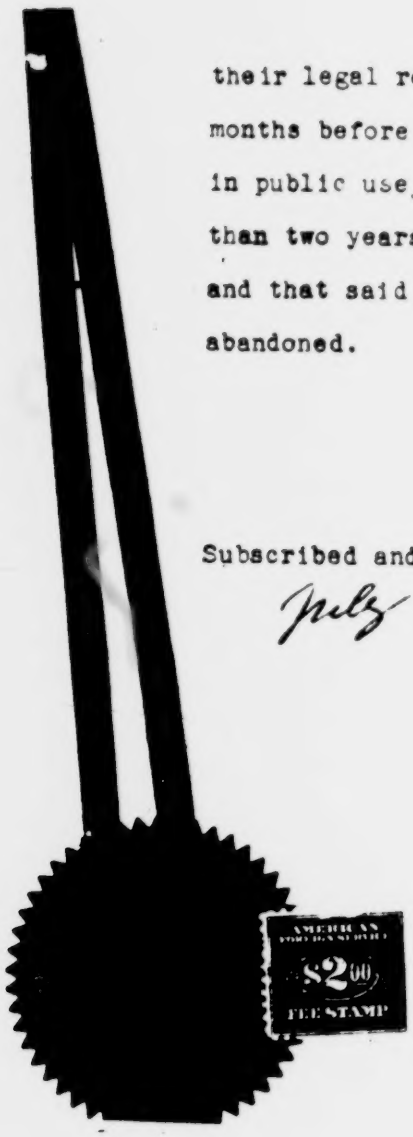

SERVICE NO 5703

$2 = 8.44

ISSUE DIVISION
SEP 4 1931
U. S. PATENT OFFICE

IN THE UNITED STATES PATENT OFFICE

In re application of HANS VOGT, et al.,
Ser. No. 547,860,
Filed Mar. 29, 1922,
For Process for Producing Combined Sound and Picture Films.
Div. 7, Room 104.

German Reich
Province of Brandenburg
Consulate General of the United States of America at Berlin } ss

SUPPLEMENTAL OATH

Consulate General of the United States }
City of Berlin, Republic of Germany } ss:

HANS VOGT, one of the joint applicants of the above entitled application, being duly sworn, deposes and says that he has read the amended specification and claims of the above entitled application as allowed on July 16, 1931, and as attached hereto, and understands the contents of the same; that the subject matter of said claims, including the process therein defined and the resulting product, was invented by himself jointly with Joseph Massolle and Josef Engl before the filing of the above entitled application and before the filing of the corresponding German application as recited in the oath filed with the above entitled application; was not known or used before the invention of the same by applicants; was not patented or described in a printed publication in any country more than two years before the filing of the above entitled application; was not patented in any foreign country on an application filed by applicants or their

legal representatives or assigns more than twelve months before the above entitled application; was not in public use or on sale in the United States for more than two years before the above entitled application; and that said subject matter of invention has not been abandoned.

Hans Voigt

Subscribed and sworn to before me this 29th. day of July, 1931.

Alfred W. Jones

~~United States Consul~~
ALFRED W. JONES
Vice Consul of the United States
of America.

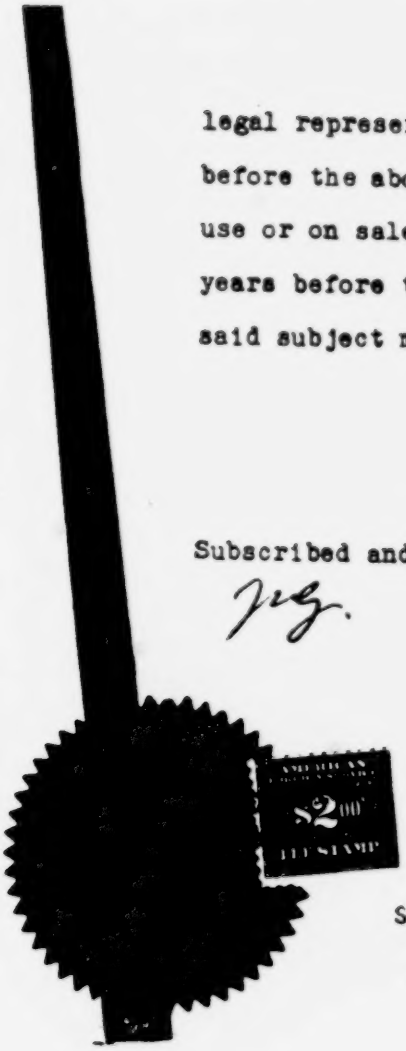

AMERICAN
$2.00
FEE STAMP

SERVICE No. 5780

Paper 34

ISSUE DIVISION

SEP 4

U. S. PATENT OFFICE

SEP - 3 31

IN THE UNITED STATES PATENT OFFICE

In re application of HANS VOGT, et al.,
Ser. No. 547,860,
Filed Mar. 29, 1922,
For Process for Producing Combined Sound and Picture Films.
Div. 7, Room 104.

SUPPLEMENTAL OATH

German Reich
Province of Brandenburg
Consulate General of the United States of America at Berlin

Consulate General of the United States)
) ss:
City of Berlin, Republic of Germany)

JOSEPH MASSOLLE, one of the joint applicants of the above entitled application, being duly sworn, deposes and says that he has read the amended specification and claims of the above entitled application as allowed on July 16, 1931, and as attached hereto, and understands the contents of the same; that the subject matter of said claims, including the process therein defined and the resulting product, was invented by himself jointly with Josef Engl and Hans Vogt before the filing of the above entitled application and before the filing of the corresponding German application as recited in the oath filed with the above entitled application; was not known or used before the invention of the same by applicants; was not patented or described in a printed publication in any country more than two years before the filing of the above entitled application; was not patented in any foreign

legal representatives or assigns more than twelve months before the above entitled application; was not in public use or on sale in the United States for more than two years before the above entitled application; and that said subject matter of invention has not been abandoned.

Hans Lagt

Subscribed and sworn to before me this 29th. day of July, 1931.

Alfred W. Jones

~~United States Consul~~
ALFRED W. JONES
Vice Consul of the United States
of America.

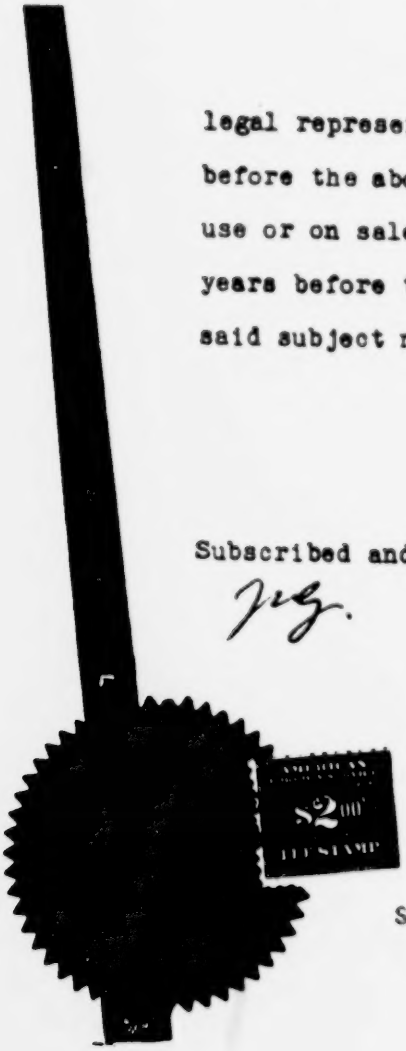

AMERICAN
$2.00
TEE STAMP

SERVICE No. 5780
.12 - 44844

ISSUE DIVISION
SEP 4
U. S. PATENT OFFICE

SEP - 3 31

IN THE UNITED STATES PATENT OFFICE

In re application of HANS VOGT, et al.,
Ser. No. 547,860,
Filed Mar. 29, 1922,
For Process for Producing Combined Sound and Picture Films.
Div. 7, Room 104.

SUPPLEMENTAL OATH

German Reich
Province of Brandenburg
Consulate General of the United States of America at Berlin

Consulate General of the United States)
) ss:
City of Berlin, Republic of Germany)

JOSEPH MASSOLLE, one of the joint applicants of the above entitled application, being duly sworn, deposes and says that he has read the amended specification and claims of the above entitled application as allowed on July 16, 1931, and as attached hereto, and understands the contents of the same; that the subject matter of said claims, including the process therein defined and the resulting product, was invented by himself jointly with Josef Engl and Hans Vogt before the filing of the above entitled application and before the filing of the corresponding German application as recited in the oath filed with the above entitled application; was not known or used before the invention of the same by applicants; was not patented or described in a printed publication in any country more than two years before the filing of the above entitled application; was not patented in any foreign country on an application filed by applicants or their

legal representatives or assigns more than twelve months before the above entitled application; was not in public use or on sale in the United States for more than two years before the above entitled application; and that said subject matter of invention has not been abandoned.

Joseph Cassolle

Subscribed and sworn to before me this 19th day of August, 1931.

Cyrus B. Follmer

CYRUS B. FOLLMER
United States Vice Consul

[redacted]

SERVICE No. 6260

$ 2.- = 8.44 Rmks

DIVISION
SEP 9 1931
U. S. PATENT OFFICE

SEP 3 31
MAIL DIVISION
SEP 3 31
U.S. PATENT OFFICE

This invention relates to processes for producing combined sound and motion picture films.

In the production of speaking films it is of great advantage especially from the point of view of use, to arrange the sound sequence and the picture sequence upon one and the same piece of material (film).

In this procedure, however, there frequently occur in consequence of the changing lighting conditions in the cinematographing process, changes in the degree of exposure of the silver bromide coating, and this causes the picture sequence to be either overexposed or underexposed.

As the same film, however, carries close to the picture sequence the normally exposed sound sequence, these difficulties resulting from differences in exposure cannot be remedied in the case of combined negatives, by developing practices such as by weakening, strengthening and so forth. They can only be remedied by subjecting the underexposed or the overexposed portions of the negative to separate appropriate treatments.

Technically, this treatment is practically impossible so long as the two sequences - picture and sound - are photographed upon the same film strip.

According to the present invention the difficulty is overcome by either employing entirely separate films for the simultaneous photographing of the sound and picture negatives, or films which are connected during the photographing, but which are separated from one another before the developing, then separately developing the negatives if and in the manner required to remedy the difficulties, and then printing both sequences - picture

legal representatives or assigns more than twelve months before the above entitled application; was not in public use or on sale in the United States for more than two years before the above entitled application; and that said subject matter of invention has not been abandoned.

Joseph Cassalle

Subscribed and sworn to before me this 19th day of August, 1931.

Cyrus B. Follmer
CYRUS B. FOLLMER
United States Consul
vice

SERVICE No. 6260

$2.--P.44 Rules

SEP 9 1930
U. S. PATENT OFFICE

SEP 3 31
MAIL DIVISION
SEP 3 31
U.S. PATENT OFFICE

This invention relates to processes for producing combined sound and motion picture films.

In the production of speaking films it is of great advantage especially from the point of view of use, to arrange the sound sequence and the picture sequence upon one and the same piece of material (film).

In this procedure, however, there frequently occur in consequence of the changing lighting conditions in the cinematographing process, changes in the degree of exposure of the silver bromide coating, and this causes the picture sequence to be either overexposed or underexposed.

As the same film, however, carries close to the picture sequence the normally exposed sound sequence, these difficulties resulting from differences in exposure cannot be remedied in the case of combined negatives, by developing practices such as by weakening, strengthening and so forth. They can only be remedied by subjecting the underexposed or the overexposed portions of the negative to separate appropriate treatments.

Technically, this treatment is practically impossible so long as the two sequences - picture and sound - are photographed upon the same film strip.

According to the present invention the difficulty is overcome by either employing entirely separate films for the simultaneous photographing of the sound and picture negatives, or films which are connected during the photographing, but which are separated from one another before the developing, then separately developing the negatives if and in the manner required to remedy the difficulties, and then printing both sequences - picture and sound - on the different portions of the same positive film.

The synchronism is assured in both cases by the perforations and/or by corresponding marks. The production of the combined positive film can take place by copying the two negative films - sound and picture - preferably consecutively upon the same positive film.

In the drawing:

Figure 1 shows the two records, the sound record and the picture record, separately.

Figure 2 shows a combined record, and

Figure 3 shows a modified form of the same.

If for the record two separate films with standard perforation are used two negatives are produced as shown in Fig. 1. The sound record comprises the row of tones t, the picture record comprises the row of pictures b. The tone row is preferably arranged near one edge of the film. The two negatives are then copied on a single film as shown in Fig. 2. If for the two records a common film is used, this has preferably the form shown in Fig. 3. This film comprises between two rows of perforations the picture record b and the sound record t. Before the developing the film is separated at D or at u. If the sounds have to be recorded at the side of the picture record, outside one row of perforations, a film strip like the one shown in Fig. 2 is produced on which the picture record is between two rows of perforations whilst the sound record is arranged at one edge of the film strip outside the corresponding row of perforations.

One can, however, previous to the printing, unite longitudinally together the two developed negative films, and then copy this so united negative in the usual manner.

Other benefits may also be derived from the broader aspects of the invention, i.e., from employing separate or separable film areas for the recording of the sound and picture negatives, and then printing both the sound and picture sequences on different portions of the same positive film.

In the following claims where reference is made to a "length of film" upon which a sound record is recorded, such "length of film" shall be interpreted as referring to a strip of film which may be either entirely separate from or merely separable from the film strip carrying the picture sequence.

While the invention has been described in detail with respect to certain particular preferred examples thereof which give satisfactory results, it will be understood by those skilled in the art after understanding the invention, that various changes and modifications may be made without departing from the spirit and scope of the invention and it is intended therefore in the appended claims to cover all such changes and modifications.

What is claimed as new and desired to be secured by Letters Patent is:

5. A process for producing a combined sound and picture positive film, for talking moving pictures, comprising, photographing a sequence of pictures on one length of film, and simultaneously photographing on another length of film a corresponding sequence of sounds accompanying the action, separately developing the two negatives in a manner appropriate for each, and printing the sound and picture negatives respectively upon different longitudinally extending portions of the same sensitized film, to form the sound sequence at one side of and along the picture sequence.

6. A process for producing a combined sound and picture positive film, for talking moving pictures, comprising, photographing a sequence of pictures on one length of film, and simultaneously photographing on another length of film a corresponding sequence of sounds accompanying the action, so that the picture and sound negatives may be separately developed in a manner appropriate for each, and printing the sound and picture negatives respectively upon different longitudinally extending portions of the same sensitized film, to form the sound sequence at one side of and along the picture sequence.

7. A process for producing a combined sound and picture positive film, for talking moving pictures, comprising, photographing a sequence of pictures on one length of film, and simultaneously photographing on another length of film a corresponding sequence of sounds accompanying the action, so that the picture and sound negatives may be separately developed in a manner appropriate for each, and printing the sound and picture negatives respectively upon the same face of the same sensitized film at different longitudinally extending portions thereof, to form the sound sequence at one side of and along the picture sequence.

8. The method of producing a talking moving picture record on a single film which comprises photographing simultaneously upon separate films the picture and the sound to form separate negatives, photographing said negative picture record upon a portion of a sensitized film not exposed to a sound record, and photographing the negative sound record on the same face of said last film and at a portion thereof not exposed to the picture record.

9. The method of producing a talking moving picture record on a single film which comprises photographing simultaneously upon separate films the picture and the sound to form separate negatives, photographing said negative picture record upon a portion of a sensitized film not exposed to a sound record, and photographing the negative sound record on the same face of said last film and at a portion thereof not exposed to the picture record, said last two photographing steps being performed consecutively.

10. A process for producing a combined sound and picture positive film, for sound motion pictures, comprising, photographing a sequence of pictures on one length of film, and photographing on another length of film a corresponding sequence of sound vibrations to accompany the action, separately developing the records of said two lengths of film in a manner appropriate for each, and printing such developed sound and picture records respectively upon different longitudinally extending portions of a single sensitized film, to form the sound sequence at one side of and along the picture sequence.

11. A process for producing a combined sound and picture positive film, for talking moving pictures, comprising, photographing a sequence of pictures on one length of film, and simultaneously photographing on another length of film a corresponding sequence of sounds accompanying the action, separately developing the records of said two lengths of film in a manner appropriate for each, and printing such developed sound and picture records respectively upon different longitudinally extending portions of a single sensitized film, to form the sound sequence at one side of and along the picture sequence.

ISSUE DIVISION
NOV 19 1931
U. S. PATENT OFFICE

35-

IN THE UNITED STATES PATENT OFFICE

In re application of HANS VOGT, et al.,
Ser. No. 547,860,
Filed March 29, 1922,
For Processes for Producing Combined Sound and Picture Films
Div. 7, Room 104.
Patent No. 1,825,598, granted September 29, 1931.

New York, N.Y.,
November 18, 1931.

Hon. Commissioner of Patents,
Washington, D. C.

Sir:

It is respectfully requested that a certificate of correction be issued in connection with the above entitled patent to correct the following printer's errors:

(a) In the specification, page 1, line 71, the reference character "p" should be - D -.

(b) In claim 10, page 3, line 11, the word "accompanying" should be - accompany -.

The original patent is enclosed in order that the certificate of correction may be attached thereto.

Inasmuch as several suits are about to be filed under this patent, it is respectfully requested that the issuance of the certificate of correction be expedited in so far as possible.

Respectfully submitted,
Ward Analy & Neal
Attorneys for Vogt, et al.

ADDRESS ONLY
THE COMMISSIONER OF PATENTS
WASHINGTON, D. C.

ABS
808

LETTER No.

DEPARTMENT OF COMMERCE

36

UNITED STATES PATENT OFFICE

WASHINGTON

December 2, 1931.

In the matter of
Letters Patent No. 1,825,598,
Vogt, Massolle, and Engl, Assors.,
September 29, 1931,
Ward and Crosby, attorneys.

REPORT OF THE CHIEF OF THE ISSUE AND GAZETTE DIVISION.

Attorneys return Letters Patent requesting that a certificate be issued correcting certain errors as set forth in the accompanying letter.

The first alleged error is referred to the Examiner for report.

The second error is chargeable to the Printer.

Respectfully,

John Thomas

Chief of the Issue Division.

To Division 7 for report.

REPORT OF THE EXAMINER OF DIV. 7

Reference character "p" comprising the first alleged error is correct in the patent as printed as it agrees with the drawing and the written description in line 1, page 2 of the amendment of Nov. 24, 1[illegible].

Character "D" appears only in an unentered specification attached to supplemental oaths apparently to comply with the last sentence of Rule 48, filed with the final fee, September 3, 1931.

Respectfully,

O. G. Harbo

To Commissioner of Patents.

Examiner, Div. 7

ADDRESS ONLY
THE COMMISSIONER OF PATENTS
WASHINGTON, D. C.

DEPARTMENT OF COMMERCE EMG

UNITED STATES PATENT OFFICE

WASHINGTON

U. S. PATENT OFFICE
COMMISSIONER'S OFFICE
DEC 4 - 1931
COPY MAILED

37

December 4, 1931

In re Patent No. 1,825,598,
Vogt, Lassolle and Engl,
Process for Producing Combined
Sound and Picture Films.

Request for Certificate of Correction.

Consideration has been given to your request for a certificate of correction.

As to the alleged error (a), the record shows that the patent is printed in accordance with the copy furnished this Office. The reference character "D" appeared in a specification attached to certain supplemental oaths but that specification was not entered in lieu of the original specification or as correcting any alleged errors therein. Consequently no certificate of correction can be issued with reference to that.

As to the second error, while it is regretted that it should have been made, it is thought that the meaning is obvious and therefore the issuance of a certificate of correction is not justified.

The patent is returned herewith.

THOMAS E. ROBERTSON,
Commissioner.

By R. F. Whitehead
Law Examiner.
3/84

Messrs. Ward, Crosby & Neal,
225 Broadway, New York, N. Y.

ISSUE DIVISION
Dec 8/31
U. S. PATENT OFFICE
3 P m

IN THE UNITED STATES PATENT OFFICE

In re application of HANS VOGT, et al.,

Ser. No. 547,860,

Filed March 29, 1922,

For Processes for Producing Combined Sound and Picture Films

Div. 7, Room 104.

Patent No. 1,825,598, granted September 29, 1931.

New York, N.Y.,

December 7, 1931.

Hon. Commissioner of Patents,

Washington, D. C.

Sir:

In reference to the Law Examiner's letter of December 4, 1931, in connection with the error in the printing of claim 10, for which a certificate of correction was asked, it is respectfully requested that the refusal to issue such certificate be reconsidered and that such a certificate be issued.

While it will be apparent that some error is involved in printing, it will be difficult for the reader to determine exactly what the error is without reference to the correct version in the file wrapper.

APPROVED

DEC 8 - 1931

For the Commissioner of Patents

Respectfully submitted,

Ward Cooley & Neal

Attorneys for Vogt, et al.

MAIL ROOM
DEC 19 1931
PATENT OFFICE

~~Report No. 400.~~

#41

orm 789

District Court of the United States

DISTRICT OF DELAWARE.

HONORABLE COMMISSIONER OF PATENTS
Washington D. C.

SIR:

In compliance with the Act of February 18, 1922 (42 Stat. L. 392), you are advised that there was filed on the 20th day of November, 193 1, in this court an action, suit, or proceeding No. 925 In Equity entitled:

Name American Tri-Ergon Corporation, ..., Plaintiff,

Address a corporation of New York, ...

versus

Name R.K.O. Radio Pictures, Inc., ..., Defendant,

Address a corporation of Delaware, ...

brought upon the following patents:

PATENT NO.	DATE OF PATENT	PATENTEE
1,825,598	Sept. 29,1931	Hans Vogt, Joseph Massolle and Josef Engl.

In the above-entitled case, on the ..... day of ....., 193 , the following patents have been included by ..... (insert amendment, answer, cross bill, or other pleading):

PATENT NO.	DATE OF PATENT	PATENTEE
1		
2		
3		
4		
5		

In the above-entitled case the following decision has been rendered or decree issued:

.....

.....

IN WITNESS WHEREOF I have affixed my hand this eighteenth day of December, 1931, at Wilmington, Delaware.

.....

ISSUE DIVISION
Dec 8/31
U. S. PATENT OFFICE
3 P m

IN THE UNITED STATES PATENT OFFICE

In re application of HANS VOGT, et al.,

Ser. No. 547,860,

Filed March 29, 1922,

For Processes for Producing Combined Sound and Picture Films

Div. 7, Room 104.

Patent No. 1,825,598, granted September 29, 1931.

New York, N.Y.,

December 7, 1931.

Hon. Commissioner of Patents,

Washington, D. C.

Sir:

In reference to the Law Examiner's letter of December 4, 1931, in connection with the error in the printing of claim 10, for which a certificate of correction was asked, it is respectfully requested that the refusal to issue such certificate be reconsidered and that such a certificate be issued.

While it will be apparent that some error is involved in printing, it will be difficult for the reader to determine exactly what the error is without reference to the correct version in the file wrapper.

APPROVED

DEC 8 - 1931

R. F. Whitehead

For the Commissioner of Patents

Respectfully submitted,

Mann Conley & Neal

Attorneys for Vogt, et al.

orm 789

District Court of the United States

DISTRICT OF DELAWARE.

HONORABLE COMMISSIONER OF PATENTS
Washington D. C.

SIR:

In compliance with the Act of February 18, 1922 (42 Stat. L. 392), you are advised that there was filed on the 20th day of November, 1931, in this court an action, suit, or proceeding No. 925 In Equity entitled:

Name American Tri-Ergon Corporation, Plaintiff,

Address a corporation of New York,

versus

Name R.K.O. Radio Pictures, Inc., Defendant,

Address a corporation of Delaware,

brought upon the following patents:

PATENT NO.	DATE OF PATENT	PATENTEE
1,825,598	Sept. 29,1931	Hans Vogt, Joseph Massolle and Josef Engl.

In the above-entitled case, on the day of , 193 , the ollowing patents have been included by (insert amendment, answer, cross bill, or other pleading):

PATENT NO.	DATE OF PATENT	PATENTEE
1		
2		
3		
4		
5		

In the above-entitled case the following decision has been rendered or decree issued:

IN WITNESS WHEREOF I have affixed my hand this eighteenth day of December, 1931, at Wilmington, Delaware.

H. D. Malraffy Jr.
Clerk of said Court.

Plaintiff's Exhibit No. 4. 1699

Paper No. 55
ES/GAC

Final Hearing
May 2, 1928.

In the United States Patent Office.

Patent Interference No. 53103.

De Forest vs. Vogt, Massolle and Engl. 1700

Recording Sounds.

Patent granted Lee De Forest April 8, 1924, No. 1,489,314, on an application filed July 16, 1921, No. 485,332.

Application of Hans Vogt, Joseph Massolle and Josef Engl filed March 29, 1922, No. 547,860.

1701

MESSRS. DARBY & DARBY for De Forest.

MESSRS. WARD & CROSBY for Vogt, Massolle and Engl.

This controversy involves talking motion pictures and has to do particularly with a process for making films. It was found that if the picture and sound were recorded directly upon the same film either one or the other would be unsatisfactory, because the same amount of light is not suitable for recording both picture and

1702 *Plaintiff's Exhibit No. 4.*

sound. According to the process of this interference the picture and sound are recorded on separate films and thereafter combined. It is to be particularly observed that each of the two counts specifies that the picture and sound are to be simultaneously photographed.

This interference was set up with De Forest as the senior party. On motion decided April 13, 1926, Vogt *et al.* were given the benefit of their German application date of April 14, 1921, thereupon becoming the senior party.

1703

The invention has been patented to the party De Forest. Vogt *et al.* copied the two counts from the De Forest patent but they were rejected by the primary examiner. The rejection was reversed by the Examiners-in-Chief and in their opinion they mentioned the word "simultaneously" occuring in both claims as distinguishing these claims from the Greenfelder patent cited. Under the circumstances the usual rule in interferences that each limitation of the claims is to be deemed essential has particular force. The counts read as follows:

1704

> Count 1: The method of producing talking moving pictures on the same film which comprises photographing simultaneously upon separate films the picture and the sound, and photographing the sound record on an unexposed portion of the picture film.
>
> Count 2: The method of producing talking moving pictures on the same film which comprises photographing simultaneously upon separate films the picture and the sound, and photographing the sound record on an unexposed portion of the picture film be-

 1705

tween the marginal edge and the sprocket perforations thereof.

The testimony submitted by De Forest fails to prove that he had conceived this feature of simultaneously photographing the picture and the sound prior to his filing date. The notes in the De Forest notebook relied upon do not include this feature, and the corroborating witnesses do not support De Forest with respect to this feature of simultaneity. Furthermore, these corroborating witnesses had no means of fixing 1706
the date.

Garity knows that De Forest kept a running notebook with which he was conversant in a general way, and he recognizes the two notebooks put into evidence (XQ. 41, p. 45). He states, however, in answer to XQ. 40, page 45, that he is not able to say that a particular record was made on a certain date, his memory not going back so far. The notes purport to have been made December, 1920, and January and April, 1921. Vogt *et al.* having a filing date under the International Convention of April 14, 1921, can- 1707
not be considered as anticipated by this testimony by Garity.

The witness Senner likewise has no way of fixing any date prior to the filing date of Vogt *et al.* De Forest purchased from Senner's employer on February 18, 1921, a camera, and Senner is of the impression that it was within a week or ten days after this purchase that De Forest talked with him about producing talking motion pictures. The dates here are so close, however, that the impression of the witness is not sufficiently reliable to overcome the record date of Vogt *et al.*

1708 *Plaintiff's Exhibit No. 4.*

It is also true that the testimony of neither of these witnesses includes the feature of simultaneity. In fact the answer of Garity to Q. 20, p. 41, seems to contradict the thought of simultaneity, but at all events, this thought is not affirmatively present. The testimony of Torma does not appear to be regarded by De Forest as supporting his case for priority of conception.

De Forest being admittedly the last to reduce to practice, his reduction to practice consisting
1709 of the filing of his application, July 16, 1921, he could in any event prevail only if he establishes diligence between the German filing date of the other party and his own filing date. The German filing, as already stated, was April 14, 1921, so that De Forest would have the duty of proving diligence during this interval of three months.

It is not urged upon De Forest's behalf that he was doing anything with the present invention from Vogt *et al's* record date until he submitted to his patent counsel, on June 30, 1921, the data for his application. According to the
1710 testimony of his assistant Garity an actual reduction to practice could have been made without difficulty.

It is the contention on behalf of De Forest that he was working on the problem of recording sound, and should be credited with diligence upon the basis of this activity. But this work does not amount to diligence in reducing to practice an invention involving the combination of sound and pictures. There are authorities to the effect that diligence on a whole machine may be considered as diligence toward the elements of such machine, but the present case is not of that class and De Forest can not be credited with dili-

gence for one invention upon the basis of what he was doing toward an independent, even if related, invention. On the ground that De Forest has established no date earlier than the record date of Vogt *et al.*, and on the further ground that he was not diligent during the three months between Vogt *et al's* filing date and his own filing date, it is ruled that Vogt *et al.* are the first inventors.

Priority of invention of the subject matter in issue is hereby awarded to Hans. Vogt, Joseph Massolle and Josef Engl, the senior party. 1712

Limit of appeal: August 3, 1928.

H. I. Houston,
Examiner of Interferences.

July 14, 1928.

Plaintiff's Exhibit No. 4-A.

Appeal No. 153 Paper No.64
Decision.

Appeal No. 153 1713

Hearing:
Aug. 1, 1929.

In the United States Patent Office

Before the Board of Appeals

De Forest vs. Vogt, Massolle and Engl

Patent Interference No. 53,103 between the patent granted Lee De Forest April 8, 1924, No.

1714 *Plaintiff's Exhibit No. 4a.*

1,489,314, on an application filed July 16, 1921, Ser. No. 485,332, and the application of Hans Vogt, Joseph Massolle and Josef Engl filed March 29, 1922, Ser. No. 547,860. Recording Sounds.

MESSRS. DARBY & DARBY for De Forest.

MESSRS. WARD, CROSBY AND NEAL for Vogt *et al.*

1715

This is an appeal by De Forest from the decision of the Examiner of Interferences awarding priority of invention to Engl, Massolle and Vogt, the senior party, upon all the counts which read as follows:

1. The method of producing talking moving pictures on the same film which comprises photographing simultaneously upon
1716 separate films the picture and the sound, and photographing the sound record on an unexposed portion of the picture film.

2. The method of producing talking moving pictures on the same film which comprises photographing simultaneously upon separate films the picture and the sound, and photographing the sound record on an unexposed portion of the picture film between the marginal edge and the sprocket perforations thereof.

The counts are claims 1 and 3 of the patent No. 1,489,314 of De Forest and the interference

1717

was originally declared with De Forest as the senior party but upon motion, Vogt *et al.*, by a decision dated April 13, 1926, were given the benefit of their German application date of April 14, 1921 and made the senior party.

The Examiner of Interferences points out that Vogt *et al.* copied the two counts from the De Forest patent but they were rejected by the Primary Examiner. The rejection was reversed by the Board of Examiners-in-Chief, and in their opinion they mentioned the word "simultaneously" occurring in both claims as distinguishing them from the Greenfelder patent cited against them. He therefore emphasized in his decision the word "simultaneously" as an essential limitation in the claims. He held that the testimony submitted by De Forest fails to prove that he had conceived this feature of *simultaneously* photographing the picture and the sound prior to his filing date.

1718

For proof of conception De Forest relied primarily upon his note book No. 2, De Forest Exhibit 1, in which, under date of December 28, 1920, is an entry which reads:

1719

> Developed this last 10 minutes until wholly fogged. This would be too long for cine picture. Hence will probably need to make two negatives (picture and sound) and print on same pos.

A second entry under date of Jan. 18, 1921 reads:

> Developed 11 minutes (very cold day) (longer development is best for sound film

1720 *Plaintiff's Exhibit No. 4a.*

> but not for picture. Hence will probably use 2 films.

These notes clearly indicate that as the sound and picture films require a different degree or time of development, it would be necessary to use two films and develop them separately. The Examiner of Interferences held that there was nothing in these notes to indicate that the sound and picture films were to be photographed "simultaneously" as required by the counts.

1721 De Forest, in his brief, contends that the object of the invention is to synchronize the sounds with the movement of the lips of a person in the picture and that it is at once apparent that the picture and sound must be recorded simultaneously. He further points out that on the motion to shift the burden of proof, the Law Examiner gave to Engl *et al.* the benefit of the filing date of his German application and if it be held that De Forest's testimony fails to support the issues, it is equally true that the German application of Engl *et al.* fails in the same respect.

1722 In the German application we find the following:

> According to the invention this difficulty is obviated in that for the making of the negatives either entirely separate films are provided or those which although still united during the recording are, however, detached from each other before the developing. Synchronism in both cases is insured by perforation and by suitable marks.

In our opinion the statements that the films are still united during the recording indicates

1723

that the record is made simultaneously on both films and this is further borne out by the statement that when separated for development purposes, the synchronization is insured by perforations and suitable marks so that they can be reconnected with proper registration. The same disclosure is found in the U. S. application of Engl *et al.*

As to the De Forest testimony, it appears that the reason why two films were to be used was that different degrees of development were necessary for the sound and picture negatives and it might seem obvious that the original idea which rendered this change necessary was that the sound and pictures were supposed to be photographed simultaneously. At this time only sound had been photographed in the laboratory which may be the reason why nothing was said in the notes as to simultaneous photography of the sound and picture. While the simultaneous exposure of the sound and picture negatives would seem to be the most obvious procedure, the brief of Engl *et al.* points out that other methods were known prior to De Forest's alleged conception, see Engl *et al.* brief, pages 24 and 25, and appear to be disclosed in the patent to Greenfelder No. 1,254,684 which was cited in the application of Engl *et al.*, and the burden was on De Forest, as the junior party, to prove his case. Furthermore, he must rely for corroboration upon his witnesses Garity and Senner. Garity has no way of fixing the dates when the entries were made in the note books and these dates are fixed only by De Forest's own testimony. Garity merely knows that he saw the note

1724

1725

1726 *Plaintiff's Exhibit No. 4a.*

books between December, 1920 and prior to De Forest's trip to Germany the last of July, 1921 and that, at some time, De Forest discussed the subject matter of the notes with him. Senner can fix no date except with relation to the purchase of a camera from him on February 18, 1921, and thinks that De Forest, within a week or ten days thereafter, brought some films to him for development which films contained both sound and picture records which were of unequal exposure.

1727 De Forest suggested that it would be best to use separate negatives while he discouraged this method and suggested the use of light of different intensity in making the records. This disclosure does not mention "simultaneous" exposure and the time between about March 1 and April 14, 1921, when Engl *et al.* entered the field is so short that a person testifying six or seven years after the event could hardly fix the time with sufficient definiteness. De Forest says (XQ. 74) that it was several weeks after he got the camera before he had the necessary attachment

1728 placed on same for recording sound on the same film with the picture. We must, therefore, agree with the Examiner of Interferences that De Forest has failed to established conception of the invention in issue prior to the constructive reduction to practice of the senior party.

Even if De Forest were given a conception as of January 1, 1921, the date set up in his preliminary statement, he would have to prove diligence from just prior to April 14, 1921 when Engl *et al.* entered the field, up to his filing date of July 16, 1921. There is no testimony which clearly establishes any work done on the inven-

 1729

tion in issue from January 1, 1921 up to April 14, 1921 and De Forest seeks to rely upon his work on the general subject of talking moving pictures. This work was the subject of the other interference No. 51,947, and the present invention relates to entirely different subject matter. His note books show that he had already obtained goods results in making sound records and after obtaining the moving picture camera on February 18, 1921 he could have coupled the two cameras without great difficulty and reduced the invention to practice, but on page 13 of his record (Q. 25) he admits that he had not attempted to actually use the invention of the interference prior to filing his application on July 16, 1921. This is also verified by the testimony of Garity on page 41, Q. 20, page 47, XQ. 52, and page 48, XQ. 55. 1730

De Forest has failed to prove conception prior to his filing date and even if he had he has not established the diligence required of him.

The decision of the Examiner of Interferences is affirmed. 1731

WM. A. KIMMAN)
First Assistant Commissioner) Board
FRANK C. SKINNER) of
Examiner-in-Chief) Appeals
G. R. IDE)

Jan. 7, 1930

1738 *Plaintiff's Exhibit No. 6.*

Patentansprüche.

1.) Verfahren zur Herstellung kombinierter Tonbildfilme, wobei die Ton-Bold-Positive auf einen gemeinsamen Film kopiert sind, dadurch gekennzeichnet, dass die Negative getrennt entwickelt werden.

2.) Verfahren zur Herstellung von kombinierten Tonbildfilmen bemäss Anspruch 1, dadurch
1739 gekennzeichnet, dass die Aufnahme der Tonzeichen und der Reihenbilder auf getdennten Filmen erfolgt.

3.) Verfahren zur Herstellung van kombinierten Tonbildfilmen gemäss Anspruch 1, dadurch gekennzeichnet, dass die Aufnahme der Tonzeichen und der Reihnenbilder auf einen gemeinsamen Film erfolgt, der nachher getrennt wird.

4.) Verfahren zur Herstellung von kombinierten Tonbildfilmen gemäss Anspruch 1-3, dadurch gekennzeichnet, dass die Negative nach erfolgter
1740 Behandlung der Länge nach miteinander vereinigt werden.

R. A.
Si.B

Translation of German patent application no. V.16431 VI/57a2 to Hans Vogt, Joseph Massolle, and Dr. Joseph Engl.

CERTIFICATE.

Messrs. Hans Vogt, of Berlin-Wilmersdorf, Joseph Massolle, and Dr. Joseph Engl, of Ber-

Plaintiff's Exhibit No. 6. 1741

lin-Grunewald, have filed in Germany an application for a patent of invention at the Reichspatentamt on April 14, 1921 for:

"Method of making combination fono-films."

The document hereunto attached is a true and exact copy of the original papers of this application.

Berlin, December 9, 1925. 1742
The President of the Reichspatentamt.
per
(signed) W. KAHL.

Embossed seal of the
German Patent Office
V.16431 VI/57a2.

Translation of Vogt et al German Application No. V 16431-VI/57a2. 1743

C. R. Forth
Chief Engineer

Tempelhof April 13, 1921
Albrechtstrasse 104.

Patent application.

"Method of producing combined sound picture films."

In the production of talking films it is of great advantage, particularly for operating reasons, to fix the sound-series and the picture-series upon one common material carrier (film). In this proc-

1744 *Plaintiff's Exhibit No. 6.*

ess, however, in consequence of varying lighting conditions in connection with cinematographic picture recording, differences frequently occur in the degree of illumination of the silver bromide layer with the result that the picture-series is overexposed or underexposed. But, since the same film also carries the always normally illuminated sound-series close to the picture-series, these differences, in combined negatives, cannot be compensated for by developing, toning down, intensifying, etc. They can only be eliminated if
1745 the underexposed and overexposed portions of the negative are subject to a separate, suitably adapted treatment.

Technically this is practically impossible as long as the two series of events are fixed on the same film.

According to this invention this difficulty is obviated in that for the production of the negatives, either entirely separate films are provided or those which although still united during the recording are, however, detached from each other before the developing. Synchronism in both cases
1746 is insured by the perforations and by corresponding marks.

The production of the positive films can be accomplished by having the two negative films, preferably one after the other, copied on to the same positive film. However, the two negatives can be previously pasted together in the lengthwise direction and the combined negative thus obtained copied in the usual manner.

Patent Claims.

1. Method of producing combined sound-picture films in which the sound-picture positives

1747

are copied on to one common film, distinguished thereby, that the negatives are separately developed.

2. Method of producing combined sound-picture film according to claim 1, distinguished thereby that the recording of the sound-series and of the picture-series is carried out on separate films.

3. Method of producing combined sound-picture films according to claim 1 distinguished thereby that the recording of the sound-series and of the picture-series is effected upon one common film which is subsequently divided.

1748

4. Method of producing combined sound-picture films according to claims 1 to 3 distinguished thereby that the negatives after treatment is completed are joined to each other lengthwise.

1749

Density Readings on Sensitometered Strips

Report No. _____ Date Nov. 26 1932.

Step No.	STRIP No. A		STRIP No.		STRIP No. B		STRIP No.		STRIP No.		STRIP No.	
1	PICTURE DEVELOPER				SOUND DEVELOPER							
2	DENSITIES		AVE. DENSITY	OPACITY	DENSITIES		AVE DENSITY	OPACITY				
3	.09	.09	.09	1.23								
4	.10	.12	.11	1.29	.09	.09	.09	1.23				
5	.13	.16	.145	1.395	.12	.11	.115	1.30				
6	.21	.22	.215	1.64	.16	.17	.165	1.46				
7	.26	.28	.27	1.86	.22	.25	.235	1.715				
8	.35	.36	.355	2.26	.33	.36	.345	2.21				
9	.42	.45	.435	2.72	.43	.48	.455	2.85				
10	.48	.52	.50	3.16	.53	.58	.555	3.58				
11	.57	.61	.59	3.88	.66	.70	.68	4.78				
12	.65	.70	.675	4.73	.78	.82	.80	6.30				
13	.75	.76	.755	5.69	.90	.92	.91	8.12				
14	.80	.80	.80	6.30	1.02	1.06	1.04	10.95				
15	.85	.87	.86	7.23	1.16	1.18	1.17	14.78				
16	.97	.97	.97	9.32	1.24	1.32	1.28	19.05				
17	1.02	1.01	1.015	10.35	1.28	1.38	1.33	21.4				
18	1.09	1.08	1.085	12.16	1.41	1.52	1.455	28.50				
19	1.15	1.19	1.17	14.77	1.56	1.60	1.58	38.00				
20	1.24	1.30	1.27	18.60	1.66	1.70	1.68	47.90				
21	1.31	1.40	1.355	22.60	1.82	1.84	1.83	67.50				
									E 5800			
									United States District Court Eastern District of New York,			
									Exhibit 13 in evidence			
									Date Nov 28/32			
Fog	.08				.06	07			Clerk Deputy Clerk			

K P 18666

585

PLAINTIFF'S EXHIBIT No. 14

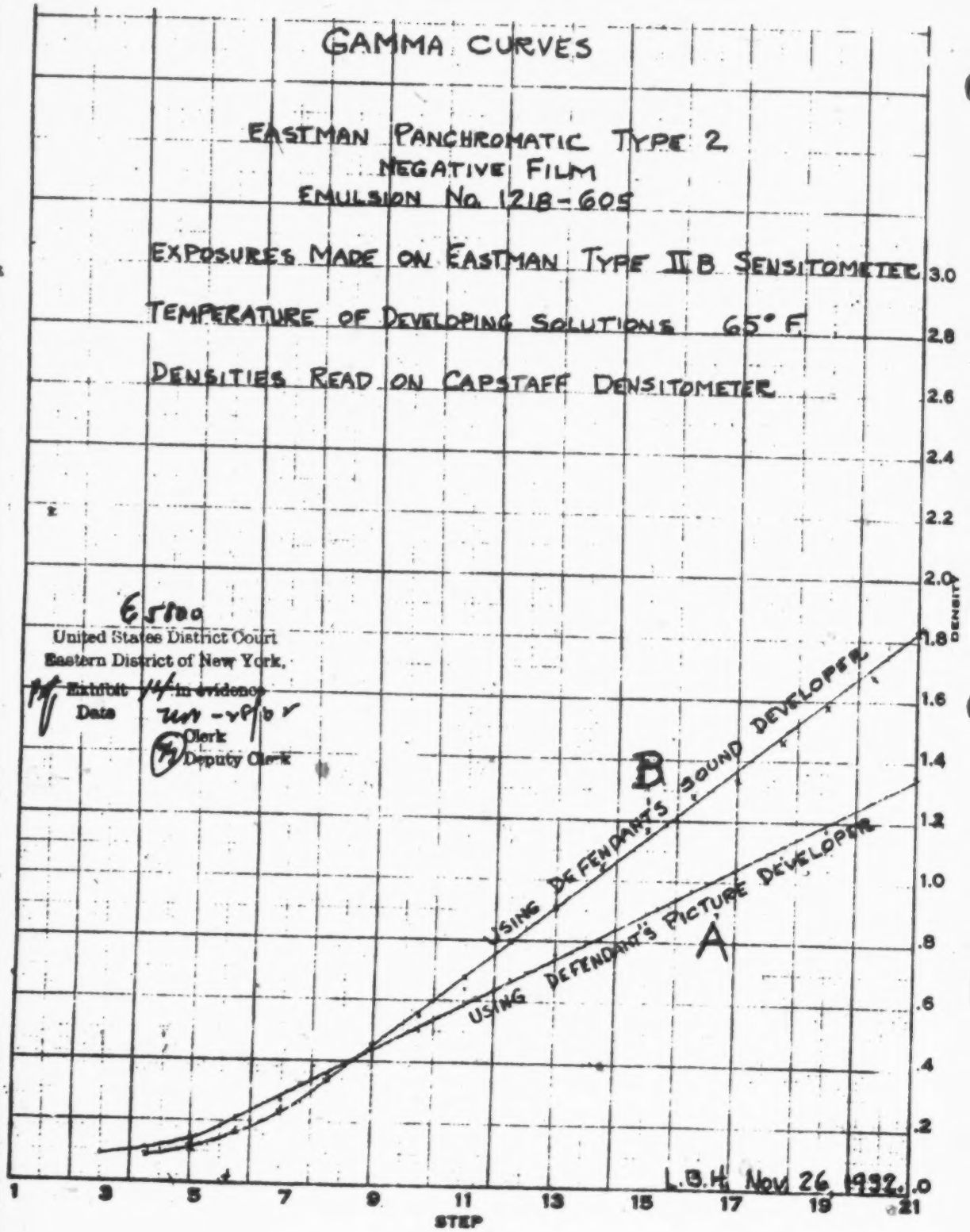

PLAINTIFF'S EXHIBIT No. 15

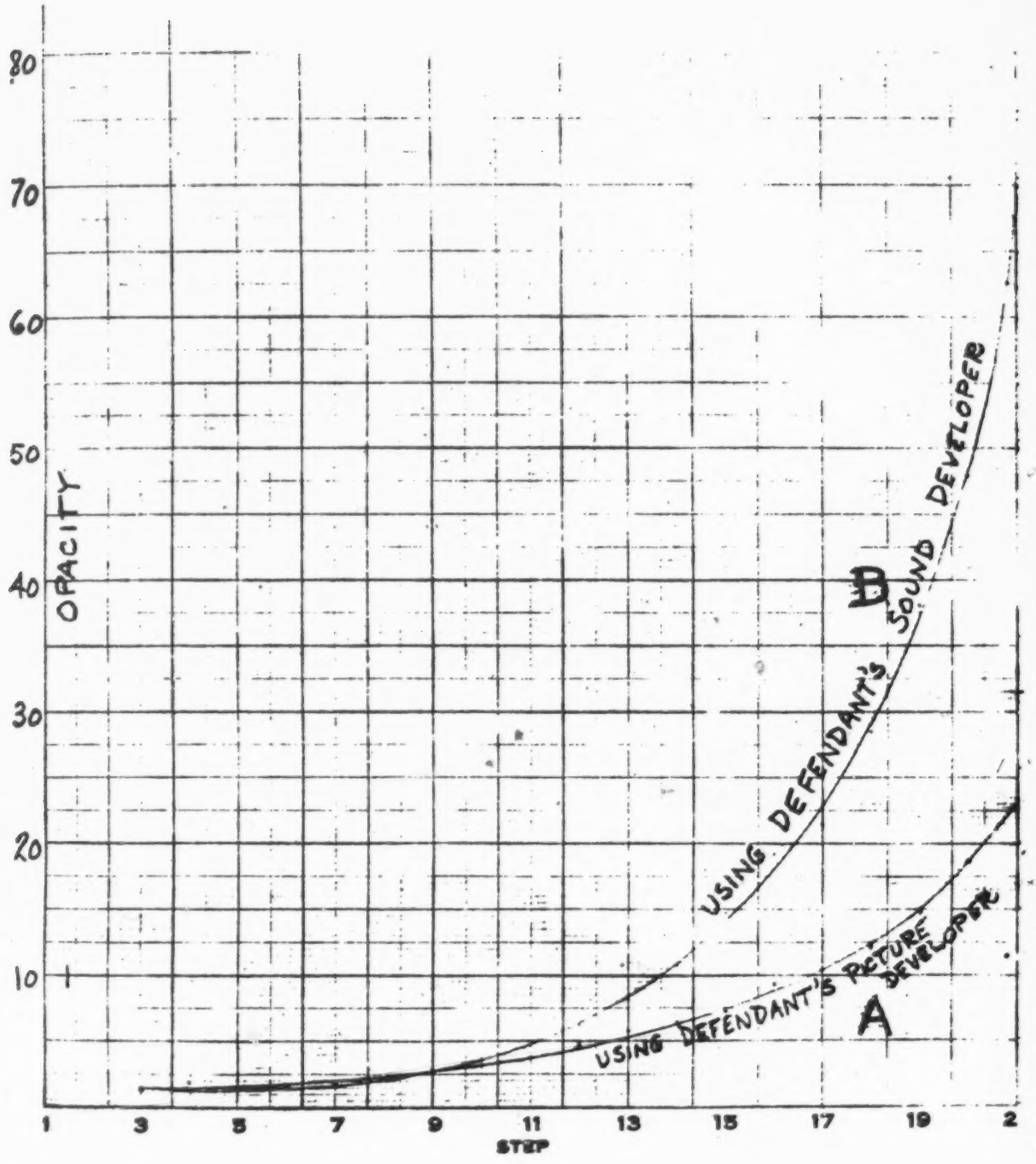

PLAINTIFF'S EXHIBIT No. 16

587

Checked Copy per L.B.H. from Ashton letter

1 oz = 437.5 grains.

SOUND NEGATIVE

oz.	gr.			
✓ 1/4	54.0	Elon	- 14 lbs.	224 oz.
✓ 13 1/4	13.1	Sodium Sulphite	-498 lbs.	7968 oz.
✓ 3/4	45.2	Hydrochinon	- 32 lbs.	512 oz
✓ 1/2	26.25	Borax	- 21 lbs.	336 oz.
1 3/4	91.9	Boric Acid	-73.5 lbs.	1176 oz.
1 gal		Water to make	-600 gals.	600 gal

PICTURE NEGATIVE

oz.	gr.			
—	32.1	Elon	-2.75 lbs.	44 oz.
11	87.5	Sodium Sulphite	-420 lbs.	6720 oz
—	32.1	Hydrochinon	-2.75 lbs.	44 oz
—	13.85	Borax	- 1 lbs., 3 oz.	19 oz.
1 gal.		Water to make	-600 gals.	600 gal.

CHART SHOWING PROCESS AS P

SERIES OF SCENES
SOUNDS SUCH
MUSIC OC

MEANS FOR PHOTOGRAPHICALLY RECORDING SERIES OF SOUND VIBRATIONS ACCOMPANYING THE SCENES, SUCH FOR EXAMPLE AS SPEECH AND MUSIC.

RECORDING OF SCENE
SOUNDS CARRIED O
SIMULTANEOUSLY

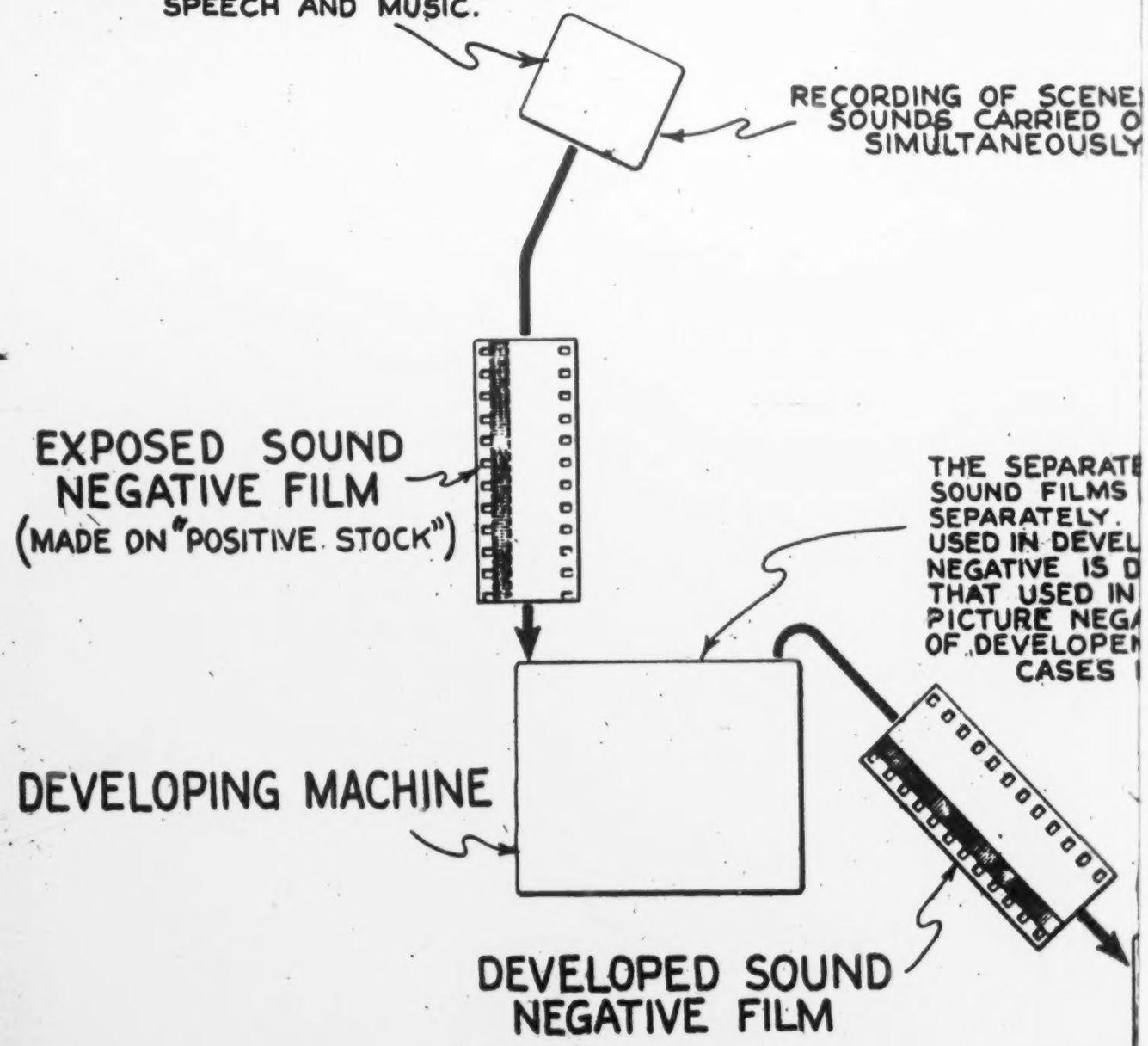

EXPOSED SOUND NEGATIVE FILM
(MADE ON "POSITIVE STOCK")

THE SEPARATE
SOUND FILMS
SEPARATELY.
USED IN DEVEL
NEGATIVE IS D
THAT USED IN
PICTURE NEGA
OF DEVELOPEN
CASES

DEVELOPING MACHINE

DEVELOPED SOUND NEGATIVE FILM

PER DEFENDANT'S ADMISSION

ES AND ACCOMPANYING
CH AS SPEECH AND
OCCUR HERE

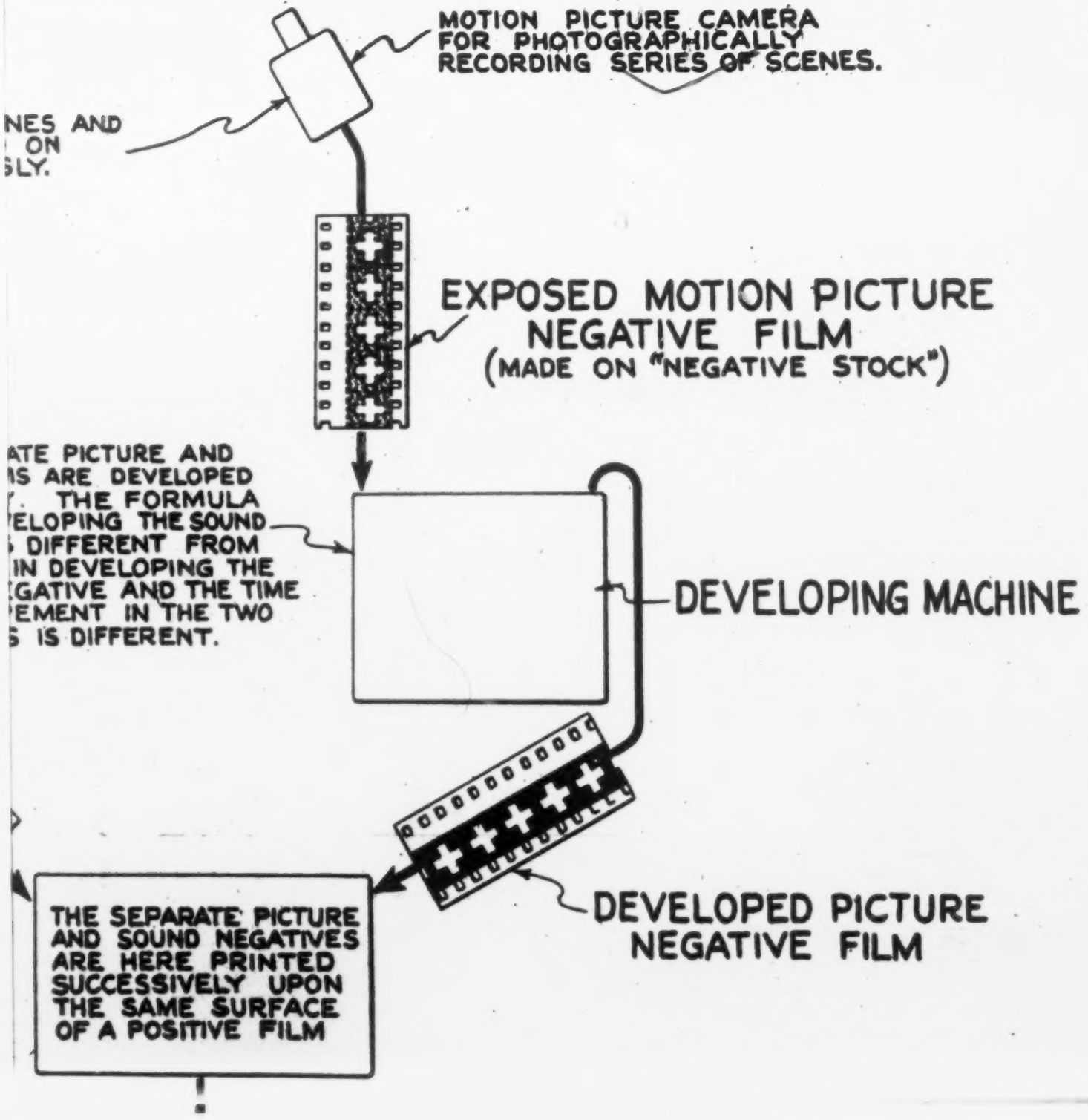

PLAINTIFF'S EXHIBIT No. 22

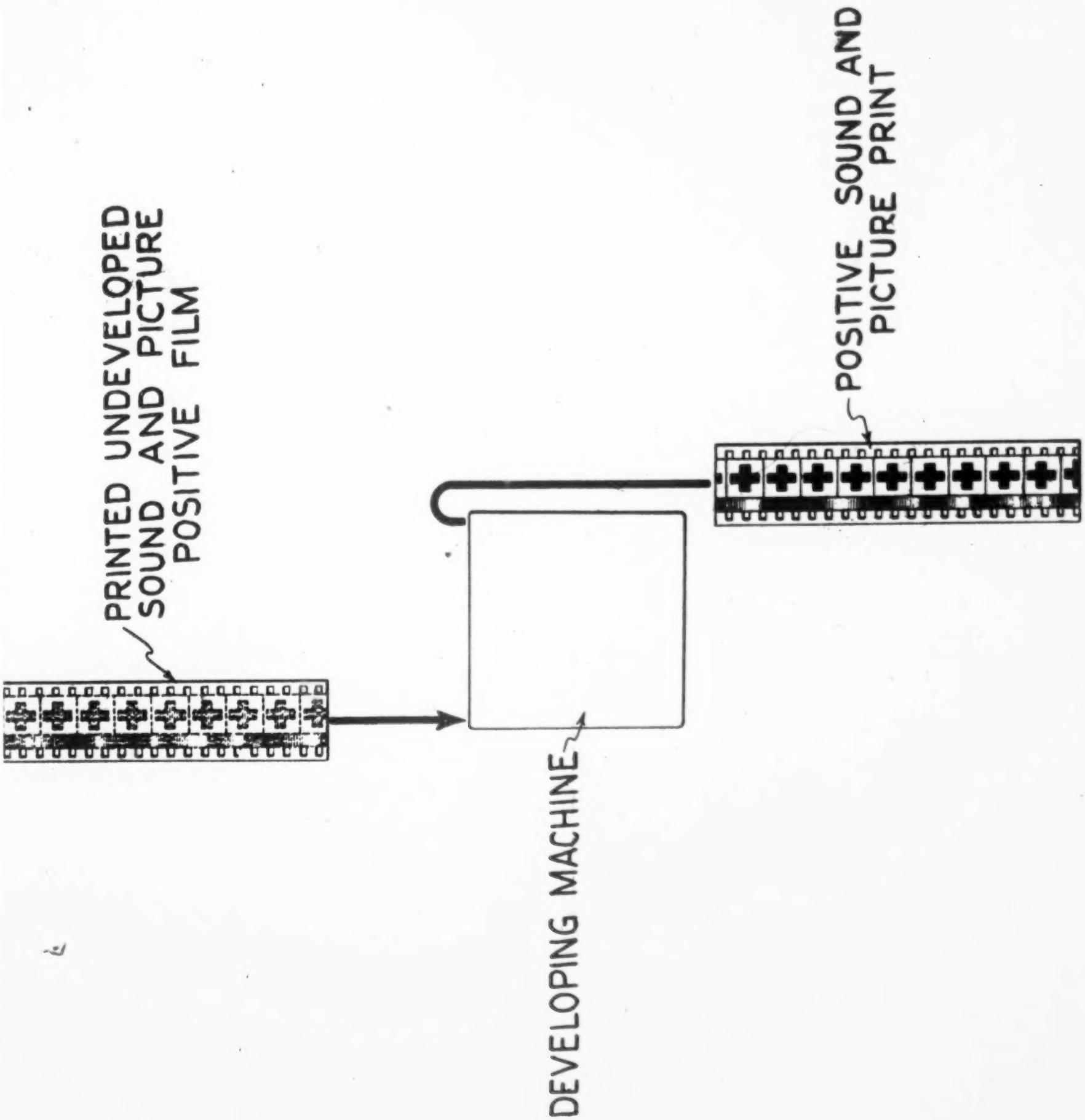

CHART SHOWING SUCCESSIVE PRINTING OF PICTURE AND SOUND NEGATIVES ON SINGLE POSITIVE FILM

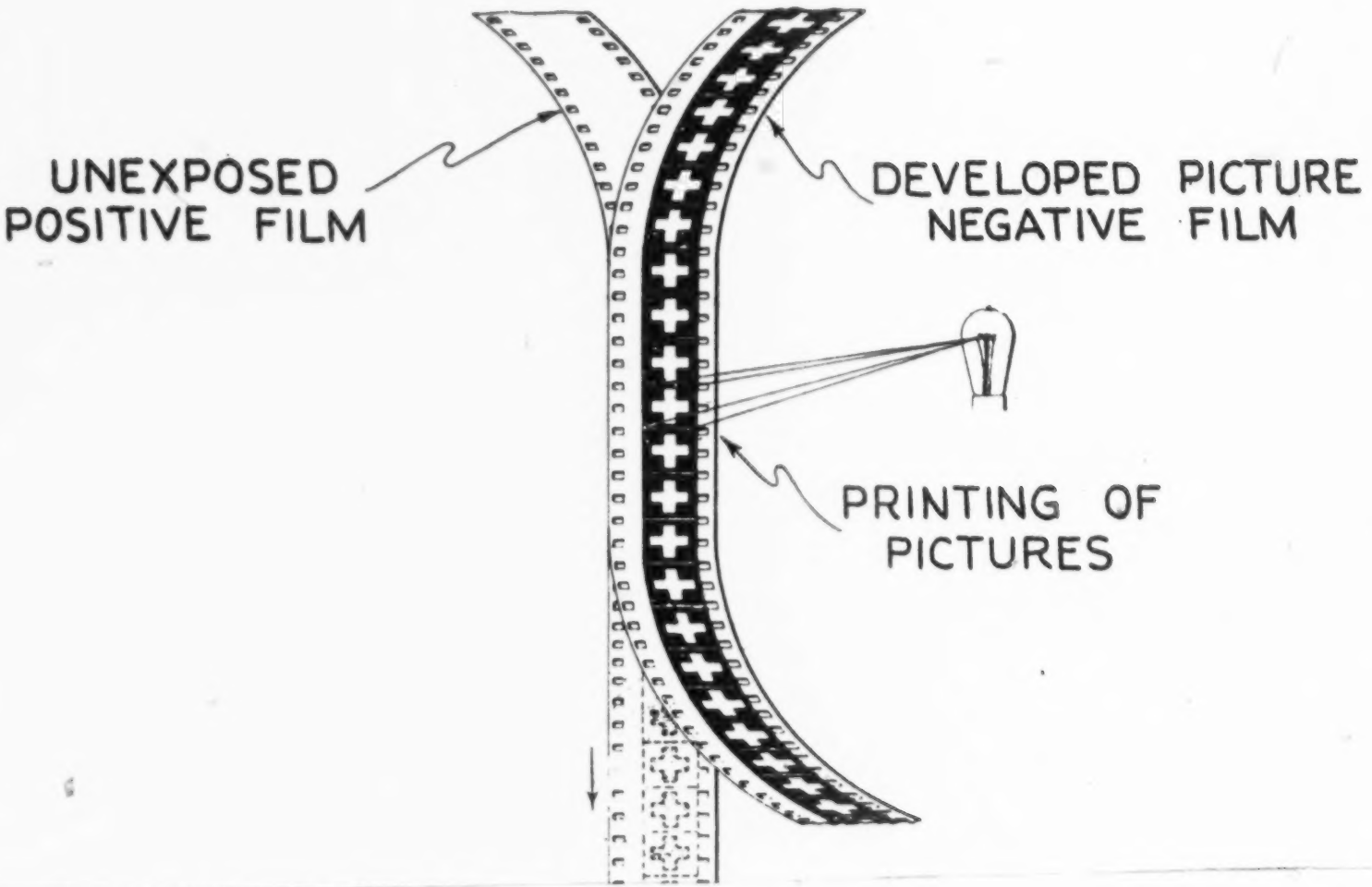

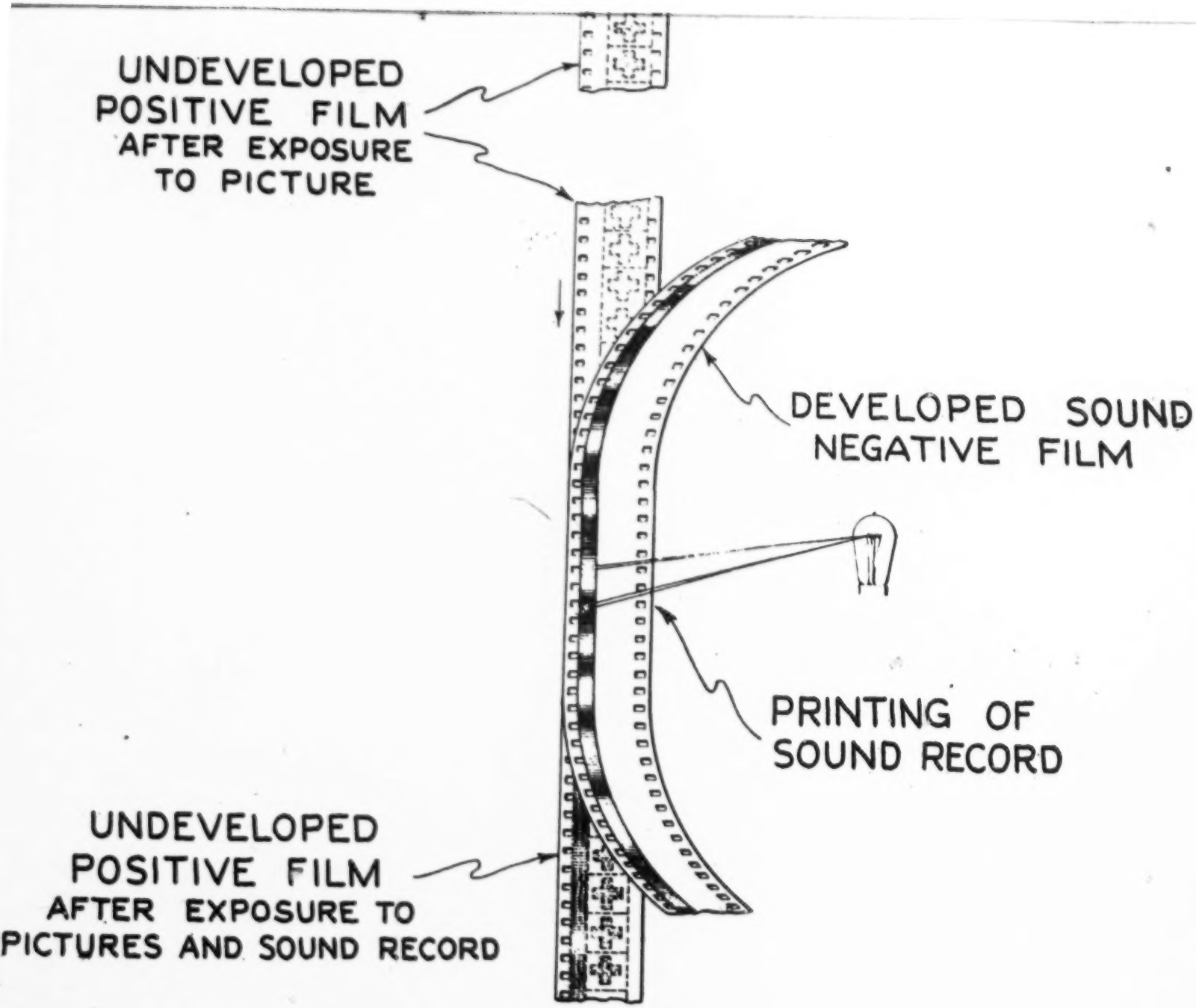

PLAINTIFF'S EXHIBIT No. 23

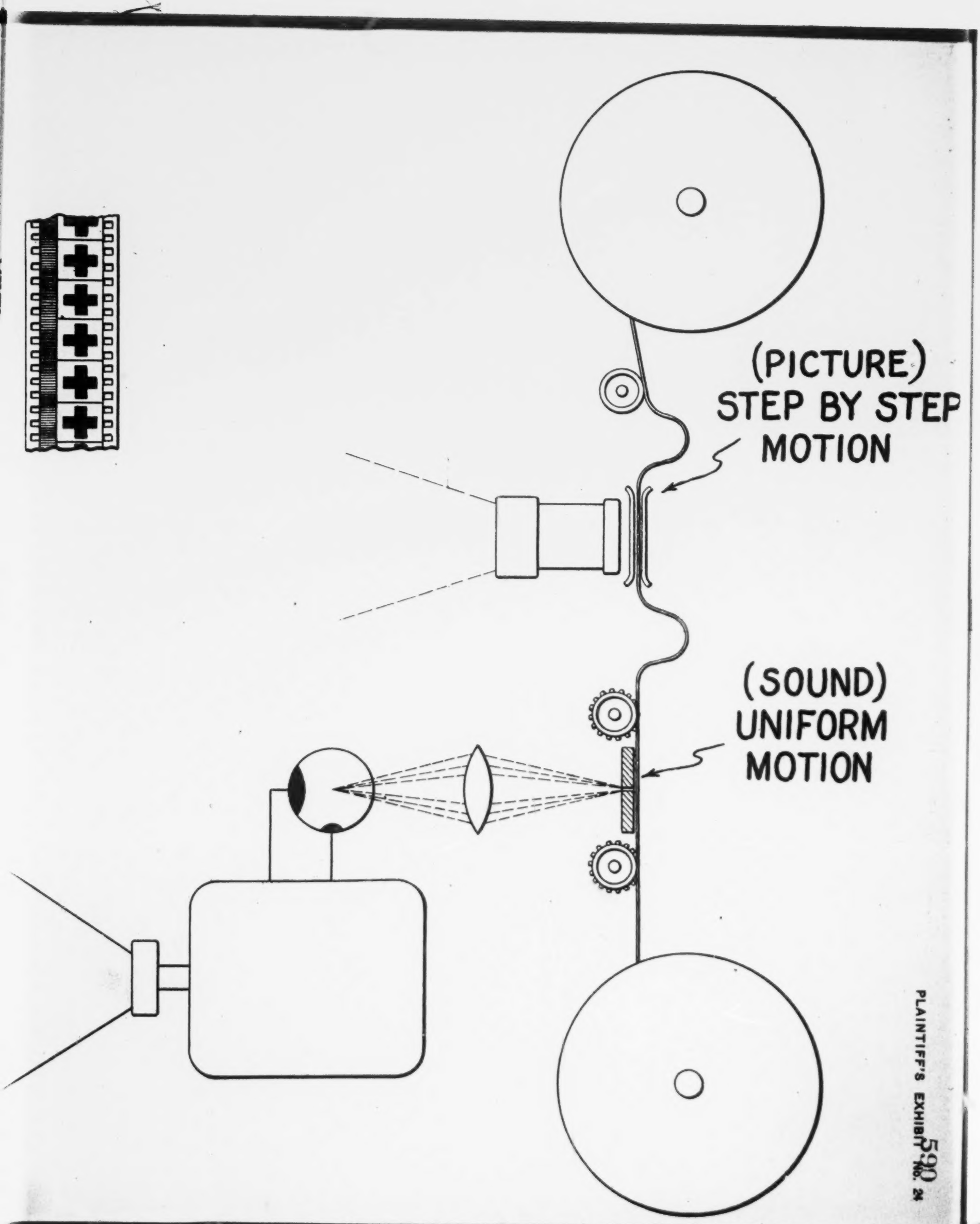

PLAINTIFF'S EXHIBIT NO. 24

591

Nov. 13, 1923. 1,473,976

E. E. RIES

SOUND RECORDING METHOD

Original Filed May 21, 1913 2 Sheets-Sheet 1

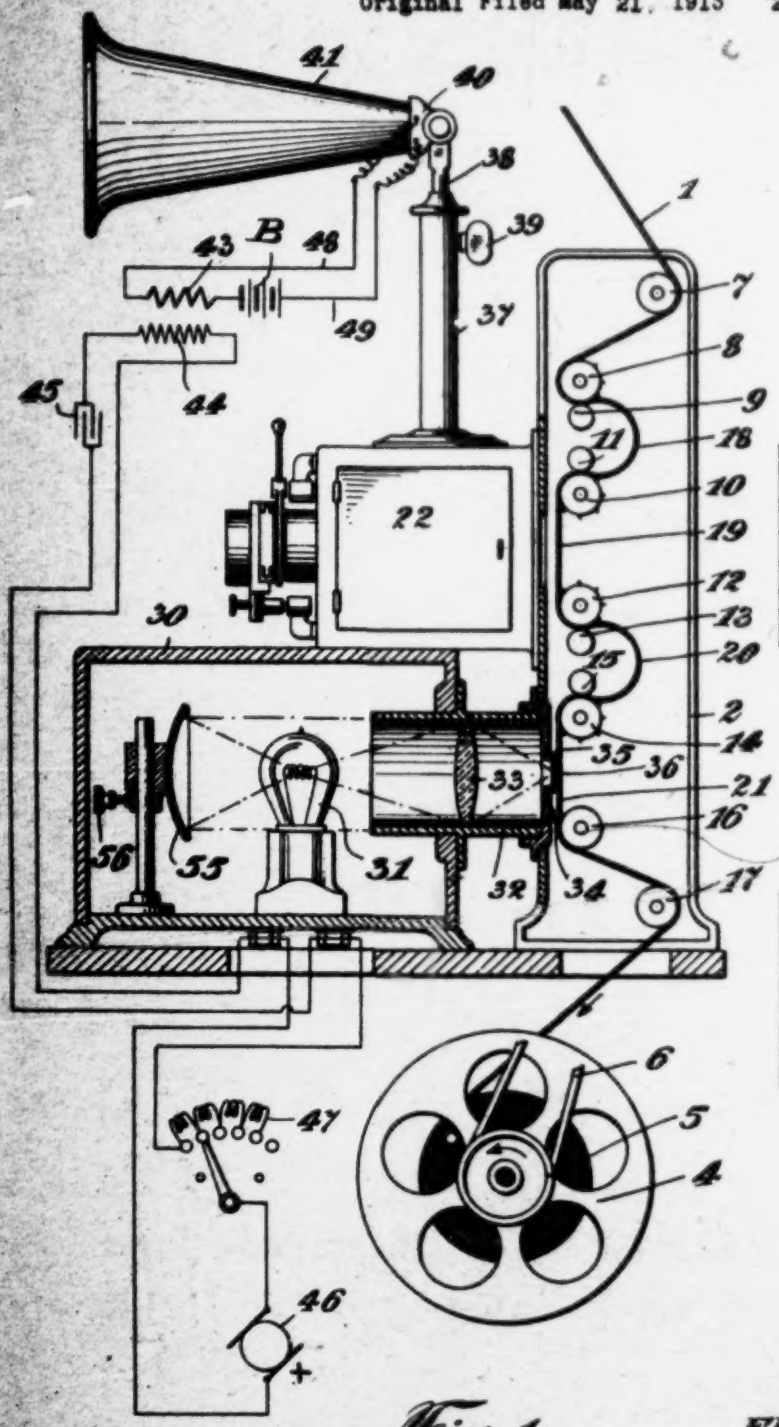

Fig. 1.

Fig. 2.

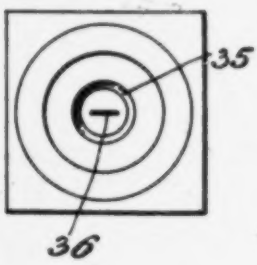

Fig. 3.

INVENTOR
Elias E. Ries
BY
George C. Sloan
his ATTORNEYS

592

Nov. 13, 1923. 1,473,976

E. E. RIES

SOUND RECORDING METHOD

Original Filed May 21, 1913 2 Sheets-Sheet 2

Fig. 4.

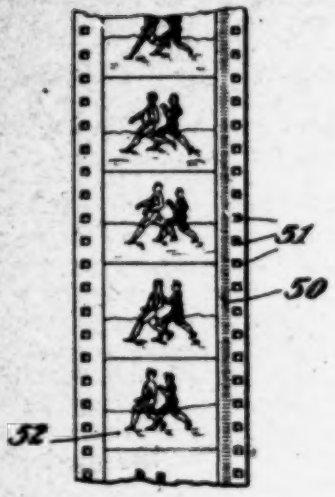

Fig. 5.

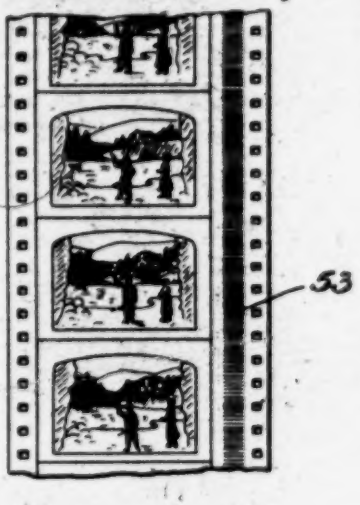

Fig. 7.

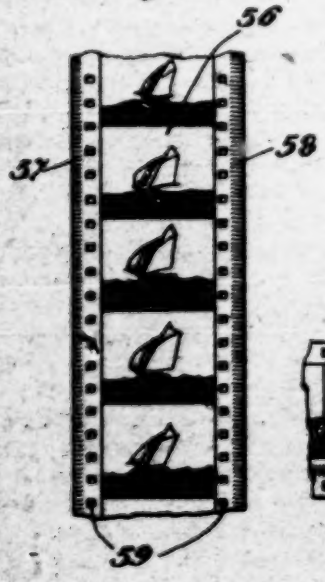

Fig. 8.

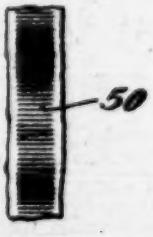

Fig. 6.

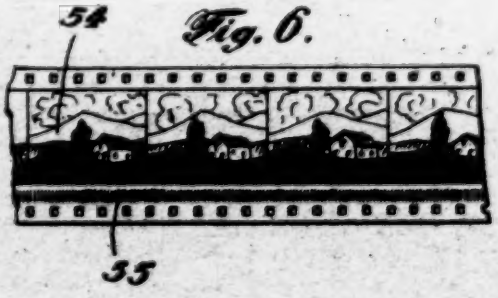

INVENTOR
Elias E. Ries
BY
George C. Dean
his ATTORNEYS

Patented Nov. 13, 1923. 1,473,976

UNITED STATES PATENT OFFICE.

ELIAS E. RIES, OF NEW YORK, N. Y., ASSIGNOR TO AMERICAN AUDIOSCOPE CO., INC., A CORPORATION OF NEW YORK.

SOUND-RECORDING METHOD.

Original application filed May 21, 1913, Serial No. 769,114. Divided and this application filed April 6, 1923. Serial No. 630,197.

To all whom it may concern:

Be it known that I, ELIAS E. RIES, a citizen of the United States, and resident of New York city, in the county of New York and State of New York, have invented certain new and useful Improvements in Sound-Recording Methods, of which the following is a specification.

My present invention relates to methods for the production of photographic records of sounds, whether vocal, musical or of other character, and of type such that the original sound can be accurately reproduced therefrom with facility. The invention, although in certain broader aspects thereof applicable to the preparation of sound records alone, has its preferred application to the production of talking picture film record, that is, to moving picture films bearing a succession of photographs of successive stages in the action, and taken in usual manner, and provided with one or more continuous sound records laterally of the picture which represent the amplitudes and phases of vibrations of the sonorous action, such as music, speech or the like, occurring and recorded simultaneously with the visual action.

The sound record is produced according to my invention, by causing undulatory variations in light intensity similar in form to the vibrations of the air accompanying the sonorous action, and subjecting narrow portions of the film in rapid succession to the influence of the varying light. The source of light is preferably a tungsten or other metal filament lamp of small power, although an arc lamp may be used, and the variations are imposed preferably by the well-known singing arc principle, in which the sound vibrations act upon a microphone, which automatically varies resistance in circuit with the lamp, in conformity with the sound vibrations, and effects synchronously therewith, undulatory variations in the light intensity. The exposure of the film to the varying light at any moment is limited to a portion definitely restricted in the direction lengthwise of the film, by moving the photographic film or other sensitized surface in close proximity or contact with an opaque screen having a very small aperture. This aperture or window is preferably in the form of a narrow slit, and is of much greater width than length, the width being governed by the available space on the photographic film outside of the usual sprocket holes or between the line of pictures and the sprocket holes when the sound record is to form part of a motion picture. For sound records only, the width of the aperture may be much greater, if desired; but the length, that is the dimension taken lengthwise of the sound record, should always be proportional to the length of the shortest sound waves to be recorded. By moving the photographic film or other sensitized surface in close contact with the perforated screen, the exposed area of the sensitized surface is definitely fixed under all conditions of light, and all diffusion of light beyond the area of the aperture is prevented so far as possible. It is preferred, moreover, to focus the light from the lamp in a pointed or conical pencil directed upon the window opening, as by the use of an appropriate spherical lens. The film is moved preferably at a uniform rate past the window aperture or slit, in photographing the sonorous action, at a speed such as to differentiate the imprints of the denser and more attenuated parts of the sound waves photographed seriatim, the period of photographic exposure being so related to the speed of the record and to the duration of said portions of sound waves as to prevent blurring or overlapping. By the combined use of the photographic film moving in close contact with the screen having the small window aperture and the focusing lens, the light from the lamp acts uniformly over the exposed part of the film, so that sharper variations in light intensity are imposed upon the successively exposed parts of the film, producing more distinct and more substantial differentiations in translucency of the developed film for better sound reproduction, than if the light were more widely diffused over the film.

This is particularly true where a small power tungsten filament or equivalent lamp is employed, operating at substantially rated current consumption, where the candle power will vary relatively widely with the relatively small increments or decrements of current due to the operation upon the microphone of the air waves accompanying the vocal or other sound.

In the preferred application to talking pictures, in which the sound record is photographed concurrently with the taking of the pictures, and upon a strip or border of the film laterally of the pictures, the rate of film advance is limited by the exigencies of moving picture requirements to a speed in the order of about one foot per second. As the sound records, unlike the visual records, should be substantially continuous, rather than discreet, they cannot be conveniently produced on the intermittently moving film, and are consequently recorded at a portion of the film beyond the shutter opening of the picture taking lens, that is, at a region where the film moves at uniform speed. In this application, the length of film momentarily exposed is highly restricted, being of a length in the order of that of a small pin hole, which length is traversed by the film, even at the relatively slow speed of moving picture operation, in the minute interval of a fraction of a sound wave.

In order that my recording method may be more clearly understood, I have shown in the drawings, more or less diagrammatically, apparatus by which the method may be executed, as well as the physical product resulting from the operation of the apparatus.

In the drawings:—

Fig. 1 is a view more or less diagrammatic, illustrating apparatus by which the method can be executed,

Fig. 2 is a detail view on an enlarged scale of one form of aperture plate for the sound camera,

Fig. 3 is a view similar to Fig. 2 of a modification,

Fig. 4 is a fragmentary view of a portion of one embodiment of phonoscopic film, produced according to my invention,

Figs. 5, 6 and 7 are views similar to Fig. 4 of modified forms of films, and;

Fig. 8 is a fragmentary view on a greatly enlarged scale, illustrating the appearance of a small segment of the sound record.

The present application is a division of my copending application, Serial No. 769,114, filed May 2, 1913.

Referring now to Fig. 1, the film 1 in its downward travel through casing 2, passes in succession over the upper guide roll 7, upper positively-driven feed sprocket or drum 8, and its guide roller 9, by the action of which the film is unwound at a uniform rate of speed from the upper reel (not shown) and is caused to form the upper loop 18. The film then passes between the upper intermittent sprocket 10 and its guide roller 11, down between the lower intermittent sprocket 12 and its guide roller 13, and forming the lower loop 20, thence between lower positively-driven sprocket 14 and its guide roller 15, thence downward in a vertical line under the guide roller 16 and over the guide roller 17, from which it is wound onto the lower film reel 4. Reel 4 is provided with the usual "take-up" device provided with a friction pulley or its equivalent 5 and driven by belt 6 from some uniformly revolving portion of the camera, which may be operated by hand or by a small motor (not shown) provided with a differential speed control which insures the proper taking up of the lower portion of the film at a uniform speed irrespective of the increasing diameter of the reel.

It will be observed that in addition to the two loops 18 and 20, the film in its passage, forms two vertical face sections 19 and 21, each approximately a trifle longer than the width of a single picture. The lower vertical film section 21 is in the focal plane of the sound camera 30. The upper section 19 is in the focal plane of the lens (not shown) of a moving picture camera 22 of any suitable construction, which exposes the central portion of the film shown in Figs. 4, 5, 6 or 7. The edge portion or portions of the film on which the photographic sound record is to be received are shielded from the light and are thus left unexposed during the transit of the film behind the shutter-opening of the picture-taking lens, which is preferably located, as shown, a short distance above the sound camera 30.

This sound camera consists of a casing containing an independent source of light, which may be a small tungsten or other metal-filament incandescent electric lamp 31 capable of being operated at a high degree of incandescence, although an electric arc lamp or any other suitable source of light may be used, if desired. Behind the lamp is mounted a standard 54 carrying an adjustment reflector 55 which may be secured upon the standard by the thumb-screw 56. The light of the lamp direct or reflected is thrown, as shown, by dotted lines, upon a spherical lens 33 in a tube 32 in the front of the casing 30. The tube is closed at its forward end by an adjustable cap-piece 34 having a raised central portion 35 pierced with either a narrow slit 36 (Fig. 2) or a small round or square pin hole opening 36′ (Fig. 3), said cap-pieces being preferably interchangeable. The moving film 1 travels downward in close proximity to the raised portion 35 and with that portion of its surface on which the sound is to be

recorded, for instance, lateral strip or border 50 (Fig. 4) directly in front of the light opening 36.

Mounted at the upper rear portion of the apparatus is shown a standard 37 containing an adjustable sliding rod 38, that may be extended and turned to any position and locked against displacement by wing nut 39. The upper end of rod 37 has a swivel joint into which is clamped a telephone transmitter or microphone 40, which is provided with a large tapering horn or megaphone 41, designed and adapted to collect the atmospheric sound waves and to direct and focus them upon the diaphragm of the transmitter 40. The minimum height of the horn 41 when the device illustrated in Fig. 1 is used in connection with a portable motion picture camera, is such that the entire camera mechanism, including the casing 30 containing the photophonic recording appliances, may be mounted as a single, self-contained unit below the line of swing of the horn. The sound receiving horn 41, may, however, be located at any convenient point either alongside of the camera or at any desired or suitable distance from the scene and sounds, to be photographed.

The transmitter 40, whether mounted on the apparatus or located at a distance therefrom, is in electrical circuit through the line wires 48 and 49, with a battery B in series with the primary winding 43 of an induction coil, whose secondary winding 44 is in series with a condenser 45 and with the terminals of the lamp 31, as shown. All of these devices in practice, are preferably included within the casing 30 or other enclosed portion of the apparatus. The terminals of the lamp 31 are likewise independently connected in the usual manner, by means of the circuit wires shown, with a suitable source of direct current, such as the generator 46, the voltage of which is regulated by rheostat 47.

In the operation of recording talking pictures, the visible phase of the performance or other occurrence combining visible and sonorous action, is recorded by the camera 22, in the usual manner for taking moving pictures. The horn 41 is disposed in appropriate relation to intercept the sound waves and the circuit of the lamp 31 is closed. The film moves intermittently between the rollers 10 and 12, taking moving pictures on the film section 19 in the regular manner, while the film section 21 moves past the pin hole or other narrow slit 36 in the sound recording camera, continuously at a uniform speed, usually about one foot per second, that is, at the mean speed of the moving picture camera film. It will be understood that the film section 19 is covered and screened from the light over the entire section except that part of the film which is opposite the usual picture aperture or window, and that film section 21 is likewise covered or screened by screen 35 except the small part opposite the aperture 36, and that the film in passing across the said screen 35 is held in such close proximity thereto by the feeding mechanism, or otherwise, that the light rays passing through the aperture 36 will act only on the film area limited by the size of said aperture.

Specifically, the sound waves entering the horn 41 from a distant point are concentrated upon the diaphragm of the microphonic transmitter 40, forcibly vibrating the same to vary the resistance of the primary circuit, containing the battery B and the primary coil 43. The latter induces undulating or alternating currents of high tension corresponding in form and frequency with the sound waves impinging upon the diaphragm, in the secondary coil 44, which currents pass across the condenser 45, and become superposed upon the steady current flowing through the lamp 31 from the dynamo or other source 46. The direct current from the source 46, it will be seen, cannot jump across the condenser 45, nor affect the induction coil 43, so that the net result of the variable current impressed upon the lamp 31 by the action of the transmitter 40 will be alternately and rapidly to increase and decrease the intensity of the light in exact accordance with the original sound waves. More particularly, induction coil 43—44 inducing currents flowing alternately in opposite directions through the lamp filament, as the microphone resistance alternately increases and decreases, those currents that flow with the normal lamp current serve to reinforce it and augment the candle power, while those that flow against the normal lamp current oppose it and cause a diminution of the normal luminosity.

The light from the lamp 31 passes into the tube 32 and impinges upon the spherical lens 33, which effectively concentrates or focuses the light upon the screen 35 so that the light passing through the fixed minute aperture 36 will act uniformly over the area of the film exposed by the aperture. The light from the lamp is thus effectively concentrated at any instant upon the relatively minute film areas momentarily exposed. Since, moreover, both the candle power and the actinic effect of the ordinary tungsten or other equivalent lamp operating at rated current consumption, change markedly with small increments or decrements of current, it follows that the degree of exposure of the film will very relatively widely with the relatively minute changes in lamp current, taking place synchronously with and proportionally to the varying amplitudes of sound or air vibration.

In other words, by the use of a small lamp of low power consumption, operating at high incandescence, I produce maximum variations in candle power with the small increments or decrements of current due to the action of the air or sound waves upon the microphone. These variations in candle power are, moreover, intensified with respect to the film by efficiently focusing the light from the lamp at the highly restricted definitely limited momentarily exposed area of the film.

It will be seen that the tungsten lamp operates silently, eliminating the humming due to the rapid expansion and contraction of the heated gas, such as produced in an arc lamp flame.

When developed the translucency of the sound record produced on the film, operated at the speed noted with the momentary exposure limited to the width of the slit or small pin hole opening, changes rapidly from moment to moment, with the density or attenuation of the successive fractions of sound waves, which are recorded seriatim, without objectionable blurring or overlapping. In Fig. 8 is shown on a greatly enlarged scale, the approximate appearance of a small segment of a sound record, which may represent a portion of a single sound wave. The sound record, it is seen, presents a substantially straight band made up of a succession of lights and shadows, in which the alternations of light and shade and the distance between them correspond with and represent the wave length, pitch or frequency of the original sound waves, while the degree of differentiation in translucency between lighter and darker areas corresponds to and represents amplitudes or loudness. The darker and lighter areas of the band will usually merge into one another in a continuous succession in the direction of the length of the film. The translucency at each point on the band representing the momentary amplitude of air vibration, it will be seen that the simplest, as well as the most complex sound waves will be accurately recorded. The picture and voice sections 19 and 21 of the film, are simultaneously exposed at their respective optical centers, as heretofore noted, with the latter somewhat in advance of the former. This apparent displacement will be automatically neutralized, and the voice and picture recorded simultaneously if the time interval between the picture and voice sections substantially equals that for the travel of the sonorous action from a distant source to the receiving horn 41. The length of loop 20 in the camera may be adjusted in accordance with the distance of the stage or other source of sound from the camera.

The receiving horn 41, it will be understood, may be placed nearer the stage than the camera and the voice transmitted from the horn to the camera electrically, in which case, the voice record will, of course, be impressed upon the film, with a lead relative to the corresponding picture.

In reproducing from the positive print of the negative film just described, the voice would be electrically transmitted from the projecting machine to the stage, and there telephonically reconverted into sound, with a lead relative to the corresponding picture, to compensate for the lag of sound relative to light, so that the visible and sonorous reproduction would reach the audience synchronously.

If desired, I may employ in lieu of the incandescent lamp, an arc lamp operated by direct current and burning with a steady light and at approximately constant temperature and luminosity. The variation in the current supply produced by sound vibrations directed upon the microphone connected in substantially the manner shown in the drawings, produces rapid variations in the candle power of the light, according to the singing or speaking arc principle. The arc lamp is preferably enclosed in a sound proof casing, so that the otherwise audible air vibrations set up thereby will not be heard.

It will be seen that whether the incandescent filament or arc lamp is employed, I produce undulatory variations in light intensity or candle power, similar in form to the vibrations of the air accompanying the vocal or other sonorous action, the varying light producing chemically a corresponding sound record upon the film, preferably taken concurrently with a record of the series of pictures of the scene. The film is developed to form a photographic negative and the combined picture and sound record may subsequently be transferred by photo-printing in the usual manner upon any desired number of positive films, from which the action is reproduced by a projection method and machine fully described in my copending parent application, heretofore mentioned.

It may be noted here that in the reproduction of my photographic sound record, the sound is in every respect identical whether it is reproduced from a negative or a positive print that is to say, that whereas in the negative the sound waves appear as light and dark sections or waves, corresponding sections or waves in the positive print will appear as dark and light, respectively, but the effect when projecting a beam of light through the film in either case to reproduce the sound waves recorded thereon will be the same.

In Figs. 4 to 7, I have illustratively shown various typical forms of "phonoscopic" or talking machine films produced by my method. In the embodiment of Fig. 4, the

sound record, indicated by the numeral 50, extends or runs in a vertical direction at one side of the film, a space being reserved for this record between the right-hand sprocket perforations 51 on that side of the film, and the edge portion of the series of pictures 52 nearest thereto.

Fig. 5 shows an extra wide film, such as I prefer to use in taking and reproducing dramatic or operatic performances, on a large scale, in which the entire stage, either with or without its proscenium arch as a frame for the setting may be shown. This film also has an extra wide space 53 for my sound record, produced as with the aperture cap shown in Fig. 2, in order to give it ample capacity for the reception and proper reproduction of the powerful sound vibrations of a large chorus and orchestra.

In Fig. 6 the pictures 54 are shown as running horizontally, and the sound record 55 as extending in a horizontal direction below the same. The purpose of this arrangement is to eliminate, or at least in a large degree to minimize, the objectionable flickering of the ordinary film and the reduction of illumination caused by the use of a shutter, without hampering the recording or reproduction of the sound record.

The film 56 of Fig. 7 is provided with a plurality of sound records, two of these 57 and 58 being here shown as extending along the edges of the film outside of the left and right hand sprocket holes 59 respectively. This embodiment permits the use of the existing standard size of motion-picture films without diminution of the size of the pictures, and also permits the impression of one or more photographic sound records upon those portions of the film not at present utilized for photographic purposes. In the embodiment of Fig. 7, it will be understood that two or more sound records, both related to the picture are simultaneously recorded upon the film for alternate or concurrent reproduction. The method of producing the film or record will be apparent from the following illustrative example.

Let the animated pictures 56 shown in Fig. 7 represent the theme of an "illustrated song" pertaining to the sea, to be reproduced alternatively as desired, either with combined vocal and musical accompaniment, or with musical accompaniment alone. In recording, the vocalist, who in this instance does not appear in the picture, sings into my transmitter, preferably at close range and with the proper piano accompaniment, the verses appropriate to the theme, all of which is impressed to form say the right-hand sound record 58 of the film in the manner apparent from Fig. 1 of the drawings and the previous description. The musical accompaniment only, minus the voice is concurrently impressed on the opposite edge 57 of the film to form the left-hand record, by means of a second separate and independent transmitter and recording light-beam (not shown) similar to that described and shown. This accompaniment may be that of another instrument, as a violin played in a room partitioned off and in sound insulated relation from that occupied by the vocalist or piano, or it may be that of the identical piano which accompanies the vocalist. In the latter case, the second transmitter may be placed within the sound box of the piano, where it will not be affected by the voice of the singer.

Another application is to multiple language demonstration films, in which a single picture is accompanied by a plurality of sound records, explaining the action in various languages. The film is produced in a manner analogous to that just described, the lectures in the various languages being recorded simultaneously with the picture, but independently on different bands of the same film.

Although I have herein shown and described my invention more particularly in connection with kinetoscopic or cinematographic films, I desire it to be understood that many of the features of my method are applicable to the production of one or more photographic records of vocal, musical or other sonorous action, independently of pictures.

My method, as herein disclosed, is not limited to the particular applications thereof, which I have illustrated in the drawings, but is broadly as well as specifically aplicable to numerous other purposes and capable of being carried out in various forms of phonographic, telephonic and other apparatus.

Having thus described my invention what I claim as new and desire to secure by Letters Patent of the United States is:—

1. The method of recording sound photographically, which consists in moving a body having a surface sensitive to light across the back of a screen having a small aperture, limiting the area of exposure to the area of the aperture, and varying the degree of exposure in accordance with sound waves impressed upon a sound translating device, whereby said sensitized surface when developed will present a continuous line or band having alternating sections of varying degrees of density or translucency throughout its length, the opposite extremes of density indicating the peaks of continuous waves corresponding to the sound waves impressed upon the sound translating device.

2. The method of recording sound photographically, which consists in moving a body having a surface sensitive to light across the back of a screen having a small

aperture which exposes the sensitive material to light in a continuous line or band of uniform width, limiting the area of exposure to the area of the aperture, and varying the intensity of the light in accordance with sound waves impressed upon a sound transmitting device for the purpose of producing corresponding variations in the degree of exposure of said sensitive material as the same is moved across the aperture.

3. The method of recording sound photographically, which consists in moving at a constant speed a body having a surface sensitive to light across the back of a screen having a small aperture which exposes the sensitive material to light in a continuous line or band of uniform width, limiting the area of exposure to the area of the aperture, and varying the intensity of the light in accordance with sound waves impressed upon a sound transmitting device for the purpose of producing corresponding variations in the degree of exposure of said sensitive surface as the same is moved across the aperture.

4. The method of recording sound photographically, which consists in moving a photographic film in the form of a strip or band across the back of a screen having a narrow aperture which exposes the sensitive material to light in a continuous line or band of uniform width throughout the length of the film, limiting the area of exposure to the area of the aperture, and varying the degree of exposure of said line or band in accordance with sound waves impressed upon a sound translating device, whereby said film when developed will present a continuous line or band of uniform width and alternating sections of varying degrees of density or translucency throughout its length, the opposite extremes of density indicating the peaks of continuous waves corresponding to the sound waves impressed upon the sound translating device.

5. The method of recording sound photographically, which consists in moving a photographic film in the form of a strip or band across the back of a screen having a narrow aperture which exposes the sensitive material to light in a continuous line or band of uniform width throughout the length of the film, limiting the area of exposure to the area of the aperture, and varying the intensity of the light by and in accordance with sound waves impressed upon a sound transmitting device for the purpose of producing corresponding variations in the degree of exposure of said sensitive material as the same is moved across the narrow aperture, whereby when the film is developed a record is produced on said photographic film in the form of a continuous line of band of uniform width and varying degrees of density or translucency throughout its length corresponding to the variations in light produced by the sound waves impressed upon the sound transmitting device.

6. The method of recording sound photographically, which consists in moving at a constant speed a photographic film in the form of a strip or band across the back of a screen having a narrow aperture which exposes the sensitive material to light in a continuous line or band of uniform width throughout the length of the film, limiting the area of exposure to the area of the aperture, and varying the intensity of the light by and in accordance with sound waves impressed upon a sound transmitting device for the purpose of producing corresponding variations in the degree of exposure of said sensitive material as the same is moved across the narrow aperture, whereby when the film is developed a record is produced on said photographic film in the form of a continuous line or band of uniform width and having alternating sections of varying degrees of density or translucency throughout its length, the opposite extremes of density indicating the peaks of continuous waves corresponding to the variations in light produced by the sound waves impressed upon the sound transmitting device.

7. The method of recording sonorous action by causing undulatory variations in light intensity, similar in form to the vibrations of the air accompanying the said action, and exposing a photographic film to the influence of the light only through a window aperture of the width of a small pin hole adjacent the film, while moving the film at a speed in the order of one foot per second to effect an imprint thereon lengthwise of the film, differentiated in accordance with the varying amplitudes of sound vibrations and limiting the area of exposure to the area of the aperture.

8. The method of recording sonorous action by causing undulatory variations in light intensity, similar in form to the vibrations of the air accompanying the said action, focusing the light in a pointed pencil toward a fixed point substantially in the plane of a photographic film moving at a rate of speed in the order of one foot per second, and through a window aperture adjacent the film, of substantially the width of a small pin hole and limiting the area of exposure to the area of the aperture.

9. The method of concurrently recording simultaneous visible and sonorous action upon a single photographic film, which consists in focusing the visible action upon the film during intermittent advance thereof at said focusing region, while focusing light directed in a pointed pencil toward a fixed point substantially in the plane of the film

and at a strip thereof laterally of the picture portion and at a region where the film moves at constant speed, and screening the film in the path of the variable light to expose an area limited in width in the direction of the moving film to the width of a small pin hole, said light having undulatory variations in intensity similar in form to the vibrations of the air accompanying the sonorous action.

10. The method of recording sound waves upon a traveling photographic film limited in speed to motion picture requirements, which consists of photographing thereon the denser and more attenuated portions thereof seriatim, the period of photographic exposure being so related to the speed of the film and to the duration of said portions of sound waves as to prevent overlapping or blurring, accomplished by varying the intensity of a beam of light in accordance with the varying amplitudes and phases of said waves, having said beam narrowed by a slit to adjust the period of exposure to the speed of the film and the duration of the parts of sound waves and limiting the area of exposure to the area of the slit.

11. The method of recording sound waves upon a traveling photographic film limited in speed to motion picture requirements, which consists of photographing thereon the denser and more attenuated portions thereof seriatim, the period of photographic exposure being so related to the speed of the film and to the duration of said portions of sound waves as to prevent overlapping or blurring, accomplished by varying the intensity of a beam of light in accordance with the varying amplitudes and phases of said waves, assisted by focusing said beam on said film through a slit to further define the characteristics of the shorter waves and limiting the area of exposure to the area of the slit.

12. The method of recording sound photographically, which consists in moving a photographic film in the form of a strip or band across an aperture plate, limiting the exposed area of the film to the area of the aperture by maintaining the film in close contact with said plate, moving the film at a constant speed across said aperture to expose the sensitive surface to light in a continuous line or band of uniform width, and varying the degree of exposure of said line or band in accordance with sound waves impressed upon a sound translating device, whereby said sensitized surface when developed will present a continuous line or band of uniform width and alternating sections of varying degrees of density or translucency representing continuous waves corresponding to the sound waves impressed upon the sound translating device.

13. The method of recording sound photographically, which consists in moving a photographic film in the form of a strip or band across an aperture plate, limiting the exposed area of the sensitive surface to a space of the order of a thin line by an aperture in said plate whose width is much greater than its length, maintaining the film in close contact with said plate to prevent diffusion of light, moving the film at a constant speed across said aperture to expose the sensitive surface to light in a continuous line or band of uniform width, and varying the degree of exposure of said line or band in accordance with sound waves impressed upon a sound translating device, whereby said sensitized surface when developed will present a continuous line or band of uniform width and alternating sections of varying degrees of density or translucency representing continuous waves corresponding to the sound waves impressed upon the sound translating device.

14. The method of producing motion pictures and photographic sound records concurrently upon the same photographic film, which consists in moving a photographic film through a camera at a speed adapted to produce a given number of pictures per second, simultaneously moving said film at the same rate per second across the back of a screen having a narrow aperture which exposes the sensitized surface to light in a continuous line or band parallel to the line of pictures and of uniform width throughout its length, limiting the area of exposure to the area of the aperture, and varying the degree of exposure of said line or band in accordance with sound waves impressed upon a sound translating device, whereby said sensitive surface when developed will present adjacent to the pictures a continuous line or band of uniform width and having alternating sections of varying degrees of density or translucency representing continuous waves corresponding to the sound waves impressed upon the sound translating device.

15. The method of producing motion pictures and photographic sound records concurrently upon the same photographic film, which consists in moving a photographic film through a camera at a speed adapted to produce a given number of pictures per second, simultaneously moving said film at the same rate per second across the back of a screen having two narrow apertures by which the sensitized surface is exposed to light in two continuous lines or bands parallel to the line of pictures, and each band being of uniform width throughout its length, limiting the areas of exposure of each band to the areas of the respective apertures and varying the degree of exposure of said lines or bands by and in accordance with sound waves impressed upon a sound transmitting device, whereby said sensitized sur-

face when developed will present adjacent to the pictures two bands each of uniform width throughout and having alternating sections of varying degrees of density or translucency representing continuous waves corresponding to the sound waves impressed upon the sound transmitting device.

16. The method of producing motion pictures and photographic sound records concurrently upon the same photographic film, which consists in moving a photographic film through a camera at a speed of approximately one linear foot per second, simultaneously moving said film at the same rate of speed across the back of a screen having a narrow aperture which exposes the sensitized surface to light in a continuous line or band parallel to the line of pictures and of uniform width throughout its length, limiting the area of exposure to the area of the aperture, and varying the intensity of the light by and in accordance with sound waves impressed upon a sound transmitting device for the purpose of producing corresponding variations in the degree of exposure of said sensitized surface as the same is moved across the narrow aperture, whereby said sensitized surface when developed will present adjacent to the pictures a continuous line or band of uniform width and having alternating sections of varying degrees of density or translucency representing continuous waves corresponding to the sound waves impressed upon the sound transmitting device.

17. The method of producing motion pictures and photographic sound records concurrently upon the same photographic film, which consists in intermittently moving a photographic film through a camera at a speed adapted to produce a given number of pictures per second, simultaneously moving said film continuously and uniformly at the same rate per second across the back of a screen having a narrow aperture which exposes the sensitized surface to light in a continuous line or band parallel to the line of pictures and of uniform width throughout its length, limiting the area of exposure to the area of the aperture, and varying the degree of exposure of said line or band in accordance with sound waves impressed upon a sound translating device, whereby said sensitized surface when developed will present adjacent to the pictures a continuous line or band of uniform width and having alternating sections of varying degrees of density or translucency representing continuous waves corresponding to the sound waves impressed upon the sound translating device.

18. The method of producing motion pictures and photographic sound records concurrently upon the same photographic film, which consists in intermittently moving a photographic film through a camera at a speed of approximately one linear foot per second, simultaneously moving said film continuously and uniformly at the same rate of speed across the back of a screen having a narrow aperture which exposes the sensitized surface to light in a continuous line or band parallel to the line of pictures and of uniform width throughout its length, limiting the area of exposure to the area of the aperture, and varying the intensity of the light by and in accordance with sound waves impressed upon a sound transmitting device for the purpose of producing corresponding variations in the degree of exposure of said sensitized surface as the same is moved across the narrow aperture, whereby said sensitized surface when developed will present adjacent to the pictures a continuous line or band of uniform width and having alternating sections of varying degrees of density or translucency representing continuous waves corresponding to the sound waves impressed upon the sound transmitting device.

19. The method of producing motion pictures and photographic sound records concurrently upon the same photographic film, which consists in intermittently moving a photographic film at a speed of approximately one linear foot per second through a camera having a lens for taking a series of pictures in single line sequence representing objects in motion, simultaneously moving said film continuously and uniformly at the same rate of speed across the back of a screen having two narrow apertures by which the sensitized surface is exposed to light in two continuous lines or bands parallel to the line of pictures, and each band being of uniform width throughout its length, limiting the areas of exposure of each band to the areas of the respective apertures, and varying the degree of exposure of said lines or bands by and in accordance with sound waves impressed upon sound transmitting devices, whereby said sensitized surface when developed will present adjacent to the pictures two bands each of uniform width throughout and having alternating sections of varying degrees of density or translucency representing continuous waves corresponding to the sound waves impressed upon the sound transmitting devices.

Signed at New York city, in the county of New York and State of New York, this 5th day of April, 1923.

ELIAS E. RIES.

PLAINTIFF'S EXHIBIT No. 27

I Certify this, including the Drawing forming part thereof, to be a true Copy
22 MAR 1922
Acting for Comptroller.

[Second Edition.]

PATENT SPECIFICATION.

Convention Date (Germany): Mar. 3. 1919. 157,433
Application Date (in United Kingdom): Jan. 10. 1921. No. 1360/21.
Complete Accepted: Mar. 9. 1922.

COMPLETE SPECIFICATION.

Apparatus for Synchronous Reproduction of Optical and Acoustic Operations, for the Purposes of Acoustic Kinematography.

We, HANS VOGT, Engineer, of 9, Konigsweg, Berlin-Schoneberg, Dr. JOSEF ENGL, Physician, of 17, Orberstrasse, Grunewald, and JOSEPH MASSOLLE, Engineer, of 60, Cunostrasse, Grunewald, all in Germany, all citizens of the German Republic, do hereby declare the nature of this invention and in what manner the same is to be performed, to be particularly described and ascertained in and by the following statement:—

For the purpose of acoustic kinematography it is, as is well known, necessary to be able both to record and to reproduce the optical and acoustic operations synchronously and the present invention relates to improved apparatus for reproducing optical and acoustic incidents from a previously obtained synchronous record of both. The invention has for its object to provide reproducing means of this description, in which the optical and acoustic operations are reproduced in such a degree of synchronism that acoustic kinematography may be realized in a practical form.

For the reproduction of sound from photographic records of sound vibrations upon a kinematographic film it has been proposed to employ a telephone receiver, electrically connected to a selenium cell, the resistance of which cell alters according to the varying amount of light which reaches it through the variously blackened portions of the moving film.

According to this invention the undistorted reproduction of sound vibrations which have been recorded optically in synchronism with the series of pictures upon a kinematograph film is effected by employing a constant source of light which plays upon a photoelectric cell consisting of a vessel containing a gas under reduced pressure and provided with two electrodes, of which the cathode is an alkali metal preferably so treated as to give it an alkali hydride surface. When electrically coupled to a suitable reproducing telephone, a photoelectric cell of this kind gives a more faithful reproduction of the original sound vibrations than is obtainable when a selenium cell is employed, and, as a further feature of our invention, we may enhance the effect of the photoelectric cell by connecting it in circuit with a condenser excited by undamped high frequency oscillations.

In carrying this invention into practice, in order to reproduce the optically registered acoustic frequencies which appear upon the strip of film in the form of varied degrees of blackening, the said film is acted upon by a constant source of light, the pencil of rays from which is rhythmically varied in its intensity by the blackenings on the passing film and falls upon a photoelectric cell containing a rare gas and having an alkali metal cathode preferably so treated to give it an alkali hydride surface. If the cathode be exposed to light, electrons are emitted under the action of the tension impressed on the electrodes and form a current which flows through the cell. The strength of this current at any given instant is dependent on the strength of the light to which the cathode is exposed at that instant. A suitable method of treating the alkali metal cathode to produce an alkali hydride surface, consists in subjecting the surface of the alkali metal (such as potassium) to the action of a fluorescent discharge in hydrogen (so that, in the case of the example cited, potassium hydride is formed on the treated surface): As examples of rare

[Price 1s.]

602

gases suitable for introduction into the cell in a rarefied state may be mentioned, helium, neon or argon. It is clear that the operation of such a cell is maintained only by electrodes and the gas interposed between them: therefore the current variations will follow the fluctuations of light produced by the photographic sound record without any appreciable inertia.

The variations in the resistance of the photoelectric cell may advantageously be utilised to set up current fluctuations in an oscillating circuit, supplied with undamped high frequency oscillations, the condenser of said oscillating circuit being connected in parallel to said cell and the damping of said circuit being influenced by the resistance set up by the cell.

By these means sufficient intensities of sound can be produced even in large spaces.

In the accompanying drawings, which illustrate practical embodiments of the several features of our invention:—

Figure 1 shows part of a film on which both pictures and sound records appear.

Figure 2 is a diagrammatic view showing the manner in which the sound is reproduced.

Figure 3 shows means for coupling the photoelectric cell in an electric oscillating system.

The section of film illustrated in Figure 1 contains both pictures and sound records which have been recorded synchronously by suitable apparatus, which however, does not constitute part of the present invention.

In order to effect synchronous reproduction of the optical and acoustic incidents thus recorded, the film passes through a kinematographic projector (not shown) and through the apparatus (see Figure 2) for the reproduction of the sound records.

The actual operation of reproducing the sound vibrations takes place as follows:—

The source of light *l* uniformly emits a constant beam of light which is projected by the optical system *o* and the slit *s* in the form of a small focal line onto that part of the film which contains the sound records in the form of varied degrees of blackening. By reason of the movements of the film, the quantity of the light which passes through onto the photoelectric cell *z* is varied in the rhythm of the original acoustic frequencies of which the record was taken. Fluctuations of current are produced in the photoelectric cell *z* by the varying quantity of the light which falls upon it and these fluctuations are amplified by a cathode tube intensifier apparatus *v* and thence transmitted to a suitable reproducing telephone *t* which converts the fluctuations of the current into sound again.

In Figure 3 the photoelectric cell *z* is shown connected in parallel with the condenser of a tuned oscillating circuit A^2 which is excited by the circuit A^1 and transmits energy to the reproducer circuit A^3. By reason of the variations in the resistance of the photoelectric cell the damping of the circuit is influenced in the rhythm of the sound waves.

Having now particularly described and ascertained the nature of our said invention and in what manner the same is to be performed, we declare that what we claim is:—

1. Apparatus for the synchronous reproduction of optical and acoustic operations for the purposes of acoustic kinematography and wherein the varied blackening of a strip of the combined picture and sound record film is used for reproduction of the sound vibrations, characterised by the fact that the said strip is played upon by a constant source of light which acts upon a photoelectric cell consisting of a vessel containing a gas under reduced pressure and provided with two electrodes of which the cathode is an alkali metal preferably so treated as to give it an alkali hydride surface.

2. Apparatus according to Claim 1 characterised by the fact that the photoelectric cell is connected up in parallel to a condenser circuit fed with undamped high frequency oscillations so that electrical fluctuations are produced in rhythm with the photographically recorded sound vibrations.

Dated this 10th day of January, 1921.

HASELTINE, LAKE & Co.,
28, Southampton Buildings, London, England, and
Park Row Building, 15, Park Row, New York, N.Y., U.S.A.,
Agents for the Applicants.

Hereford: Printed for His Majesty's Stationery Office, by The Hereford Times Ltd.
[Wt. 87a—125/11/1928.]

157,433 COMPLETE SPECIFICATION

1 SHEET

2nd Edition

Fig. 2.

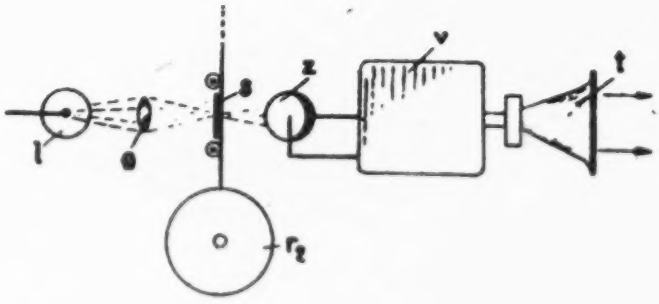

Fig. 3.

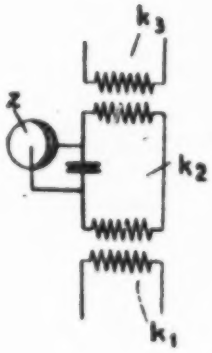

Fig. 1.

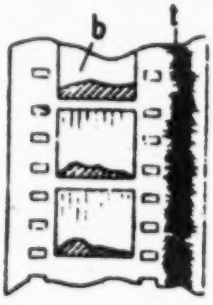

[This Drawing is a reproduction of the Original on a reduced scale.]

Charles & Read Ltd. Photo Litho

PP
6.2 Fielder.

NUMBER (Series of 1915),
704899

PLAINTIFF'S EXHIBIT No. 28

1924

CASE 8 1656255

(EX'R'S BOOK) 46-46

DIV. 7

PATENT No. 1656255

Name EDWARD C. WENTE JAN 17 1928

Assoc. to Western Electric Company, Incorporated, of New York N.Y., a Corp. of New York.

of NEW YORK

State of NEW YORK

Invention

TALKING MOTION PICTURE PRODUCTION

ORIGINAL

APPLICATION FILED COMPLETE APR 8, 1924

PARTS OF APPLICATION FILED

Petition, Specification, Oath, First Fee, $20, 1 sheets Drawings, APR 8, 1924

Examined and passed for Issue June 13, 1927

C. G. Parker Exr. Div. 7

Notice of Allowance June 16, 1927 By Commissioner

Final Fee $20 Dec. 16, 1927

RENEWED

43

, 192

Exr. Div.

, 192 By Commissioner

, 192

JAN 17 1928

Patented , 192

Attorney DE WITT C. TANNER & JOHN G. ROBERTS 463 WEST ST NEW YORK N Y

Associate Attorney E. W. ADAMS 463 WEST ST NEW YORK N Y

J. C. R. Palmer, 463 West St, New York N.Y.

(No. of Claims Allowed 4) Print Claims 2 in O. G. (Cl. 88-162)

Title as Allowed Talking & Motion & Picture Production

Division of App., No. , filed , 19

Address

605

UNITED STATES PATENT OFFICE.

PETITION AND POWER OF ATTORNEY

APR 7 1924

Case 8 704,899

TO THE COMMISSIONER OF PATENTS,
Washington, D. C.

2,555

Your petitioner EDWARD C. WENTE,

a citizen of the United States, residing at New York City,

in the County of New York,

and State of New York,

whose post-office address is 554 West 114th Street, New York City, New York, , prays that Letters Patent may be granted to him for the improvement in TALKING MOTION PICTURE PRODUCTION,

, set forth in the annexed specification; and he hereby appoints De Witt C. Tanner (Reg. No. 4325) and John G. Roberts (Reg. No. 9084) of No. 463 West Street, New York, New York, severally, his attorneys, with full power of substitution and revocation, to prosecute said application, to make alterations and amendments therein, to receive the patent, and to transact all business in the Patent Office connected therewith.

And your petitioner requests that communications from the Patent Office in connection with this application be addressed to the said JOHN G. ROBERTS, 463 WEST STREET, NEW YORK, N. Y.

Edward C. Wente

ASSOCIATE POWER OF ATTORNEY.

Please recognize E. W. ADAMS (Reg. No. 3213) of 463 West Street, New York, New York, as my associate attorney in the above mentioned application, with full power to prosecute said application, to make alterations and amendments therein, to sign the drawings, and to transact all business in the Patent Office connected therewith.

All communications, however, are to be addressed to me as above requested.

John G. Roberts
Attorney for Applicant.

APR - 7 1924

~~TO ALL WHOM IT MAY CONCERN:~~

Be it known that I, EDWARD C. WENTE, a Citizen of the United States of America, residing at New York City, in the County of New York and State of New York, have invented certain new and useful improvements in TALKING MOTION PICTURE PRODUCTION, of which the following is a full, clear, concise and exact description.

This invention relates to the reproduction of variations of energy states, for example the reproduction of changes of scene and concurrent variations of sound as instanced in the making of talking motion pictures.

An object of the invention is to facilitate such reproductions.

A special object is to simply and effectively produce a plurality of records, at least one of which may be positive, of variations of different energy states, on one and the same record bearing medium $\frac{1}{m}$ as, for instance to produce an effective kinetophonic film, or positive motion picture film containing a photographic sound record in proper position to produce synchronism between the pictures and the sounds as reproduced.

For brevity and clearness, the invention is disclosed herein with especial reference to its application in the production of talking motion pictures, though it is not necessarily to be regarded as limited to that art.

It is an object of the invention to increase the upper limit of the sound frequencies which may be recorded on the positive picture film.

A further object is to obtain the desired contrast in the sound record on a positive picture film without unduly limiting the control of contrast in the positive pictures.

Another object is to eliminate objectionable noise due to the granular character of the emulsion on which the original sound record is made.

Another object is to obtain a sound record on a positive picture film and yet permit the camera and the sound recorder employed in making the original sound and picture records to be moved about independently and also permit the same camera to be used without alteration for both talking and silent motion pictures.

Another object is to obtain a sound record on a positive picture film and yet permit deletion of any portion of either the positive or the negative picture record without causing undue discordance between the pictures and sounds as finally reproduced.

A still further object is to photographically print a negative picture record and a sound record onto a homogeneous record medium and yet permit independent control of the exposure of these records during the printing.

In the embodiment of the invention specifically illustrated and described herein, these various objects are attained by recording the pictures and the sounds on two separate negative films, preferably with the sound film running faster than the picture film, and when these negatives have been developed, photographically printing them both on to one and the same film, for instance in a manner described hereinafter.

Further objects of the invention will appear from the following detailed description and claims taken in connection with the accompanying drawings in which:

Fig. 1 represents a sound recorder and a camera for obtaining separate negative film records of concurrently varying sounds and scenes; Fig. 2 is a diagrammatic elevation, partly in section, of one form of apparatus for photographically printing the two negative records on a common film, to form a positive motion picture film carrying the sound record, this figure showing an edge view of the three films in operating relation to the printing apparatus; and Fig. 3 is a fragmentary section through line 3-3 of Fig. 2, looking in the direction of the arrows, with portions omitted, the front or face of the positive film and of the negative picture film appearing in Fig. 3.

In Fig. 1 a sound recorder 10, preferably of the type recording the sound as a series of striae of various exposures, and a motion picture camera 11 are electrically connected as indicated at 9, and are driven synchronously, but preferably with the sound film running at a speed of the order of twice the speed of the picture film, supposing that the sounds to be recorded are speech, for instance. The desired film speed ratio can be obtained, for example, by properly adjusting the relative speeds of the motors (not shown) which drive the films, or by interposing the proper gears or the like (not shown) between the motors and the films. In reproducing changing scenes and sounds by the method involving the present invention, this camera and sound recorder or any other suitable means, are employed to obtain a negative motion picture film 13 (Figs. 2 and 3) and a photographic film 20 (Fig. 2) containing a record of sounds concurrent with the scenes depicted on film 13, the sound film so obtained preferably having been run faster than the picture film during the recording, and preferably having recorded the sound as an exposed band with transverse striature such that after development of the film the band will exhibit striae of various densities after the fashion fancifully indicated at 8 in Fig. 3.

These records after being properly developed and fixed, are photographically printed on a sensitized film 12, for instance as indicated in Figs. 2 and 3 and described hereinafter, with the printed records on film 12 so positioned with respect to each other as to produce synchronism between the pictures and the sounds when the film 12 is later passed through the proper picture projecting and sound reproducing apparatus (not shown), which may be of any suitable type. Where, as usual, the film is moved intermittently in its

projection and the sound record moves continuously during its reproduction, the various portions of the sound record will ordinarily be printed not exactly opposite the corresponding pictures, but relatively displaced an amount approximately equal to the length of film between the portion of the picture being projected at any instant and the portion of the sound record being reproduced at that instant. If this displacement is made sufficiently small, any discordance between the pictures and sounds as finally reproduced, due to deletion of any length of the positive film necessitated for instance by damage to that film, will be substantially unnoticeable. This advantage can be attained by constructing the picture projecting and sound reproducing means so that the length of film between the picture being projected and the sound being reproduced is not greater than about four inches (a limitation easily satisfied) since with such a construction the corresponding time displacement between the pictures and sounds as reproduced is only about a quarter of a second when the positive film with the usual 16 pictures per foot is run at the usual speed of 20 pictures a second. The editing of the film may all be done before a positive print is made, so that cutting out of any portion of the negative need result in none of the discordance which might be created if the sound record and the pictures were made on the same negative.

It is here pointed out that in a talking motion picture system heretofore proposed, in which the picture negatives and the negative sound record are made on one common film from which the picture positives and the positive sound record are printed on another common film, the minimum possible displacement between the picture and sound records on either

film is greater than the minimum length of the positive film which it would be possible (by modification of the picture projector and sound reproducer) to preserve between the place at which the pictures are projected and the place at which the sound is reproduced; for the minimum possible displacement between the records is determined by the minimum possible length of the negative film between the place at which the pictures are recorded and the place at which the sound is recorded, and this length is influenced by the requirements of the construction of the camera and sound recorder, such as the requirement that the camera should be portable and the requirement that the film in the camera be carefully protected at all times against unintentional exposure to light, which have no counterpart in the requirements of the construction of the picture projector and sound reproducer.

In the operation of photographically printing the records carried by films 13 and 20 upon the film 12, the films 12 and 13, in contact with each other, pass downward over sprocket wheels 18 and 18', the film 12 being driven by a sprocket wheel 24 from a gear wheel 33 which derives its motion from a shaft 32 turned by a gear wheel 31 driven from any suitable source of power (not shown) . In their downward travel the films pass an adjustable aperture 15 in a mat, screen or shutter 14. The film 13 is between the film 12 and the mat 14. A source of light 19, illuminating a portion of the film through aperture 15, causes the picture negatives carried by film 13 to be photographically printed on film 12 as positives. However, the mat 14 shields the left hand marginal portion of film 12 from the light source 19, as indicated in Fig. 3, thus reserving that portion of film 12 for the sound record which is to be printed on the film.

In Fig. 3 there is shown at 12a a length of the positive film 12 upon which pictures, fancifully indicated by dotted lines, but no portions of sound record, have been printed. Actually, of course, the picture positives would not be apparent before development of the film 12. By adjusting the shutter opening 15 the amount of light used in printing the negative pictures upon film 12 as positives can be regulated.

The picture positives having been printed on film 12, that film, preferably alone, travels downward over sprocket wheels 23 and 24, passing a slit or narrow aperture 17 in a mat 16. The sound negative 20 passes downward over sprocket wheels 21 and 22, sprocket 22 being driven from the gear 31 by means of a gear 34. In Fig. 2 a source of steady illumination is shown at 25, and an optical system is so arranged that an image of a narrow illuminated line on the negative sound film 20 at point 26 is obtained at point 30, for example by means of the lens 27, a narrow opening at point 28, a lens 29, and a cylindrical lens 29'. The function of lens 29' will be pointed out hereinafter. At the point 30 the narrow line image is photographed or printed upon a portion 12a of the positive film 12. In Fig. 3 there is shown at 12b a length of the positive film 12 upon which both the picture and the sound records have been printed, as fancifully indicated. The gears 31 and 34 preferably drive the sprocket wheel 22 at such speed that the sound negative 20 moves faster than the portion 12a or 12b of the film 12. The relative speeds should here be the same as the relative speeds used for the sound negative and the picture negative in making those records.

Both the sound record and the pictures having been printed on film 12, the film may be developed and the records fixed upon it.

As indicated above, the length of film 12 between apertures 15 and 17 should preferably be not greater than about four inches.

As pointed out above, one of the advantages of taking sound and picture records on separate negatives is that the sound film may, if desired, be run at greater speed than that customary for making picture films. The highest possible film speed for making the sound negative will depend upon the character of the films available. It has been found desirable, especially in the case of sound records involving frequencies of the order of several thousand cycles per second, to make the negative sound record at a film speed twice that used to make the picture negative, when films of the character of Eastman super-speed film are employed to make the negative sound records and film of the character of Eastman positive motion picture film are employed to make the positive records. As indicated above, this two to one ratio in the relative speeds of the negatives may be obtained, for example, by making proper adjustments in the speed of the motors driving the sound recorder and the camera, or by interposing the proper speed changing means between the motors and the negatives. As noted above, the same speed ratio which exists in the running of the sound and picture negatives while they are being made should preferably be maintained when the two negatives are driven for printing on the common positive. This may be done, for example, by making the size of the driving gear of the sprocket wheel 22 half as large as the gear on sprocket wheel 31, as shown in Fig. 2 and indicated in the description above.

One of the chief advantages of making the sound record on a negative running at twice the speed of the motion picture film results from the fact that a photographic emulsion of high sensitivity has inherently a coarse grain structure.

For instance, the Eastman super-speed motion picture film has such a coarse granular structure that its resolution is only about half as great as that of the Eastman positive motion picture film. The upper limit of frequencies that may be recorded will, therefore, be twice as great for the positive as for the negative film for the same linear speed; or in other words, the same range of frequencies may be recorded on the positive at one half the speed of the negative.

For correct sound reproduction it is important that the development of the positive and negative be so carried out that the transmission of the positive is at every point proportional to the exposure of the negative. This is in general not the best condition for the pictures as under these circumstances they will usually be too harsh. In the system here proposed the picture negative and positive can be developed to give the most pleasing results for pictures, and yet the negative of the sound record can be so developed that when it is printed on the picture positive film, the required contrast is obtained in the positive sound record.

In order to get strict proportionality between illumination of the negative and transmission of the printed positive, in addition to proper development it is desirable that the exposure of both positive and negative shall always remain on the straight part of the characteristic curves of the photographic emulsions. Even with high power lenses and an intense source of steady illumination it has been found desirable to use ~~the Eastman~~ a super-speed film for the sound negative in recording speech, for instance, in order to bring the illumination up to the point where the exposure falls on the straight portion of the characteristic curve. Now this ultra speed film has a coarse granular structure. The granular

structure of the film tends to result in an accompanying noise in the reproduction, which is very similar to the scratch of the needle of the ordinary phonograph. A way of reducing this noise is to increase the width of the record; the effect of the individual grains on the light transmission during reproduction will then average out more nearly. The space available for a sound record on the picture film is, however, limited, so that a wide record is ordinarily not feasible. By the use of a printer such as is here described the effect of the grain size in the negative may be eliminated. A wide record may be made on the negative, the print of which on the positive may then be reduced by means of the optical system to the required width. The imprint on the positive of the individual grains in the negative will thereby be greatly reduced. If a cylindrical lens be interposed in the optical system, for instance as indicated at 29', no sharp image of the grains in the negative will be formed and they will not be reprodubed on the positive, whereas, if a contact print were made the coarse grains of the negative would be reproduced on the positive. Since the speed of the positive affects only the speed at which prints can be made, an emulsion of very fine granular structure can be used and scratching noise in the reproduction can thus be reduced to a minimum.

Due to variations in lighting conditions and in the character of the objects being photographed, motion picture negatives may vary greatly in density throughout the length of a single roll of film. It is customary to correct for this by varying the intensity of the light used for making positive records from the negatives. Sound records on negative films, on the other hand, may be produced under more easily controllable conditions, so that usually no such correction is required

or desirable, or if required the correction will be different from that of the corresponding portion of the picture record. In accordance with this invention a separate lighting means is used for the picture and sound records, respectively, during the printing. With this arrangement the exposure of the positive motion picture record can be varied, as for instance by varying the width of the opening 15 in the manner common in the art, or varying the intensity of the light 19 by any known or suitable means (not shown), without correspondingly varying the exposure of the sound record, and if desired the exposure of the sound record can be independently varied. It is of course possible to simultaneously vary the width of the opening 15 and the intensity of the light from source 19, to vary the exposure of the films 13 and 12 to the light from source 19.

The optical system diagrammed in Fig. 2 is a practical one; but the results attained thereby can be achieved in various ways. Similarly, although Figs. 2 and 3 show one practical arrangement for printing the negative pictures on the positive film, it is to be understood that other means, for instance a standard step-by-step printer, might be employed, part of the positive film being masked, however, as in the arrangement shown in Figs. 2 and 3, to leave sufficient space for the sound record. In fact, the principles of the invention claimed may be embodied in many organizations differing from those specifically illustrated and described.

WHAT IS CLAIMED IS:

1. The method of recording concurrent sets of variations of states of energy of different kinds, which comprises producing a record of one set on one record medium, producing a negative record of another of said sets on a separate record medium, reproducing said one record on a record medium, and reproducing said negative record on said medium as a positive record.

2. The method of recording variations of energy states which comprises producing a record of said variations on a surface of relatively low resolution, and reproducing said record on a surface of relatively high resolution.

3. The method which comprises producing a record of variations of energy states on a record surface of relatively low resolution and reproducing said record in reduced size on a record surface of relatively high resolution.

4. The method which comprises reproducing, in reduced width, on a surface of high resolution, a record of variations of energy states which is on a surface of relatively low resolution and is characterized by thin parallel lines traverse of the record.

5. In reproducing concurrent sets of variations of states of energy of different kinds, the method which comprises producing a record of one of said sets on one moving record medium, producing a record of another of said sets on another record medium moving at a speed different from that of said one record medium, and reproducing said two records on a common record medium.

Insert a/2

2a ~~6~~. In reproducing concurrent sets of variations of energy states, the method which comprises producing a record of one of said sets on one record medium, producing a record of another of said sets on another record medium, and reproducing said two records on a common record medium with the two first mentioned record media moving relatively to each other during such reproduction.

per a Cancelled per B

3a ~~7~~. In reproducing changing scenes and concurrent sounds, the method which comprises simultaneously producing a negative motion picture film of said scenes and a negative film record of said sounds with said negative sound film moving at a higher speed than said negative picture film, and reproducing said two records on a common record medium with said negative sound film moving faster than said negative picture film.

8. In reproducing concurrent set of variations of states of energy of different kinds, the method which comprises simultaneously producing a record of one of said sets and a longer record of said other set.

Cancelled per a

9. In reproducing concurrent sets of variations of states of energy of different kinds, the method which comprises simultaneously reproducing records of said sets to different scales.

10. In reproducing concurrent sets of variations of states of energy of different kinds, the method which comprises reproducing records of said sets on a common record medium.

Cancelled per B

4a ~~11~~. The method of printing a positive film record from a plurality of negative records which comprises exposing said positive film to light through said negative records with one of said negative records moving at a speed different from that of another of said negative records.

Grant A3

12. In combination, a light source, means for moving a positive photographic film and a contacting negative motion picture film at constant speed past said light source with said negative between said positive and said source, a second light source, means for moving a photographic sound record film, at greater speed than said negative motion picture film, between said second light source and the moving positive film, and an optical system interposed between said sound record film and said positive film for photographically printing said sound record on said positive film.

der A Cancelled per B

13. In combination, means for reproducing on a record medium a record of a set of variations of states of energy of one kind, and means for reproducing on said record medium a concurrent set of variations of states of another kind of energy.

Cancelled per A

14. In combination, means for photographically printing a sound record from a negative film onto a positive film, and means for photographically printing pictures from a separate negative film onto said positive film.

Cancelled per B

15. In combination, means for simultaneously moving and reproducing on a record medium a record of a set of variations of energy states, and means for moving at a different speed and reproducing on said record medium a record of another set of variations of energy states, while said first movement is in progress.

Cancelled per A

16. In combination, means for reproducing a record of a set of variations of energy states, and means for simultaneously, and to a different scale, reproducing a record of a concurrent set of variations of energy states.

17. In combination, a continuous printer for photographically printing pictures from a negative film onto a positive film, and means for photographically printing a sound record from a separate negative film onto said positive film.

16. In combination, a photographic film containing a negative sound record, a sensitized film on which said negative record is to be reproduced as a positive record, a source of printing light for illuminating a portion of said negative film, means for moving said films relatively to said light source, and means comprising a lens system interposed between said film for subjecting said positive film to light transmitted from said source through said negative film.

19a 19. In combination a sensitized record surface of relatively high resolution, a record including thin parallel lines on a photographic film of relatively low resolution, and a light source and an optical system for printing said record on said record surface, said optical system comprising a cylindrical lens with its axis ~~parallel to one of said parallel lines, for increasing the sharpness of the reproduced record lines as they appear on said record surface.~~ in the plane of said film

Cancelled per Bx

per A

20. A talking motion picture film having thereon pictures forming a record of changing scenes and also having thereon a record of sounds concurrent with said scenes, respectively, the displacement between said pictures of the respective scenes and the corresponding portions of said sound record representing sounds concurrent with the respective scenes being at least as small as four inches, and said pictures being of such length that sixteen occupy at least about a foot of said film.

Cancelled per A

21. In combination, means for producing, on a photographic film, pictures of changing scenes, and means for producing on said film a record of sounds concurrent with said scenes respectively, which has each of its portions within a distance of four inches from the picture corresponding to that portion, measured along the film.

22. The method of printing a positive record film from a plurality of negative records which comprises exposing said positive film to light through said negative records, and separately controlling the light through one of said negative records.

23. The method of printing a record film from a plurality of records at least one of which is a negative record, which comprises independently illuminating said records, and exposing said film to said illumination through said records simultaneously.

24. The method of printing a positive talking motion picture film from a picture negative record and a sound negative record, which comprises exposing the medium on which said first record is to be produced to light through said negatives records, and separately controlling the light through one of said negative records.

25. The method of printing a positive sound and motion picture film from a picture negative and a sound record, which comprises simultaneously exposing said film to light through said negative and through said record, and separately controlling the light through said picture negative.

26. In combination, a positive film, a plurality of negative records, and means for simultaneously printing said negative records on said positive film comprising a

plurality of sources of light, one individual to each of said negative records.

27. In combination, a positive film, a negative motion picture film record, a negative sound record, and means for simultaneously printing said negative records on said positive film, said means comprising two sources of light, one individual to each of said negative records.

28. Means for simultaneously printing positive picture and sound records from a negative picture record and a negative sound record, said means comprising means for independently illuminating said negative records.

29. In combination, a positive film, a negative motion picture film record, a negative sound record, and means for simultaneously printing said negative records on said positive film, said means comprising two light sources individual to said negative records and means whereby the exposure of said picture negative may be varied and said negative sound record simultaneously subject to a constant exposure.

30. In combination, a positive film, a negative motion pictur film record, a negative sound record, and means for simultaneously printing said negative records on said positive film, said means comprising means for varying the relative exposures of said negative records during said printing.

31. A process of forming sound and motion picture records which consists of forming a photographic negative record of a changing scene, forming a photographic negative record of sound accompanying the scene, separately developing said records

and thereafter printing said records on a single positive film.

32. A process of forming sound and motion picture records which consists of forming a photographic negative record of a changing scene, forming a photographic negative record of the sound accompanying the scene, the width of this record being of the order of double the width required for its reproduction on the positive film, separately developing said records and thereafter printing said records on a single positive film with the sound record reduced to the required width.

33. A process of forming sound and motion picture records which consists of forming a photographic negative record of a changing scene, forming a photographic negative record of the sound accompanying the scene, with the speech film running at a speed of the order of twice that of the picture film, and separately printing said records on a single positive film with the negative sound record reduced in width and in length.

BLL:BF

In Witness Whereof, I hereunto subscribe my name
this 1st day of April, A. D. 1924

Edward C. Wente

OATH.

State of NEW YORK
County of NEW YORK } ss.

EDWARD C. WENTE the above named petitioner, being duly sworn, deposes and says that he is a citizen of the United States, and resident of New York City, in the County of New York, and State of New York, and that he verily believes himself to be the original, first, and sole inventor of the improvement in TALKING MOTION PICTURE PRODUCTION, described and claimed in the annexed specification; that he does not know and does not believe that the same was ever known or used before his invention or discovery thereof; or patented or described in any printed publication in any country before his invention or discovery thereof, or more than two years prior to this application, or in public use or on sale in the United States for more than two years prior to this application; that the said invention has not been patented in any country foreign to the United States on an application filed by him or his legal representatives or assigns more than twelve months prior to this application; and that no application for patent on said improvement has been filed by him or his legal representatives or assigns in any country foreign to the United States, ~~except as follows~~:

Edward C. Wente

Sworn to and subscribed before me
this 1st day of April, 1924

Notary Public.

[illegible]
Commission Expires March 30th, 1926

625

Div. 7 Room 312 2-280 RFP Paper No. 2

Address only "The Commissioner of Patents, Washington, D. C." and not any official by name.

All communications respecting this application should give the serial number, date of filing, title of invention, and name of the applicant.

DEPARTMENT OF THE INTERIOR

UNITED STATES PATENT OFFICE

WASHINGTON October 15, 1924.

PATENT OFFICE, OCT 15 1924 MAILED

John G. Roberts,
463 West St.,
New York, N. Y.

Please find below a communication from the EXAMINER in charge of the application of

E. C. Wente, TALKING MOTION PICTURE PRODUCTION,
April 8, 1924, 704,899.

Thomas E. Robertson
Commissioner of Patents.

Page 4 lines 19-21, the examiner queries the statement that striae will be formed. The film moves continuously while the sound waves fluctuate and therefore the image would blur or carry over and give no thin or threadlike line or lines.

Page 5, lines 14-16, and page 8 lines 1-3, it is not believed to be possible to bring the sound record and picture record within four inches of each other longitudinally of the film. From the statement of lines 17-19 it would seem that the intention was to have the selenium cell and picture projector side by side as this would be the only obvious way to displace the time of production; but this would render the device inoperative as the sound record must travel continuously while the picture record moves step by step. Therefore the selenium cell and picture projector could not be in the same plane transverse of the film. Further, four inches of the film means five pictures, a loop must be maintained to adjust for the intermittent travel necessary in picture production, guide and driving sprockets

are necessary and it is therefore not seen how room within four inches is left for two simultaneous exposures.

Page 7, lines 14 and 15, the types of film should be defined by the characteristics of the film as supplemental to the trade name. The composition might easily be varied over a period of years. Line 15, "film" should be -films-.

Page 10, lines 13-18, when the imprint of the wide record is reduced, the imprint of the grains will be reduced proportionally. It is not understood how a proportionate reduction will change the relation between the grain structure and the sound record. The statement that the use of a cylindrical lens will eradicate the evidence of grain structure upon the positive is thought to be erroneous.

Claims 1, 10, 13, 14, 17, 21, 23, 26-28, and 31 are rejected on;

Greensfelder, 1,254,884, Jan. 29, 1918, 88-16.2

Note Figs. 5 and 6 and page 3, line 128 to page 4, line 8 and page 5, line 128-to-page 6 line 4. Here the negatives are taken separately and reproduced on the same positive film.

Claims 2 to 4 are rejected on;

Brown et al. 1,034,192, July 30, 1912, 95-5

See page 1 lines 87-109.

Claims 5 to 7 and 11 are rejected on Greensfelder cited, in view of;

Tigerstadt, 100,748, Mar. 20, 1919, (British, 1 sheet) 88-16.2

To follow the teaching of Tigerstadt page 1 lines 14 to 19

in the production and reproduction as accomplished by Greensfelder would not be invention.

The sound record being longer than the picture record, in order that both may be reproduced within the length of the shorter record, it is obvious that the longer must travel faster than the shorter, and no invention is involved.

Claims 4 and 19 are objected to, see comment on lines 19-21 of page 4.

Claim 6 is further rejected as vague. It is not included whether the record media move relatively to each other during production or reproduction.

Claims 8, 9 and 16 are rejected on Nigerstadt, cited above. The application is obvious.

Claims 9 and 16 are further rejected as vague and confusing in the use of the term "different scales". This would seem to mean either one unit for measuring pictures and a different kind of unit for measuring sound since sound and picture do not have a common basis or else different linear scales along the film as to the amount of room each record occupies.

Claims 10, 13, 14, 17, and 21 are further rejected on;

Vogt, 178,442, Nov. 16, 1922,
(no drawing) page 1 lines 72-74
(British,) 88-16.2

Claims 12 and 15 are rejected on;

Dyer et al. 970,614, Sept.20, 1910,
95-75

in view of;

Jobke, 1,344,896, June 29, 1920,
88-24 Continuous Copy.

Dyer shows a device for printing two negatives upon the

same positive. To use the means of Jobke for printing the second negative in which the negative move faster than the positive would not require invention.

Claim 18 is further rejected as indefinite, line 6, "at greater speed" than what?.

Claim 18 is rejected on Jobke cited above, or;

Hochstetter, 1,325,198, Dec. 16, 1919, 88-24 C. C.

The application is obvious.

Claim 19 is rejected on Hochstetter in view of Brown et al. both cited. To use the fast and slow films of Brown et al. in the device of Hochstetter would not be more than substitution.

Claim 19 is further rejected as inaccurate. The axis of the lens is not parallel to the film as stated in line 6.

Claim 19 is further rejected as based on matter not shown or described. No mention is made in the specification concerning sharpness of the image.

Claims 20 and 21 are rejected on;

Bullis, 1,335,651, Mar. 30, 1920, 88-16.2

Applicant has merely made a change in degree without obtaining any new result.

Claims 20 and 21 are further rejected as inoperative, see comment to lines 14 to 16 page 5 and lines 1 to 3 page 8.

Claims 23, 24, 25, 29 and 30 are rejected on Greensfelder cited in view of either;

Holst, 1,205,632, Nov. 21, 1916, 95-75

or

Tessier, 1,208,582, Nov.21, 1916, 95-75

The use of the device of Holst or of Tessier in reproducing the negatives of Greensfelder would only require mechanical skill. No invention would be involved, for Holst and Tessier show a light which has the intensity varied during the film printing and Greensfelder shows film printing of concurrent energy states.

Claim 32 is rejected on Greensfelder in view of Jobke both cited above. This reduction of continuous strip pictures is taught by Jobke and to reduce one of the records of Greensfelder would not be patentable thereover.

Claim 33 is rejected on Greensfelder in view of; Tigerstadt and Jobke all cited above. Modifying the idea of Greensfelder as broadly as stated in the claim when it is old to run the sound record more rapidly than the picture strip and also old to reduce the size of a record by relatively moving positive and negative does not patentably define over the art.

Examiner, Division 7.

Amendment a

Case 8 # 3

OCT 7 1925

UNITED STATES PATENT OFFICE.

Division 7 Room 312

U. S. Patent Office
OCT 8 1925
DIVISION VII

In re application of

EDWARD C. WENTE

Subject: TALKING MOTION PICTURE PRODUCTION.

Serial No. 704,899

Filed April 8, 1924

THE COMMISSIONER OF PATENTS,
Washington, D. C.

Sir:

In response to the Office action of October 16, 1924, please amend as follows:

Page 3, line 16, erase "to";
line 29, change "5-5" to --3-3--.

Page 7, line 13, change "3" to --2--.

Page 8, line 7, erase "best" and insert --highest--;
line 8, erase "for" and insert --possible in--;
erase the subject matter beginning with "It has", line 9, and ending with "records", line 16 and substitute --In general, it is necessary to employ a high speed film for this purpose in order to obtain sufficient exposure. With the type of high speed films at present available, it has been found desirable, particularly when recording sound involving frequencies of the order of several thousand cycles per second,

a'

to make the negative sound record at a film speed twice that commonly used in making the picture negative.

line 28, change "3" to --2--.

Page 9, line 27, erase "the Eastman" and insert --a--.

Cancel claims 1 to 5, inclusive; 8 to 10, inclusive; 13 and 14; 16 to 18, inclusive; and 20 to 33, inclusive.

Claim 6, line 7, after "other" insert --during such reproduction--.

Claim 12, line 6, after "speed" insert --than said negative motion picture film--.

Claim 19, line 6, erase "parallel" and insert --in the plane of said film.--;

erase lines 7 to 9, inclusive.

Insert claim 1 as follows:

--1. The method of printing a record film from a plurality of records at least one of which is a negative record, which comprises independently illuminating said records, and simultaneously exposing different longitudinal portions of said film to said illumination through said records.--.

Cancelled per [illegible]

Renumber claims 6, 7 and 11 as claims 2, 3 and 4, respectively.

Insert claims 5 and 6 as follows:

5. A process of forming sound and motion picture records which consists of forming a photographic negative record of a changing scene, forming a photographic negative record

of the sound accompanying the scene, with the sound negative running at a speed of the order of twice that of the picture negative, and simultaneously printing said records on a single positive film with the sound negative running at a speed of the order of twice that of the picture negative.

add B'

Cls 2-4

a 3

~~6. In combination, a positive film, a negative motion picture film record, a negative sound record, and means for simultaneously printing said negative records on different longitudinal portions of said positive film, said means comprising two sources of light, one individual to each of said negative records.--.~~

Cancelled per B

Renumber claims 12, 15 and 19 as claims 7, 8 and 9, respectively.

R E M A R K S

Typographical errors and other informalities throughout the specification have been corrected.

As to the Examiner's query in the first paragraph of the Office action, it is well known that sound may be recorded in the form of transverse striations without blurring the image. The trace produced upon the film in this manner is of uniform width, but the optical density varies from point to point in accordance with the instantaneous pressure or rarefaction in the sound waves. Incidentally, Bullis patent 1,535,651, cited by the Examiner, discloses this method of recording sound (see particularly Figs. 2, 9 and 11; and page 4, lines 71-86).

According to the second paragraph of the Office action, the Examiner appears to be confused as to the manner in which applicant's completed film may be employed in a projectoscope. The picture projecting and sound reproducing apparatus,

of course, form no part of applicant's present invention, and therefore have not been described in detail. Nothing can be found in the statement on page 5, lines 17 to 19 of the specification, which would indicate that a selenium cell and picture projector must be mounted side by side in the projectoscope, such a procedure being obviously impossible. Applicant's completed film might be projected by means of the apparatus shown in Fig. 6 of the cited Greensfelder patent 1,254,684. From a consideration of this apparatus it would seem obviously possible to provide room within about four inches for two simultaneous exposures, although in applicant's invention the distance between the corresponding pictures and sound records need not be exactly four inches.

The reference on page 8 of the specification to "Eastman super-speed films" has been canceled since the particular type of high speed film employed is immaterial. The only important point in this connection is that a suitable high speed film must be employed in order to obtain a sufficient exposure when the film is run at a speed sufficient to record the upper range of speech frequencies without blurring. The reference to Eastman films in the first paragraph on page 9, however, has been retained merely to illustrate the different characteristics of typical positive films and super-speed films at present available.

In connection with page 10, lines 13 to 18 of the specification, the statement that the use of a cylindrical lens will eradicate the evidence of grain structure upon the positive film is entirely correct. The use of a cylindrical lens to get a focus in only one direction is well known, but, so far as applicant is aware, has never been employed in the production of sound records as disclosed and claimed in this application. Since a focus is obtained in only one direction by the use of a cylindrical lens, the imprint of the individual

grains in the negative will be distributed fairly evenly over the positive film, thus obliterating all evidence of grain structure.

The rejected claims, with the exception of claims 6, 7, 11, 12, 15 and 19, have been canceled. Of the claims which have been retained, claims 6, 12 and 19 have been amended to more clearly define the invention.

The claims as now presented are drawn to a novel and patentable arrangement for improving the quality of talking motion picture films, and for increasing the upper limit of the sound frequencies which may be recorded thereon.

It is pointed out in the specification that the higher speech frequencies may be more accurately recorded by running the sound negative at a greater speed than that ordinarily employed in motion picture production, for otherwise the transverse striations produced upon the sound negative might blur. Applicant therefore makes the speech and picture records separately in order to secure the best results in the individual records. It may be noted here, however, that this problem is not presented in the recording system of Greensfelder patent No. 1,254,684, since Greensfelder does not produce an oscillograph record of sound waves. This point is important because it has a bearing upon Greensfelder's method of printing the records on the common positive film which, as will be pointed out below, is essentially different from that of applicant.

Applicant's invention consists, briefly, in the novel manner in which the completed sound and picture records are printed on a single positive film. This includes printing the sound record upon the positive film in such a way that it will be relatively displaced an amount approximately equal to the length of film between the portion of the picture being projected at any instant and the portion of the sound record being reproduced at that instant.

Claims 1 and 6 have been drawn along the lines of original claims 23 and 27, which were rejected on Greensfelder, and are now believed to be clearly patentable over Greensfelder in specifying that different longitudinal portions of the positive film are simultaneously exposed to independent illumination through the negative records. It is pointed out beginning on page 5, line 128 of the Greensfelder patent, that the two negatives are placed side by side in printing the common positive.

Claims 2, 3 and 4 comprise original claim 6 as amended, and original claims 7 and 11, respectively. These claims are believed to be clearly patentable over the cited references, taken singly or collectively. It is difficult to understand how the methods of Greensfelder and Tigerstedt could be combined to produce a common positive film in the manner claimed by applicant without the exercise of invention. As far as producing a common positive film is concerned, Greensfelder merely prints the two records side by side in a manner well understood in photography, while Tigerstedt discloses no means whatever for producing a common positive. Claim 5, which has been drawn somewhat along the lines of original claim 33, is also believed to be clearly patentable over the cited art in that it specifies simultaneously printing the sound and picture records on a single positive film with the negative sound record running at a speed about twice that of the negative picture record.

Claims 7 and 8 comprise original claims 12 and 15, the former having been amended to overcome the Examiner's objection to its indefinite form. These claims also distinguish from the cited art, including the Dyer and Jebke patents, in that they call for running the sound and picture negatives at different speeds during the reproducing operation. Furthermore, the Examiner's statement that Dyer shows a device for printing

two negatives upon the same positive appears to be erroneous as Dyer simply prints different portions of the negative b upon the positive film a.

Claim 9, formerly claim 19, has been amended to overcome the inaccuracies pointed out by the Examiner. The advantages of employing an optical system including a cylindrical lens, as specified in this claim, have been pointed out above. The use of a cylindrical lens in this connection is not disclosed in any of the cited patents.

It is believed that this application has been placed in condition for allowance.

Respectfully,

EDWARD C. [illegible]

By [signature]
Attorney

463 West Street
New York, N. Y. OCT - 6 1925

DM:EM

6337

Div. 7 Room 106 WCF-AH Paper No. 4.

Address only "The Commissioner of Patents, Washington, D. C." and not any official by name

DEPARTMENT OF COMMERCE
UNITED STATES PATENT OFFICE
WASHINGTON

All communications regarding this application should give the serial number, date of filing, and name of the applicant

Please find below a communication from the EXAMINER in charge of this application

Thomas E. Robertson
Commissioner of Patents

January 7, 1926.

Applicant: E.C.Wente.

John O. Roberts
463 West St.,
New York City.

Ser. No. 704,899.
Filed Apr. 8, 1924.
For Talking Motion Picture Production.

MAILED
JAN 7 1926.

The amendment filed October 7, 1925 is of record.

Additional reference made of record:

ULYSSE, 1,161,210, Nov. 30, 1915. (88-24 C.C.).

Claims 1, 4, 6, and 8 are rejected as not patentably distinguishing from the above patent. As indefinitely as stated, it is immaterial whether series 1, 2, 3, etc., and I, II, III, etc., are on the same negative or different negatives. Merely causing the negatives to travel at different speeds would not involve invention and, as indefinitely as claimed, no useful result would necessarily follow. Unless the relative speed maintained between the negatives in the course of recording thereon was maintained in printing said records on a positive film synchronization between sound and picture would not result and no useful purpose would be served. The claims should define such relation.

Claims 2, 3, 4, 7, 8, and 9 are rejected as not defining invention for reasons stated above. In claim 9, line 6, appears inaccurate as the "axis of the lens" is not "in the plane of the film". Use of a cylindrical lens as claimed is not considered patentable in view of Bullis, 1,335,651, of record, who shows an analogous use of such a lens designated by numeral 22.

Claim 5 is allowed.

Claims drawn to projection printing are classifiable under 88-24 (projecting apparatus), while claims for synchronization of sound and picture records are classifiable under 88-16.2 (motion picture apparatus combined with sound producers). The claims in the case are drawn to divisible subject matter. Division is not required at this time as the claims drawn to the printing are not considered patentable.

Examiner.

PAPER NO. 6
AMENDMENT B

DEC 31 1926

UNITED STATES PATENT OFFICE.

Division 7 Room 106

U. S. PATENT OFFICE
JAN 3 1927
DIVISION VII

In re application of

EDWARD C. WENTE

Case 8

Serial No. 704,899

Filed Apr. 8, 1924

Subject: TALKING MOTION PICTURE PRODUCTION

THE COMMISSIONER OF PATENTS,
Washington, D. C.

Sir:

In response to the Office action of January 7, 1926, please amend the above entitled application as follows:

Erase claims 1, 2, 3, 4, 6, 7, 8 and 9 and renumber allowed claim 5 as claim 1.

Insert the following new claims, numbered 2, 3 and 4:

2. The method of producing a combined sound and moving picture record on the same film, which consists in forming a photographic negative of the changing scene, forming a photographic negative record of the sound accompanying the scene with the sound record running at a greater speed than the picture negative, and simultaneously printing the two records on a single positive film while maintaining the same relative speeds of the two negatives as in recording.

3. The method of producing a combined sound and moving picture record on the same film, which consists in forming a photographic negative of the changing scene, forming a photographic negative record of the sound accompanying the scene on a high speed negative film run at about double the

(6339)

speed of the negative of the changing scene and simultaneously printing the two negative records on different portions of a positive film while running the two negatives at the same relative speed as in recording.

4. The method of producing a synchronized sound and moving picture record on the same film, which consists in forming a photographic negative of the changing scene, simultaneously forming a photographic negative of the sound accompanying the scene on a negative film run at approximately double the speed of the picture negative and simultaneously printing the two negatives on a positive film, the picture by contact and the sound through an optical system while maintaining the same relative speed of the negative as in recording.

Sig

REMARKS

The rejected claims have been canceled and new claims 2, 3, and 4 drawn along the lines of allowed claim 5 have been inserted.

These new claims point out steps in the production of a combined sound and moving picture record on the same film which are believed to be novel with this applicant and a favorable action upon the case as amended is requested.

Respectfully,

EDWARD C. WHITE

By Joel R. Palmer
Attorney

463 West Street
New York, N.Y., DEC 30 1926

GMC:MJ

Jan. 17, 1928. 1,656,255

E. C. WENTE

TALKING MOTION PICTURE PRODUCTION

Filed April 8, 1924

Fig. 1

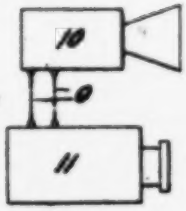

Fig. 3

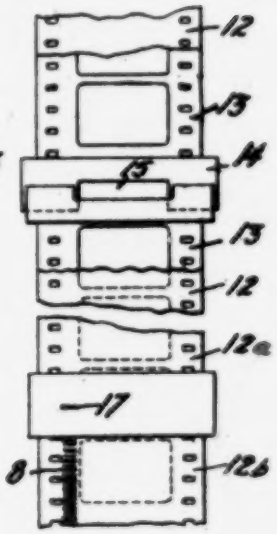

Fig. 2

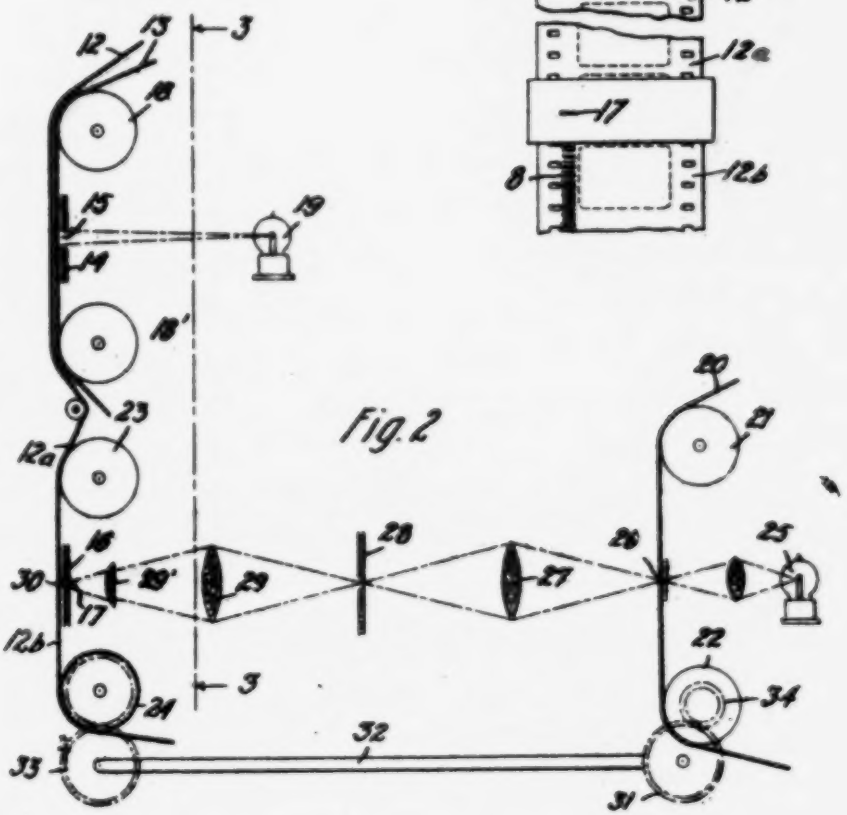

Inventor:
Edward C. Wente
by Atty

Patented Jan. 17, 1928. 1,656,255

UNITED STATES PATENT OFFICE.

EDWARD C. WENTE, OF NEW YORK, N. Y., ASSIGNOR TO WESTERN ELECTRIC COMPANY, INCORPORATED, OF NEW YORK, N. Y., A CORPORATION OF NEW YORK.

TALKING-MOTION-PICTURE PRODUCTION.

Application filed April 8, 1924. Serial No. 704,899.

This invention relates to the reproduction of variations of energy states, for example the reproduction of changes of scene and concurrent variations of sound as instanced in the making of talking motion pictures.

An object of the invention is to facilitate such reproductions.

A special object is to simply and effectively produce a plurality of records, at least one of which may be positive, of variations of different energy states, on one and the same record bearing medium—as, for instance to produce an effective kinetophonic film, or positive motion picture film containing a photographic sound record in proper position to produce synchronism between the pictures and the sounds as reproduced.

For brevity and clearness, the invention is disclosed herein with especial reference to its application in the production of talking motion pictures, though it is not necessarily to be regarded as limited to that art.

It is an object of the invention to increase the upper limit of the sound frequencies which may be recorded on the positive picture film.

A further object is to obtain the desired contrast in the sound record on a positive picture film without unduly limiting the control of contrast in the positive pictures.

Another object is to eliminate objectionable noise due to the granular character of the emulsion on which the original sound record is made.

Another object is to obtain a sound record on a positive picture film and yet permit the camera and the sound recorder employed in making the original sound and picture records to be moved about independently and also permit the same camera to be used without alteration for both talking and silent motion pictures.

Another object is to obtain a sound record on a positive picture film and yet permit deletion of any portion of either the positive or the negative picture record without causing undue discordance between the pictures and sounds as finally reproduced.

A still further object is to photographically print a negative picture record and a sound record onto a homogeneous record medium and yet permit independent control of the exposure of these records during the printing.

In the embodiment of the invention specifically illustrated and described herein, these various objects are attained by recording the pictures and the sounds on two separate negative films, preferably with the sound film running faster than the picture film, and when these negatives have been developed, photographically printing them both on one and the same film, for instance in a manner described hereinafter.

Further objects of the invention will appear from the following detailed description and claims taken in connection with the accompanying drawings in which:

Fig. 1 represents a sound recorder and a camera for obtaining separate negative film records of concurrently varying sounds and scenes; Fig. 2 is a diagrammatic elevation, partly in section, of one form of apparatus for photographically printing the two negative records on a common film, to form a positive motion picture film carrying the sound record, this figure showing an edge view of the three films in operating relation to the printing apparatus; and Fig. 3 is a fragmentary section through line 3—3 of Fig. 2, looking in the direction of the arrows, with portions omitted, the front or face of the positive film and of the negative picture film appearing in Fig. 3.

In Fig. 1 a sound recorder 10, preferably of the type recording the sound as a series of striæ of various exposures, and a motion picture camera 11 are electrically connected as indicated at 9, and are driven synchronously, but preferably with the sound film running at a speed of the order of twice the speed of the picture film, supposing that the sounds to be recorded are speech, for instance. The desired film speed ratio can be obtained, for example, by properly adjusting the relative speeds of the motors (not shown) which drive the films, or by interposing the proper gears or the like (not shown) between the motors and the films. In reproducing changing scenes and sounds by the method involving the present invention, this camera and sound recorder or any other suitable means, are employed to obtain a negative motion picture film 13 (Figs. 2 and 3) and a phonographic film 20 (Fig. 2) containing a record of sounds concurrent with the scenes depicted on film 13, the sound film so obtained preferably having been run faster than the picture

film during the recording, and preferably having recorded the sound as an exposed band with transverse striature such that after development of the film the band will exhibit striæ of various densities after the fashion fancifully indicated at 8 in Fig. 3.

These records after being properly developed and fixed, are photographically printed on a sensitized film 12, for instance as indicated in Figs. 2 and 3 and described hereinafter, with the printed records on film 12 so positioned with respect to each other as to produce synchronism between the pictures and the sounds when the film 12 is later passed through the proper picture projecting and sound reproducing apparatus (not shown), which may be of any suitable type. Where, as usual, the film is moved intermittently in its projection and the sound record moves continuously during its reproduction, the various portions of the sound record will ordinarily be printed not exactly opposite the corresponding pictures, but relatively displaced an amount approximately equal to the length of film between the portion of the picture being projected at any instant and the portion of the sound record being reproduced at that instant. If this displacement is made sufficiently small, any discordance between the pictures and sounds as finally reproduced, due to deletion of any length of the positive film necessitated for instance by damage to that film, will be substantially unnoticeable. This advantage can be attained by constructing the picture projecting and sound reproducing means so that the length of film between the picture being projected and the sound being reproduced is not greater than about four inches (a limitation easily satisfied) since with such a construction in the corresponding time displacement between the pictures and sounds as reproduced is only about a quarter of a second when the positive film with the usual 16 pictures per foot is run at the usual speed of 20 pictures a second. The editing of the film may all be done before a positive print is made, so that cutting out of any portion of the negative need result in none of the discordance which might be created if the sound record and the pictures were made on the same negative.

It is here pointed out that in a talking motion picture system heretofore proposed, in which the picture negatives and the negative sound record are made on one common film from which the picture positives and the positive sound record are printed on another common film, the minimum possible displacement between the picture and sound records on either film is greater than the minimum length of the positive film which it would be possible (by modification of the picture projector and sound reproducer) to preserve between the place at which the pictures are projected and the place at which the sound is reproduced; for the minimum possible displacement between the records is determined by the minimum possible length of the negative film between the place at which the pictures are recorded and the place at which the sound is recorded, and this length is influenced by the requirements of the construction of the camera and sound recorder, such as the requirement that the camera should be portable and the requirement that the film in the camera be carefully protected at all times against unintentional exposure to light, which have no counterpart in the requirements of the construction of the picture projector and sound reproducer.

In the operation of photographically printing the records carried by films 13 and 20 upon the film 12, the films 12 and 13, in contact with each other, pass downward over sprocket wheels 18 and 18′, the film 12 being driven by a sprocket wheel 24 from a gear wheel 33 which derives its motion from a shaft 32 turned by a gear wheel 31 driven from any suitable source of power (not shown). In their downward travel the films pass an adjustable aperture 15 in a mat, screen or shutter 14. The film 13 is between the film 12 and the mat 14. A source of light 19, illuminating a portion of the film through aperture 15, causes the picture negatives carried by film 13 to be photographically printed on film 12 as positives. However, the mat 14 shields the left hand marginal portion of film 12 from the light source 19, as indicated in Fig. 3, thus reserving that portion of film 12 for the sound record which is to be printed on the film.

In Fig. 3 there is shown at 12ª a length of the positive film 12 upon which pictures, fancifully indicated by dotted lines, but no portions of sound record, have been printed. Actually, of course, the picture positives would not be apparent before development of the film 12. By adjusting the shutter opening 15 the amount of light used in printing the negative pictures upon film 12 as positives can be regulated.

The picture positives having been printed on film 12, that film, preferably alone, travels downward over sprocket wheels 23 and 24, passing a slit or narrow aperture 17 in a mat 16. The sound negative 20 passes downward over sprocket wheels 21 and 22, sprocket 22 being driven from the gear 31 by means of a gear 34. In Fig. 2 a source of steady illumination is shown at 25, and an optical system is so arranged that an image of a narrow illuminated line on the negative sound film 20 at point 26 is obtained at point 30, for example by means of the lens 27, a narrow opening at point 28, a lens 29, and a cylindrical lens 29′. The function of lens 29′ will be pointed out hereinafter. At the point 30 the narrow line

image is photographed or printed upon a portion 12ª of the positive film 12. In Fig. 3 there is shown at 12ª a length of the positive film 12 upon which both the picture and the sound records have been printed, as fancifully indicated. The gears 31 and 34 preferably drive the sprocket wheel 22 at such speed that the sound negative 20 moves faster than the portion 12ª or 12ª of the film 12. The relative speeds should here be the same as the relative speeds used for the sound negative and the picture negative in making those records.

Both the sound record and the pictures having been printed on film 12, the film may be developed and the records fixed upon it.

As indicated above, the length of film 12 between apertures 15 and 17 should preferably be not greater than about four inches.

As pointed out above, one of the advantages of taking sound and picture records on separate negatives is that the sound film may, if desired, be run at greater speed than that customary for making picture films. The highest film speed possible in making the sound negative will depend upon the character of the films available. In general, it is necessary to employ a high speed film for this purpose in order to obtain sufficient exposure. With the type of high speed films at present available, it has been found desirable, particularly when recording sound involving frequencies of the order of several thousand cycles per second, to make the negative sound record at a film speed twice that commonly used in making the picture negative. As indicated above, this two to one ratio in the relative speeds of the negatives may be obtained, for example, by making proper adjustments in the speed of the motors driving the sound recorder and the camera, or by interposing the proper speed changing means between the motors and the negatives. As noted above, the same speed ratio which exists in the running of the sound and picture negatives while they are being made should preferably be maintained when the two negatives are driven for printing on the common positive. This may be done, for example, by making the size of the driving gear of the sprocket wheel 22 half as large as the gear on sprocket wheel 31, as shown in Fig. 2 and indicated in the description above.

One of the chief advantages of making the sound record on a negative running at twice the speed of the motion picture film results from the fact that a photographic emulsion of high sensitivity has inherently a coarse grain structure. For instance, the Eastman super-speed motion picture film has such a coarse granular structure that its resolution is only about half as great as that of the Eastman positive motion picture film. The upper limit of frequencies that may be recorded will, therefore, be twice as great for the positive as for the negative film for the same linear speed; or in other words, the same range of frequencies may be recorded on the positive at one half the speed of the negative.

For correct sound reproduction it is important that the development of the positive and negative be so carried out that the transmission of the positive is at every point proportional to the exposure of the negative. This is in general not the best condition for the pictures as under these circumstances they will usually be too harsh. In the system here proposed the picture negative and positive can be developed to give the most pleasing results for pictures, and yet the negative of the sound record can be so developed that when it is printed on the picture positive film, the required contrast is obtained in the positive sound record.

In order to get strict proportionality between illumination of the negative and transmission of the printed positive, in addition to proper development it is desirable that the exposure of both positive and negative shall always remain on the straight part of the characteristic curves of the photographic emulsions. Even with high power lenses and an intense source of steady illumination it has been found desirable to use a super-speed film for the sound negative in recording speech, for instance, in order to bring the illumination up to the point where the exposure falls on the straight portion of the characteristic curve. Now this ultra speed film has a coarse granular structure. The granular structure of the film tends to result in an accompanying noise in the reproduction, which is very similar to the scratch of the needle of the ordinary phonograph. A way of reducing this noise is to increase the width of the record; the effect of the individual grains on the light transmission during reproduction will then average out more nearly. The space available for a sound record on the picture film is, however, limited, so that a wide record is ordinarily not feasible. By the use of a printer such as is here described the effect of the grain size in the negative may be eliminated. A wide record may be made on the negative, the print of which on the positive may then be reduced by means of the optical system to the required width. The imprint on the positive of the individual grains in the negative will thereby be greatly reduced. If a cylindrical lens be interposed in the optical system, for instance as indicated at 29', no sharp image of the grains in the negative will be formed and they will not be reproduced on the positive, whereas, if a contact print were made the coarse grains of the negative would be reproduced on the positive. Since the speed of the positive affects only the speed at which prints

can be made, an emulsion of very fine granular structure can be used and scratching noise in the reproduction can thus be reduced to a minimum.

Due to variations in lighting conditions and in the character of the objects being photographed, motion picture negatives may vary greatly in density throughout the length of a single roll of film. It is customary to correct for this by varying the intensity of the light used for making positive records from the negatives. Sound records on negative films, on the other hand, may be produced under more easily controllable conditions, so that usually no such correction is required or desirable, or if required the correction will be different from that of the corresponding portion of the picture record. In accordance with this invention a separate lighting means is used for the picture and sound records, respectively, during the printing. With this arrangement the exposure of the positive motion picture record can be varied, as for instance by varying the width of the opening 15 in the manner common in the art, or varying the intensity of the light 19 by any known or suitable means (not shown), without correspondingly varying the exposure of the sound record, and if desired the exposure of the sound record can be independently varied. It is of course possible to simultaneously vary the width of the opening 15 and the intensity of the light from source 19, to vary the exposure of the films 13 and 12 to the light from source 19.

The optical system diagrammed in Fig. 2 is a practical one; but the results attained thereby can be achieved in various ways. Similarly, although Figs. 2 and 3 show one practical arrangement for printing the negative pictures on the positive film, it is to be understood that other means, for instance a standard step-by-step printer, might be employed, part of the positive film being masked, however, as in the arrangement shown in Figs. 2 and 3, to leave sufficient space for the sound record. In fact, the principles of the invention claimed may be embodied in many organizations differing from those specifically illustrated and described.

What is claimed is:

1. A process of forming sound and motion pisture records which consists of forming a photographic negative record of a changing scene, forming a photographic negative record of the sound accompanying the scene, with the sound negative running at a speed of the order of twice that of the picture negative, and simultaneously printing said records on a single positive film with the sound negative running at a speed of the order of twice that of the picture negative.

2. The method of producing a combined sound and moving picture record on the same film, which consists in forming a photographic negative of the changing scene, forming a photographic negative record of the sound accompanying the scene with the sound record running at a greater speed than the picture negative, and simultaneously printing the two records on a single positive film while maintaining the same relative speeds of the two negatives as in recording.

3. The method of producing a combined sound and moving picture record on the same film, which consists in forming a photographic negative of the changing scene, forming a photographic negative record of the sound accompanying the scene on a high speed negative film run at about double the speed of the negative of the changing scene and simultaneously printing the two negative records on different portions of a positive film while running the two negatives at the same relative speed as in recording.

4. The method of producing a synchronized sound and moving picture record on the same film, which consists in forming a photographic negative of the changing scene, simultaneously forming a photographic negative of the sound accompanying the scene on a negative film run at approximately double the speed of the picture negative and simultaneously printing the two negatives on a positive film, the picture by contact and the sound through an optical system while maintaining the same relative speed of the negative as in recording.

In witness whereof, I hereunto subscribe my name this 1st day of April, A. D. 1924.

EDWARD C. WENTE.

L. J. R. HOLST.

PHOTOGRAPHIC PRINTING MACHINE.

APPLICATION FILED OCT. 23, 1914.

1,205,632.

Patented Nov. 21, 1916.

4 SHEETS—SHEET 1.

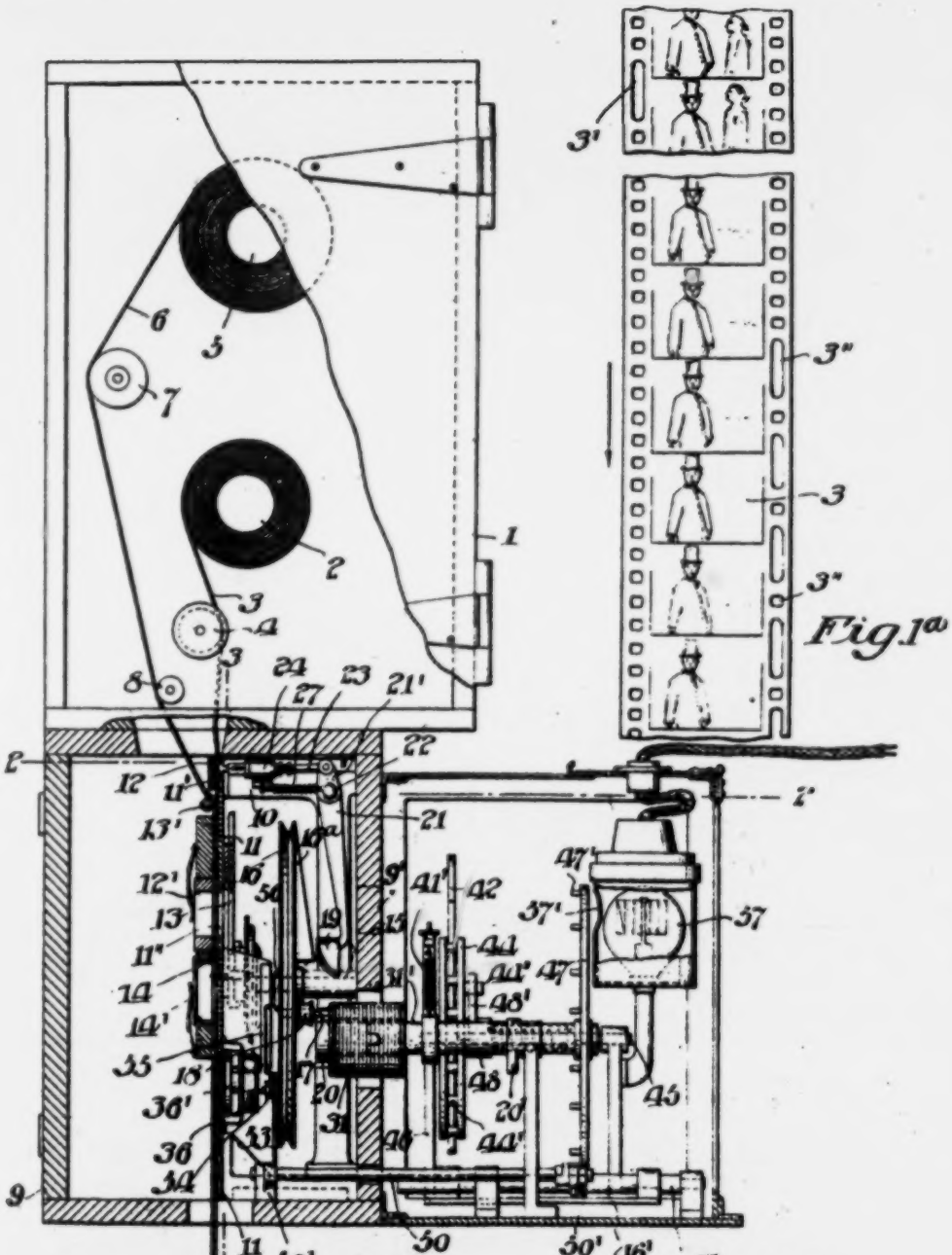

Fig. 1.

Fig. 1a

WITNESSES:

INVENTOR:

Lodewyk J. R. Holst.

ATTORNEY.

646

L. J. R. HOLST.

PHOTOGRAPHIC PRINTING MACHINE.

APPLICATION FILED OCT. 23, 1914.

1,205,632.

Patented Nov. 21, 1916.

4 SHEETS—SHEET 2.

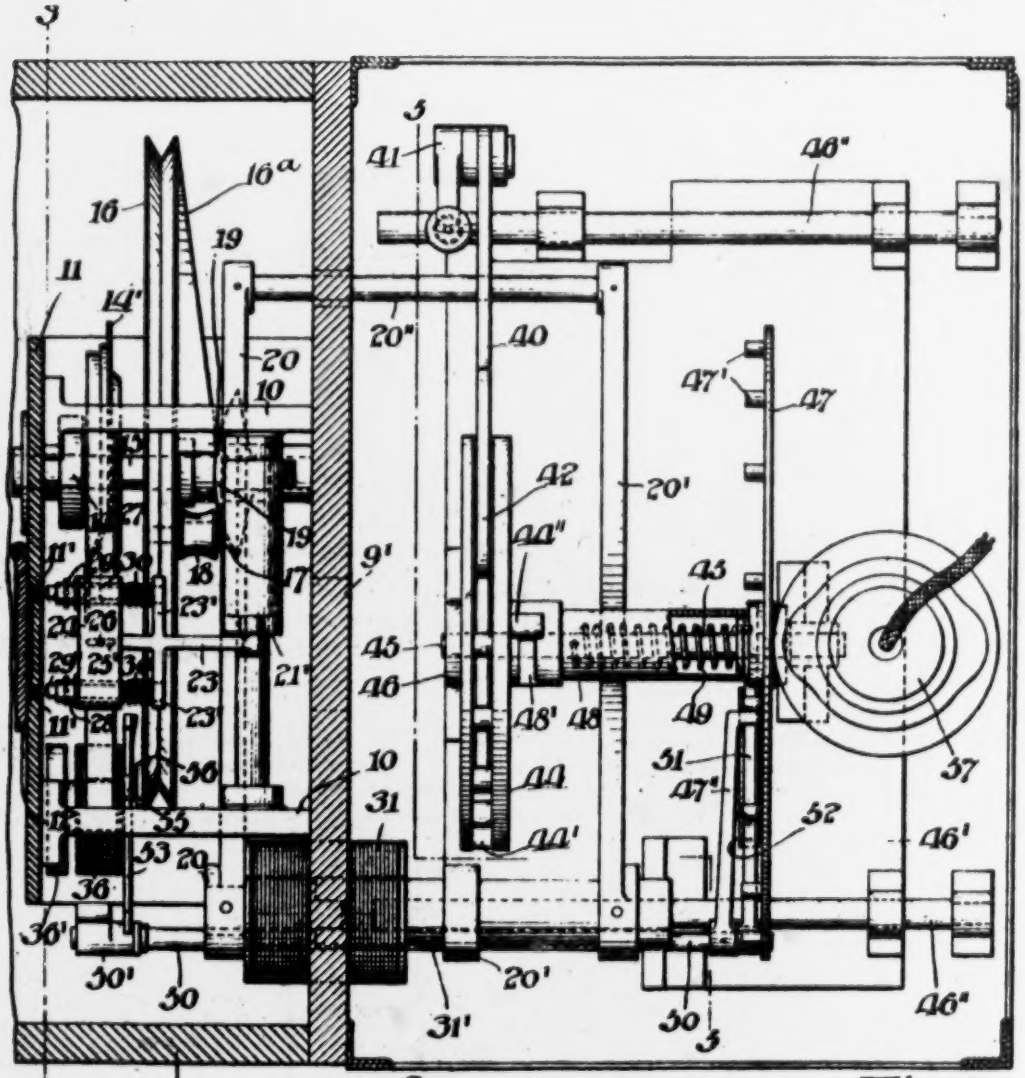

Fig. 2.

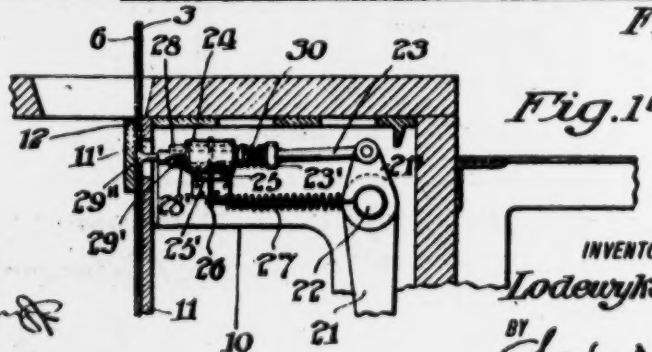

Fig. 1a

WITNESSES:

INVENTOR:

Lodewyk J. R. Holst

BY Charles A. Bellis

ATTORNEY.

L. J. R. HOLST.

PHOTOGRAPHIC PRINTING MACHINE.

APPLICATION FILED OCT. 23, 1914.

1,205,632.

Patented Nov. 21, 1916.

4 SHEETS-SHEET 1.

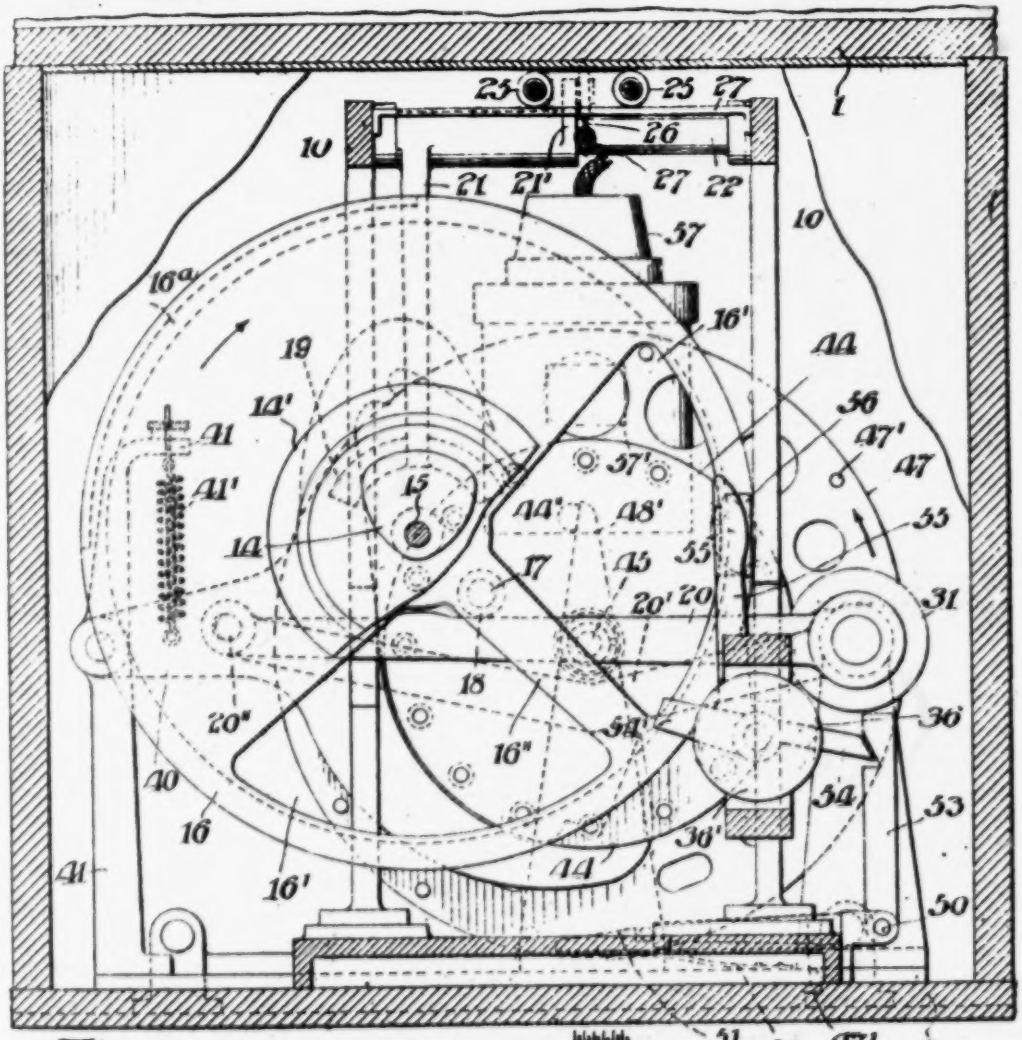

Fig. 3.

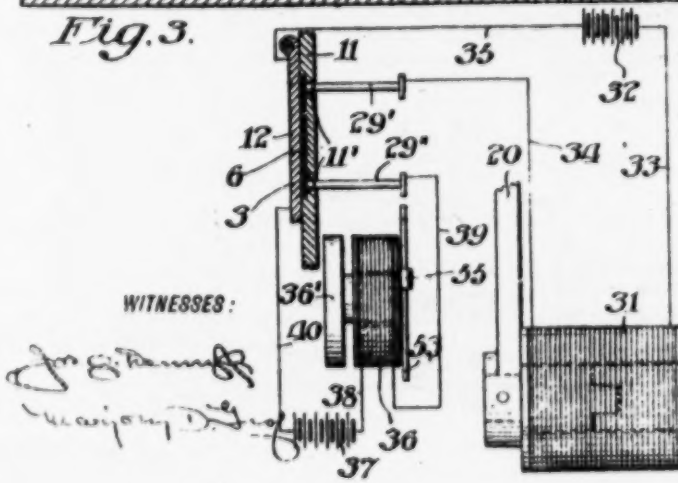

Fig. 4.

WITNESSES:

INVENTOR:
Lodewyk J. R. Holst,
BY
Charles A. Butler
ATTORNEY.

L. J. R. HOLST.

PHOTOGRAPHIC PRINTING MACHINE.

APPLICATION FILED OCT. 23, 1914.

1,205,632.

Patented Nov. 21, 1916.

4 SHEETS—SHEET 4.

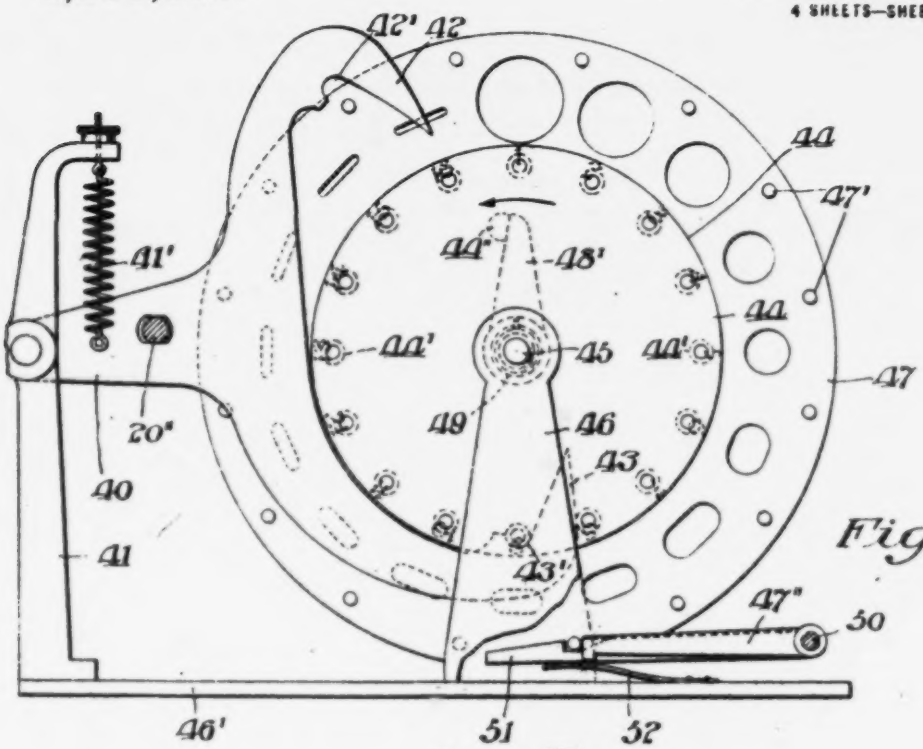

Fig. 5

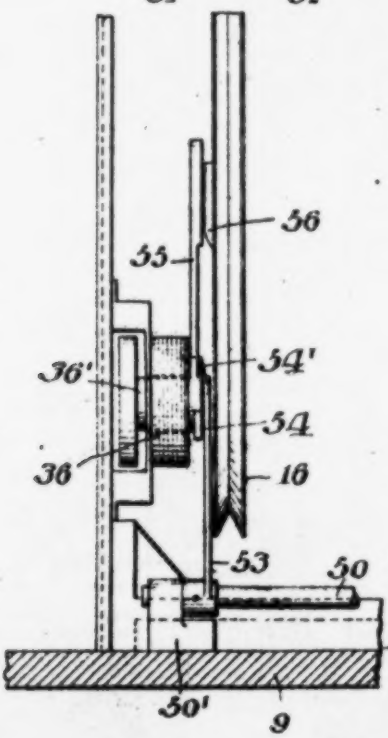

Fig. 6.

WITNESSES:

INVENTOR:
Lodewyk J. R. Holst,
BY Charles N. Butler
ATTORNEY.

UNITED STATES PATENT OFFICE.

LODEWYK J. R. HOLST, OF PHILADELPHIA, PENNSYLVANIA, ASSIGNOR TO LUBIN FILM COMPANY, OF PHILADELPHIA, PENNSYLVANIA, A CORPORATION OF PENNSYLVANIA.

PHOTOGRAPHIC-PRINTING MACHINE.

1,205,632. Specification of Letters Patent. Patented Nov. 21, 1916.

Application filed October 23, 1914. Serial No. 868,185.

To all whom it may concern:

Be it known that I, LODEWYK J. R. HOLST, a citizen of the United States, residing in the city of Philadelphia, county of Philadelphia, and State of Pennsylvania, have invented certain Improvements in Photographic-Printing Machines, of which the following is a specification.

My invention is designed primarily for use in printing motion pictures, and its leading purpose is to obviate the necessity for printing separately and then joining together the several scenes which together form a picture story, but it will be evident that the invention is adapted for more general use.

Where several negatives are made separately under varying conditions of light and exposure, as is requisite in most instances in producing motion pictures, it has been necessary, in order to obtain satisfactory positive prints from such negatives, to make such prints separately so that the intensity of the light can be regulated in accordance with the density of the several negatives, the requisite printing light intensity being determined usually by test exposures as a guide in making the several positive prints separately.

The improvements of my invention contemplate, in the preferred form, joining the several negatives or negative sections together in proper relation, in accordance with test exposures, and providing such sections with special perforations, by means of which, in the operation of printing, an electric circuit or circuits are closed and mechanism operated thereby to automatically regulate the intensity of the light to that desired or in accordance with the density of the negative section to be printed.

The invention, as illustrated in the accompanying drawings, is adapted to a particular type of machine, but it will be understood that the design of the machine may be changed within the scope of the invention.

In the drawings, Figure 1 is a sectional elevation of the machine embodying my improvements; Fig. 1ª is a section of a motion picture film perforated or slotted for use therein; Fig. 1ᵇ is an enlarged sectional view of details of construction shown in Fig. 1; Fig. 2 is an enlarged sectional view taken on the line 2—2 of Fig. 1; Fig. 3 is an enlarged sectional view taken on the line 3—3 of Figs. 1 and 2 with the partition between the lamp and printing housings broken away; Fig. 4 is a sectional elevation of diagrammatical character illustrative of electrical mechanism comprised in the improvements; Fig. 5 is a broken sectional view taken on the line 5—5 of Fig. 2; and Fig. 6 is a broken sectional elevation of detached details of construction.

The machine, as illustrated in the drawings, comprises the case 1 containing the reel 2 from which the sectional negative film 3 is drawn over the roller 4, and the reel 5 from which the film 6 is drawn over the rollers 7 and 8.

The case 9, on which the case 1 is supported, contains the frame 10, which supports the plate 11 provided with the apertures 11′ and 11″ together with the doors 12 and 12′ adapted to close thereover. The doors 12 and 12′ coöperate with the plate 11 in guiding the negative film 3 across the apertures 11′ and 11″ as the film is drawn through the machine by the usual feeding device 13 operated by the cams 14 and 14′ fixed on the journaled shaft 15. The film 6 upon which the positive images are to be exposed through the negative film 3 is guided over the rollers 7, 8, and 13′ and makes contact with the negative film after having passed this latter roller. The positive film 6 is fed through the machine simultaneously with the negative 3 and by the same propelling mechanism.

A belt driven shutter wheel 16, which is fixed on and drives the shaft 15, contains the equal apertures 16′ separated by the spoke 16″. This wheel, a half or more of which is closed, is coördinated with the cam 14 so that when the end of the downward movement of the film by the cam has been effected the shutter wheel moves from a position covering the aperture 11″ to one uncovering

the same. The wheel 16 is provided with a pin 17 carrying a roller 18 and with a cam 16a. The pin is adapted to engage for about 90 degrees of its movement and during the period of exposure a cam 19, and the roller 18 is adapted to engage a bar 20 which is movable into the path thereof by mechanism hereinafter described and removable from said path by the cam 16a.

The cam 19 is fixed on the arm 21 which is connected with an arm 21', these arms being fulcrumed on the shaft 22. A bar 23, having the transversely projecting arms 23', connects the arm 21' with a block 24 which is movable on the supporting plate 25 attached to the frame 10, the block being provided with a pin 26 movable in the slot 25' in the plate 25 and connected by a spring 27 with the shaft 22. Insulating bearings 28 are carried in the ends of the block 25 and bolts 29' and 29'', having their forward ends in the apertures 11', are adapted to reciprocate in the block, the bearings being provided with the slots 28' and the bolts with the pins 29' movable therein. Springs 30 are disposed between the arms 23' and the heads of the bolts 29' and 29'', to move the latter forward and permit them to move backward within the bearings 28, and the spring 27 acts to hold the cam 19 in the path of the pin 17. The cam 14, causes the film strips to move downwardly in an intermittent manner, and is so placed with respect to the opening in the shutter wheel 16 that when the opening uncovers the printing aperture 11'' the film strips are at rest. During this period, the forward ends of the pins 29' and 29'' will rest against the negative film 3 if it presents its normal perforations, whereas either of these pins will pass through the film and rest against the metal door 12 in case the negative presents one of its special elongated perforations 3' or 3'' before them. The action of the spring 27 withdraws both these pins from contact with the film or with the door 12 before the film feeding mechanism operates to bring the succeeding picture before the printing aperture.

A solenoid 31 and any source of electric energy 32 are connected by the conductor 33, the solenoid being connected with the bolt 29' by a conductor 34 and the battery 32 being connected with the door 12 by a conductor 35. This circuit is automatically closed when slots 3'' of the negative film register with the bolt 29' so that the latter can make contact with the door 12.

A solenoid 36 and any source of electric energy 37 are connected by a conductor 38, the solenoid being connected with the bolt 29'' by the conductor 39 and the source of electric energy being connected with the door 12 by the conductor 40. This circuit is automatically closed when registering slots 3' of the films, during printing periods or periods of rest, register with the bolt 29'' and the latter engages the door 12.

The bar 20 and the downwardly bent lever 20', fixed together by the rod 20'', are fixed to the anchor 31' of the solenoid 31 which, when excited, moves these parts toward the wheel 16 and carries the bar 20 into the plane of the roller 18, the roller acting to depress the rod.

An escapement lever 40 is fulcrumed on the standard 41 and engaged by the rod 20'' which moves therethrough, and connected with a spring 41' which is anchored to the standard so as to tend to hold the lever elevated and elevate it when depressed by the rod. The lever is provided with the pallets 42 and 43 having the respective notches 42' and 43' at their bases, in the form of a usual escapement. A lantern wheel 44, provided with the trundles 44' adapted to be engaged by the pallets 42 and 43 and by the notches 42' and 43', is fixed on an arbor 45 journaled in the bearings or standards 46 on a carriage 46', the latter being movable on the ways 46'' and the wheel being intermittently advanced and locked by the reciprocation of the escapement lever 40.

A light disk 47, provided with graduated apertures numbered from 1 to 16 inclusive and corresponding in number with the trundles of the lantern wheel and with the pins 47' respectively disposed between adjacent apertures, has fixed thereto a sleeve 48 mounted concentrically in the arbor 45. The sleeve 48 is provided with an arm 48' adapted to engage a pin 44'' on the wheel 44. A spring 49 has one end fixed to the arbor 45 and the other to the sleeve 48, permitting a limited movement of the wheel 44 relative to the disk 47. When the arm 40 is depressed so that the tooth 42 engages and moves a roller 44' into the notch 42', tension is applied to the spring 49, which in turn applies force to the disk 47 tending to turn it in the direction of the arrow. The disk is normally held against the action of this spring by the engagement of a pin 47' thereon with a dog 47'' fixed on a shaft 50, which is journaled in the bearings 50'. A catch 51 is loosely mounted on the shaft 50 and supported by a spring 52 to cause it to engage any one of the pins 47', which makes contact with the dog and prevents backward movement of the light disk 47. When the locking dog 47'' is elevated to disengage the wheel 47, the latter, when subject to force communicated through the spring 49 under tension due to advancing the wheel 44, will be thrown forward until the arm 48' engages the pin 44''.

The shaft 50 has fixed on the opposite end

thereof an arm 53 (Figs. 3 and 6) adapted to be engaged and rocked by an arm 54 on the anchor or armature 36′ of the solenoid 36, the anchor also having fixed thereon an arm 55 which lies in the path of the cam or knocker 56 on the wheel 16 when the solenoid is excited. The knocker is arranged to engage the arm 55, at the end of an exposure, for the purpose of causing the arm 54 to act through the arm 53 and shaft 50 to elevate the door 47″, whereupon the spring 49 causes the disk 47 to be thrown forward to bring a succeeding light aperture (of area corresponding to the density of the next film section) into position during the period that the shutter obturates the exposure aperture 11″, the disk 47 being stopped by the engagement of the arm 48′ with the pin 44″ and locked in this position by the dog 51. When this has been effected, the circuit containing the electro-magnet 36 is broken and the armature 36′ is moved back by the engagement of the cam 56 with the arm 54′, thereby permitting the dog 47″ to again lock a pin 48″ of the wheel 47.

The lamp 57 is preferably of the glowing filament type and the light therefrom is projected through the aperture 57″ thereof, the aperture of the light disk 47 registering therewith, the aperture 9′ between the printing and lamp cases, an aperture 16′, of the disk 16, and the aperture 11″ of the plate 11 upon the films.

The apertures 1 to 16 of the light disk vary in area preferably so that from the smallest to the largest the succeeding apertures are 1.2 times as high as the preceding ones; those that are more than ½″ in height are preferably made circular and those of less height are preferably made ½″ in width. These apertures of varying area are designed to pass the amount of light required for the different densities of the various negative film sections.

In order to compensate for variations in the power of the light, which can be found by test, the carriage 46′, with the mechanism thereon, is moved along the ways 46″ so that the distance of the lamp from the film may be varied as required to produce the established standard intensity of the light.

The mechanism having been adjusted and the test prints of the negative sections having been obtained, these sections are joined together, with a leader attached to the first section. This leader and the successive film sections are then provided with the slots or elongated perforations 3′ and 3″ required to operate the light disk 47. If, for instance, the first section should require that the light be passed through aperture No. 6, five elongated holes are formed on the left side of the leader and one hole is formed on the right side of the first film section at a distance above the first image thereof equal to the length of the images between the apertures 11′ and 11″ less one. These slots or perforations, in the leader, by causing the circuit to be closed through the solenoid 31, cause the bar 20 to be drawn under the roller 18 and thereby to depress the arm 40, which is followed by the breaking of the circuit before the next forward movement of the films and the shifting of the bar 20 by the cam 16ª for each of the five perforations through which the circuit of the electro-magnet 31 is closed. Thus the wheel 44 is moved five steps forward. The slot on the right in the first negative section effects the release of the light disk during the period that the first picture of the first section moves into position registering with the opening 11″ in the plate 11 by closing the circuit through the solenoid 38. If thus the light disk has previously been placed at opening 1, it has been shifted by the described operations to opening 6 when the first picture of the first scene was exposed.

Assuming that the second section has a density requiring opening number 13 to be used, the wheel 42 will be turned by means of slots in the left side of any part of scene one whereas the single hole 3′ in the correct position on the right of section two releases the disk 47 in time to print the first image of scene two through opening 13.

It is to be understood that the number of holes required on the left side of each section, in order to bring the proper light aperture of the disk into position for the next section, is found by subtracting the number of the aperture in operative position from the number of the next one to be placed in position. If the latter number be lower than the first one, the number 16 is first to be added to the same and the subtraction made from the sum so obtained. That is to say, if the active aperture be number 6 and the next one to be used is number 4, add 16 to 4 and subtract 6, which indicates that fourteen holes must be turned in order to bring aperture 4 into operative position after aperture 6 has occupied such position. Furthermore, it will be understood that it is quite immaterial in which part of a preceding section the left hand holes for the advance of the wheel 44 are located, inasmuch as the light disk 47 will only follow the advance of the wheel 44 when liberated at the proper moment by the elongated hole in the right hand side of the succeeding section.

Having described my invention, I claim:

1. In a photographic printing machine, means for feeding a film, adjustable mechanism for regulating the light passing

652

therethrough to said film, and automatic means for variably adjusting said mechanism proportionately to the density of the film.

2. In a photographic printing machine, means for feeding a film, a movable device for regulating the light passing to said film, and means for automatically moving said device variable predetermined distances proportionately to irregular differences of density between successive sections of said film.

3. In a photographic printing machine, the combination of revoluble shutter mechanism, a source of light, a device having apertures adapted for regulating the amount of light passed from said source of light through said shutter mechanism, and means comprising an electric circuit whereby said device is operated to change the aperture disposed between said source of light and shutter when the latter cuts off the light from said film.

4. In a photographic printing machine, revoluble shutter mechanism, a lamp, an apertured device revoluble between said lamp and shutter mechanism, means whereby said shutter mechanism turns said apertured device and changes the aperture through which light is passed, and electromagnetic mechanism whereby said means last named are brought into operative relation.

5. In a photographic printing machine, a shutter wheel, a lamp, a revoluble apertured device for passing light from said lamp through said shutter wheel, and means for operating said device by said shutter wheel, said means comprising a film, means for feeding said film across the path of light from said lamp through said apertured device and through said shutter wheel, and an electric circuit controlled by said film.

6. In a photographic printing machine, revoluble shutter mechanism, a lamp, a revoluble device having graduated light apertures adapted to be selectively disposed between said lamp and shutter mechanism, and means for operating said device, said means comprising a circuit and a photographic film for controlling said circuit whereby said apertured device is adjusted to pass a predetermined amount of light.

7. In a photographic printing machine, the combination with a film, of means for feeding said film, a device having a plurality of light passages for regulating the light passing to said film, and automatic means controlled by said film for selectively positioning non-consecutive passages aforesaid to pass light to said film.

8. In a photographic printing machine, the combination with a film comprising sections having different densities and perforations of varying character corresponding to said different densities, of film guiding means, mechanism for feeding said film, a lamp for projecting light on said film, a revoluble device containing apertures of different areas movable between said lamp and film, and means comprising an electric circuit normally held open by said film and adapted to be closed through said perforations, whereby said device is automatically operated by the corresponding character of said perforations to set apertures thereof adapted for passing the amount of light required for printing said film sections.

9. In a photographic printing machine, means for feeding a film, means for guiding said film, a lamp, a shutter wheel adapted for periodically interrupting light projected from said lamp upon a film carried by said guiding means, a revoluble device containing apertures of different areas movable across said lamp so as to regulate the amount of light projected thereby on said film, means for turning said device, a device carried by said shutter wheel for operating said means last named, and electro-magnetic mechanism adapted to be controlled by said film for controlling the relation between said last named means and the device of said shutter wheel for operating the same.

10. In a photographic printing machine, the combination with a film having sections of different densities and perforations corresponding to said densities, of film guiding means, means for feeding said film through said guiding means, an electric circuit adapted to be automatically closed through perforations aforesaid, a lamp, a revoluble device containing apertures adapted for regulating the amount of light passing from said lamp to said film, means for giving a step by step motion to said device for the purpose of changing the apertures thereof to pass the light required for printing, a revoluble device normally out of engagement with said means, and mechanism controlled by said circuit whereby said means last named is moved into position to be operated upon by said device last named.

11. In a photographic printing machine, a lamp, a revoluble device containing apertures of graduated sizes movable across said lamp, mechanism whereby said device is adapted to be turned to shift the apertures thereof, mechanism adapted for locking said device in various positions to be occupied thereby, means comprising a circuit containing an electro-magnet whereby said mechanism first named is shifted, a revoluble wheel having a device adapted for operating said mechanism first named in one position thereof, and mechanism comprising an electro-magnet for unlocking said device synchronously with the operation of said mechanism first named.

12. In a photographic printing machine, a film having sections of different densities, means for intermittently feeding said film, a shutter adapted for cutting off light from said film during the movements thereof, a circuit having devices separated by said film to open it and connected through said film to close it, a rocking mechanism, a device on said shutter for operating said mechanism, means comprising an electro-magnet in said circuit for moving said mechanism into and out of position to be operated by said device, a wheel operated by said mechanism, a light disk having graduated apertures, means whereby said wheel turns said disk, holding means for said disk, a second circuit having devices separated by said film to open it and connected through said film to close it, and means comprising an electro-magnet in said last circuit for releasing said holding means.

13. In a photographic printing machine, a film having sections of different densities and perforations corresponding thereto, means for feeding said film, a shutter adapted for cutting off light from said film, a circuit having devices separated by said film to open it and connected through said film to close it, a ratchet mechanism, a device on said shutter for operating said ratchet mechanism, means comprising an electro-magnet in said circuit and a cam on said shutter whereby said ratchet mechanism is brought into and moved out of operative relation with said device, means comprising a revoluble device containing graduated apertures operated by said ratchet mechanism, and a lamp for projecting light on said film through said apertures.

14. In a photographic printing machine, a film having sections of different densities and means for feeding said film, circuits controlled by said film, a lamp, a revoluble device having graduated apertures for passing predetermined amounts of light from said lamp to said film, and means comprising one of said circuits whereby said device is operated to permit the passage of light to said film corresponding to the densities of said sections and means comprising another of said circuits for controlling said operating means.

15. In a photographic printing machine, a film having sections of different densities, means for feeding said film, a circuit controlled by said film, a lamp, a device for passing predetermined amounts of light from said lamp to said film, and means comprising an adjustable stop controlled by said circuit whereby said device is adjusted for passing light to said film corresponding to the densities of its said sections.

16. In a photographic printing machine, a film having sections of different densities, means for feeding said film, circuits controlled by said film, a lamp, a device for passing predetermined amounts of light from said lamp to said film, and means controlled by said circuits whereby said device is adjusted for passing light to said film corresponding to the densities of said sections, said last named means comprising solenoids controlled by said circuits and mechanisms under control of said solenoids whereby said device is adapted to be alternately locked and operated.

17. In a photographic printing machine, a lamp, a revoluble disk containing graduated apertures for passing light from said lamp, locking means for holding said disk, a ratchet mechanism, flexible mechanism through which said ratchet mechanism is adapted to turn said disk, a film, means for feeding said film, a revoluble shutter, and means whereby said film releases said locking mechanism, said means comprising a rock arm, and means comprising a device on said shutter for rocking said arm.

18. In a photographic printing machine, a lamp, a revoluble disk containing graduated apertures for passing light from said lamp, disk operating mechanism comprising a spring adapted to be put under tension, locking mechanism for holding said disk, a film, means for feeding said film, a shutter revoluble between said disk and film, and means whereby said film and shutter operate said operating and locking mechanisms.

19. In a photographic printing machine, a lamp, a revoluble disk containing graduated apertures for passing light from said lamp, disk operating mechanism comprising a spring adapted to be put under tension, locking mechanism comprising a dog for holding said disk, a film, means for feeding said film, a shutter revoluble between said disk and film, an electric circuit controlled by said film, an electro-magnet in said circuit, means controlled by said electro-magnet for operating said locking mechanism, and a device carried by said shutter for operating said means last named.

20. In a photographic printing machine, a lamp, a revoluble disk containing graduated apertures for passing light from said lamp, disk operating mechanism, locking mechanism for said disk, a film, means for feeding said film, an electric circuit controlled by said film, an electro-magnet in said circuit, an armature for said electro-magnet and a lever thereon, said lever being movable by said armature into and out of engagement with said locking mechanism, and a revoluble device for operating said lever when in engagement with said locking mechanism.

21. In a photographic printing machine, film feeding mechanism, a device for regulating the light passing to said film, means comprising a circuit containing a contact for

actuating said device, and means for moving said contact toward and from the path of said film.

22. In a photographic printing machine, means for feeding a film, a device for regulating the light passing to said film, mechanism for operating said device, means for holding said device against the action of said mechanism, and means controlled by said film for releasing said device.

23. In a photographic printing machine, a light regulator, mechanism for operating said light regulator, driving means, means for moving said mechanism into the path of said driving means, and a device connected with said driving means for moving said mechanism from the path of said driving means.

In testimony whereof I have hereunto set my name this 17th day of October, 1914, in the presence of the subscribing witnesses.

LODEWYK J. R. HOLST.

Witnesses:
JOS. G. DENNY, Jr.,
C. N. BUTLER.

655

J. TESSIER.

MOTION PICTURE PRINTING MACHINE.

APPLICATION FILED AUG. 21, 1914.

1,205,582.

Patented Nov. 21, 1916.

4 SHEETS—SHEET 1

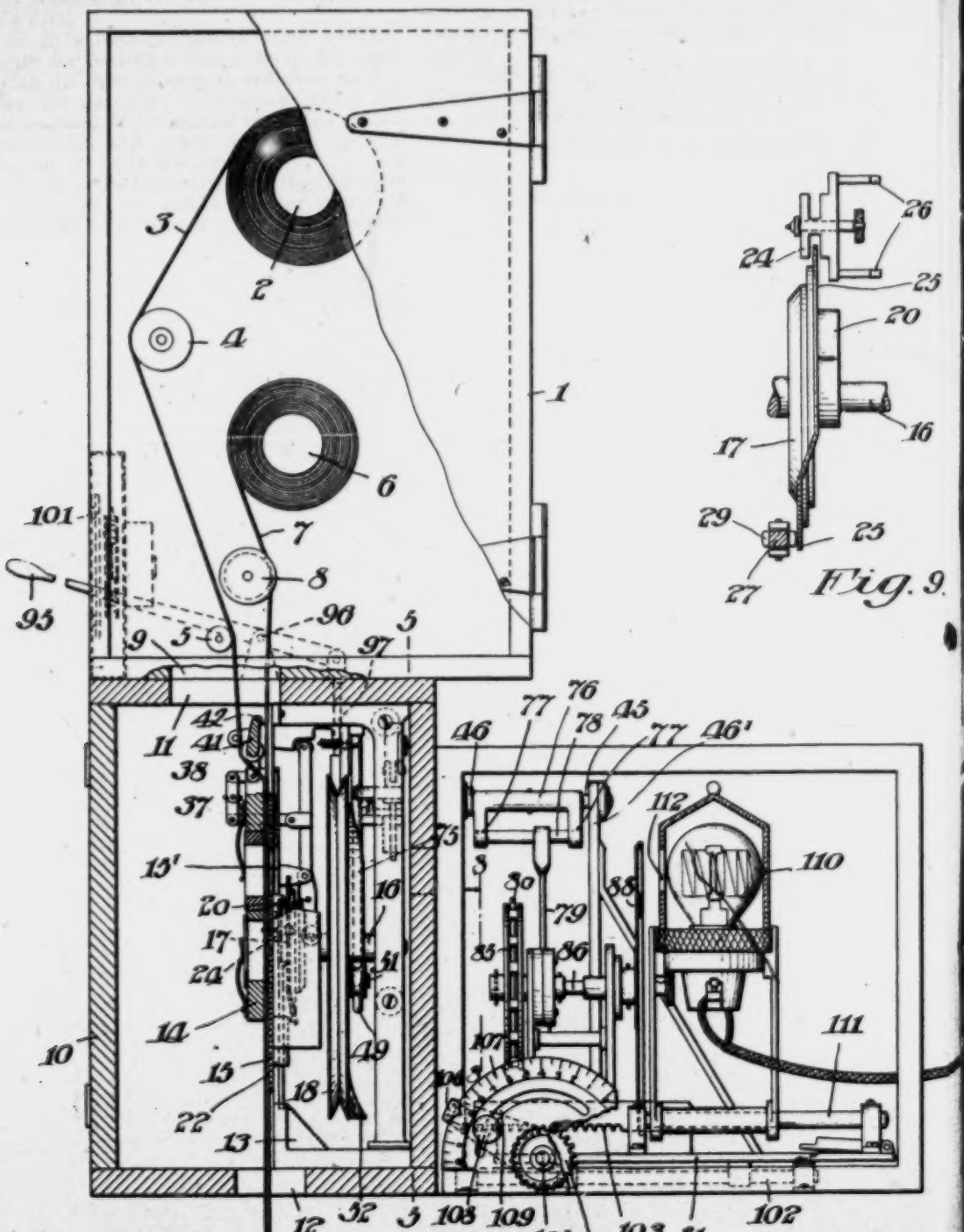

Fig. 1.

Fig. 9.

WITNESSES:

R. Schleicher.

Jos. B. Dennis Jr.

INVENTOR:

Julien Tessier

BY Charles N. Burch

ATTORNEY.

656

J. TESSIER.

MOTION PICTURE PRINTING MACHINE.

APPLICATION FILED AUG. 21, 1914.

1,205,582.

Patented Nov. 21, 9

4 SHEETS—SHEET.

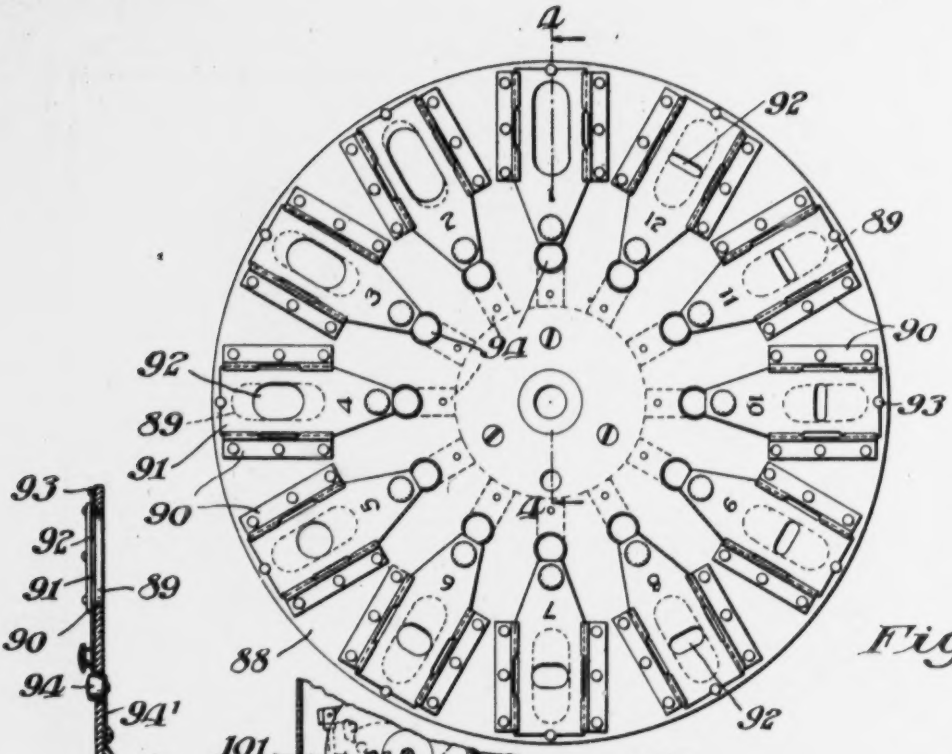

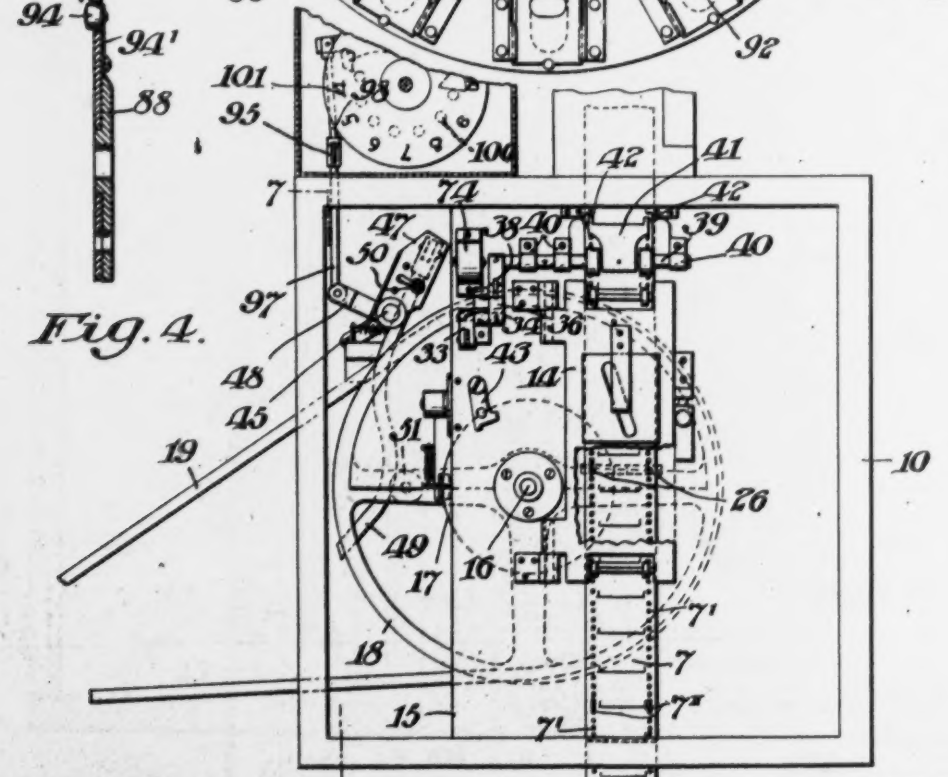

WITNESSES:

R. Schleicher

INVENTOR:

Julien Tes

BY

Charles N. Bu

ATTORNEY

657

J. TESSIER.

MOTION PICTURE PRINTING MACHINE.

APPLICATION FILED AUG. 21, 1914.

1,205,582.

Patented Nov. 21, 19

4 SHEETS—SHEET 3.

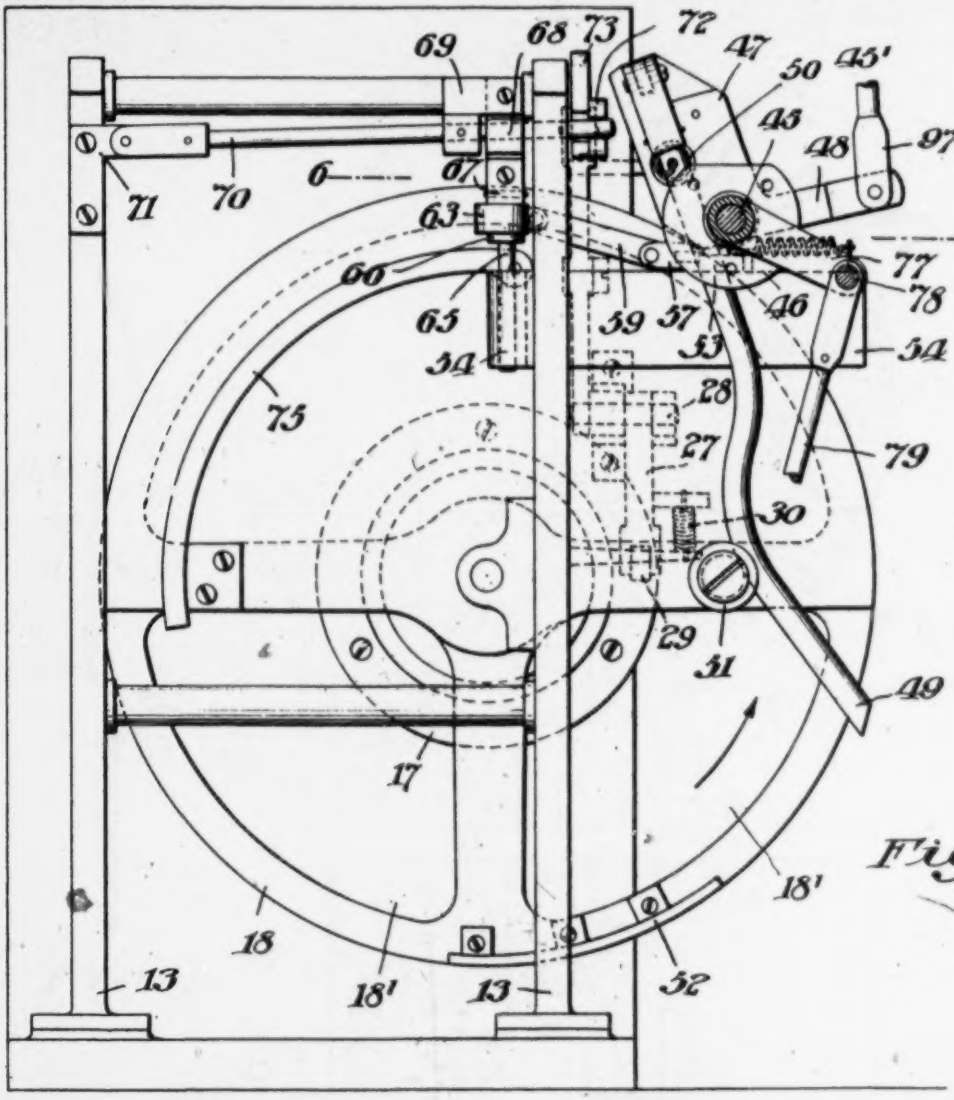

Fig. 5.

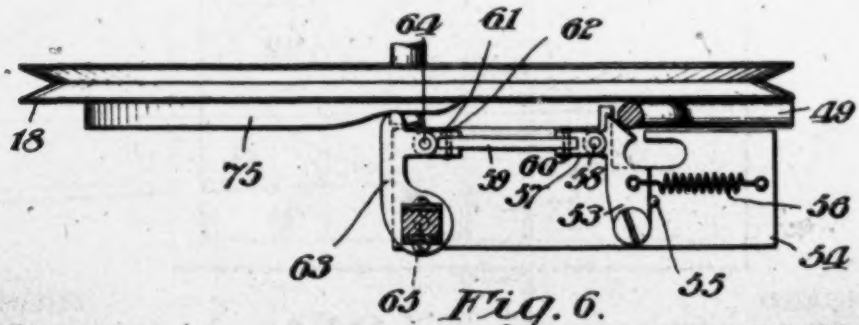

Fig. 6.

WITNESSES:

R. Schleicher

INVENTOR:

Julien Tessi

BY

Charles N. Bull

J. TESSIER.

MOTION PICTURE PRINTING MACHINE.

APPLICATION FILED AUG. 21, 1914.

1,205,582.

Patented Nov. 21, 1

4 SHEETS—SHEET

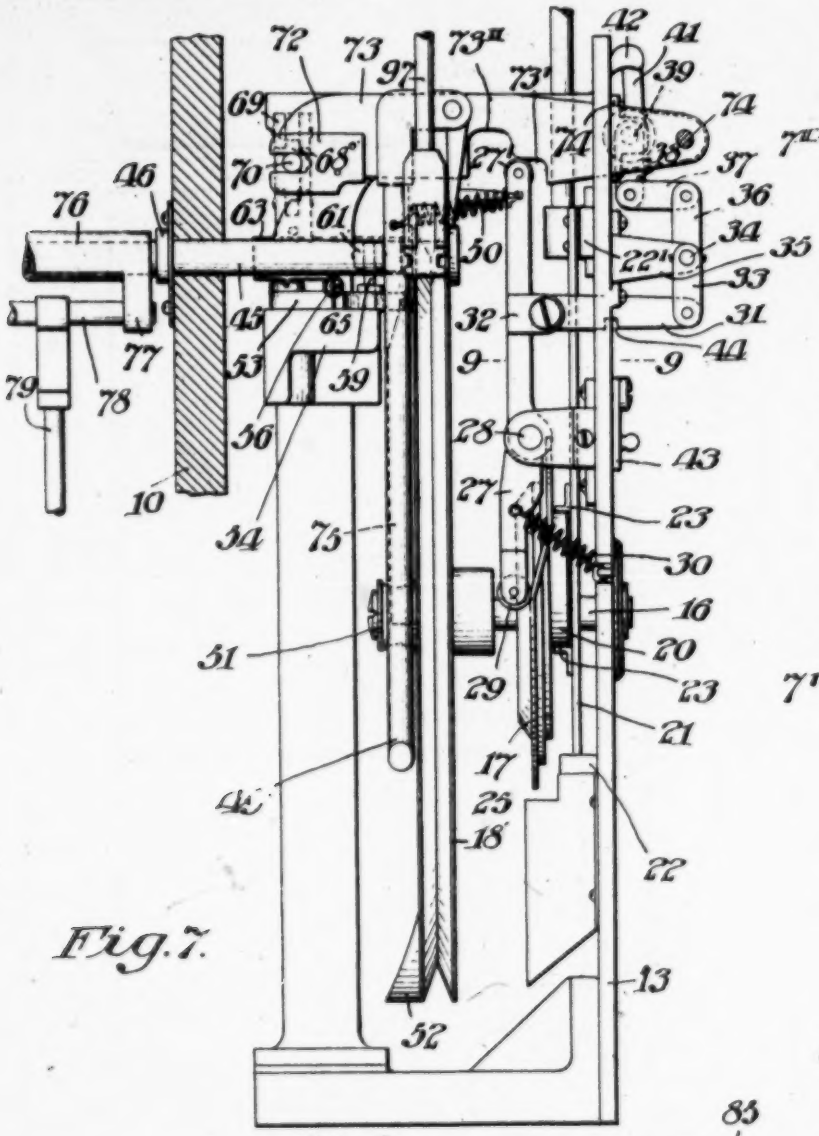

Fig. 7.

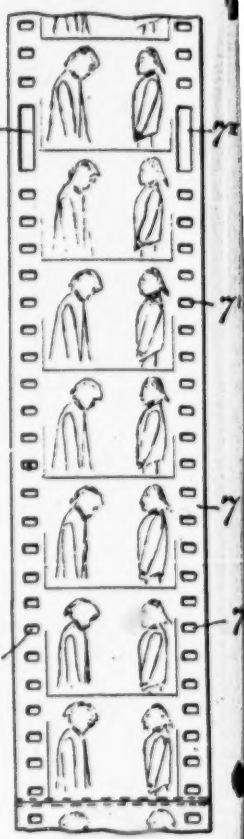

Fig. 10.

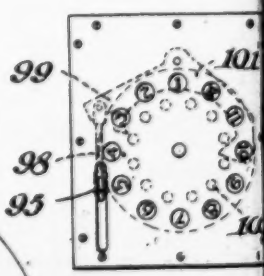

Fig. 11.

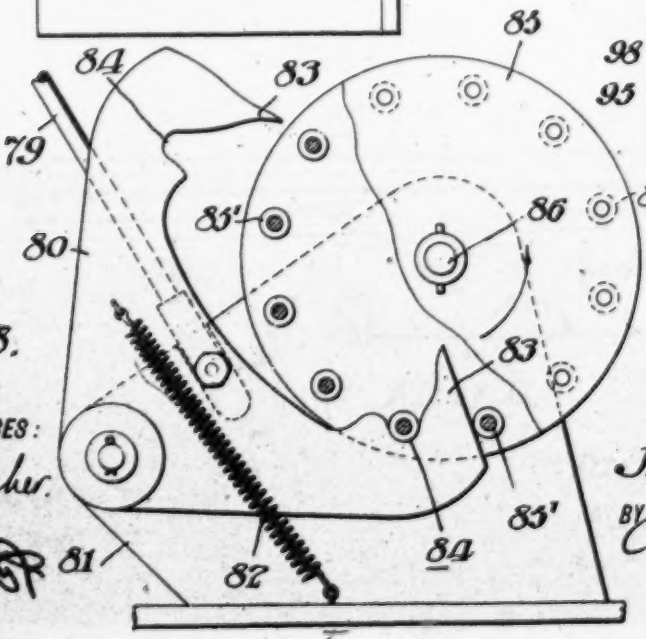

Fig. 8.

WITNESSES:

R. Schleicher.

INVENTOR:

Julien Tes

BY

ATTORNEY.

UNITED STATES PATENT OFFICE.

JULIEN TESSIER, OF PHILADELPHIA, PENNSYLVANIA, ASSIGNOR TO LUBIN FILM COMPANY, OF PHILADELPHIA, PENNSYLVANIA, A CORPORATION OF PENNSYLVANIA.

MOTION-PICTURE-PRINTING MACHINE.

1,205,582. Specification of Letters Patent. Patented Nov. 21, 1916.

Application filed August 21, 1914. Serial No. 857,830.

To all whom it may concern:

Be it known that I, JULIEN TESSIER, a citizen of France, residing in the city of Philadelphia, county of Philadelphia, and State of Pennsylvania, have invented certain Improvements in Motion-Picture-Printing Machines, of which the following is a specification.

In motion picture photography, different parts of the same subject are very commonly photographed at different times or under different conditions, so that different sections of the negative film are subjected to different exposures and have different densities which must be corrected or compensated for in printing the positives from the negatives in order to have uniformity in the projected pictures.

It is the leading object of my invention to provide a printing machine which is adapted to be adjusted initially and to be automatically operated so that the light used in printing will be proportioned to the density of the film section and the positive produced will be uniform in character, to the end that printing may be effected with improved results and without the loss of time that has heretofore obtained.

In the accompanying drawings, Figure 1 is a sectional elevation of a printing machine embodying my invention; Fig. 2 is a part sectional front elevation of the same with parts broken away and the front of the cases removed; Fig. 3 is an elevation of the revoluble light disk provided with slides for regulating the amount of light passed for use in printing; Fig. 4 is a broken sectional view taken on the line 4—4 of Fig. 3; Fig. 5 is an enlarged view taken on the line 5—5 of Fig. 1; Fig. 6 is a view of details partly in section taken on the line 6—6 of Fig. 5; Fig. 7 is an enlarged sectional view taken on the line 7—7 of Fig. 2; Fig. 8 is an enlarged sectional view taken on the line 8—8 of Fig. 1; Fig. 9 is a view of a cam wheel and connections from the section line 9—9 of Fig. 7; Fig. 10 is a view of a section of film adapted to be used with my improvements; and Fig. 11 is a view of a dial for indicating the position of the apertured disk for regulating the amount of light used.

The mechanism, as illustrated in the drawings, comprises the case or house 1 which contains the spool 2 for the positive film 3 which is drawn therefrom over the rollers 4 and 5, and the spool 6 for the negative film 7 which is drawn therefrom over the roller 8, the films passing from the rollers through the aperture 9 in the bottom of the case. A case or house 10 supports the case 1, contains a top aperture 11 which registers with the aperture 9 and is provided with a bottom aperture 12, the films being drawn from the spools, over the rollers and through the apertures in the operation of printing.

A frame 13 is contained in the case 10 and has the door 14 hinged on its front plate 15, the films passing between the plate and the closed door in the operation of printing.

An arbor 16 is journaled in the frame and has fixed thereon the wheels 17 and 18, the latter being provided with the light apertures 18′ and driven by a belt 19. As the wheel 17 revolves, a cam 20 thereon reciprocates the yoke 21 which is controlled by the vertical guides 22 and 22′, and provided with the laterally projecting bearings or lugs 23 for engaging the periphery of the cam. A yoke 24 is carried by the yoke 21, engages the peripheral cam 25 of the wheel 17 and carries the pins 26 which engage the perforations 7′ along the edge of the films to feed the latter in a well known manner, the shutter wheel 18 cutting off the light when the films are moving and passing light when they are at rest.

A lever 27 has the fulcrum 28 on the frame and the roller 29 which is pressed against a face of the cam 25 by a spring 30 connecting the lever with the frame. A link 31 is pivoted on the bearing 32 of the lever 27 and connected with an arm 33 fixed on a pin or short shaft 34, which is journaled in a bearing 35 on the plate 15. An arm 36 is fixed on the pin 34 and connected by a link 37 with an arm 38 fixed on a shaft 39 which is journaled in bearings 40 on the plate 15. A shoe 41 is fixed on the shaft 39 and provided with the toes 42 which ride on the edges of the negative film, over the perforations 7′, but drop into the slots 7″ formed in a predetermined manner in the edges of film sections of different densities, the member 41 being rocked by the spring 30 and the intermediate mechanism when the offset section of the cam 25 registers with the roller 29. When it is desired to hold this mechanism out of operation, a dog 43, pivoted on the

plate 15, is engaged in the notch 44 of the link 31.

A shaft 45 is journaled in the bearings 46 and 46′ and has the arms 47 and 48 fixed thereon. An arm 49 is pivoted on the arm 47 and is further connected with a laterally extending projection on the arm 47 by a coiled spring 50, the latter passing through the arm 47.

The wheel 18 is provided with a roller or rolling cam 51, adapted to engage the arm 49 and cause it to rock the arms 47 and 48, and with a cam 52 adapted for throwing the arm 49 away from the roller into engagement with the catch 53 which is pivoted on the bearing 54 and normally held against the stop 55 by the spring 56. A coupling 57 is pivotally connected with the catch 53 by the pin 58 and with the link 59 by a pin 60 disposed transversely to the pin 58; and a coupling 61 is pivotally connected with the link by a pin 62 and with a rocker arm 63 by a pin 64 disposed transversely to the pin 62. The arm 63 is journaled on a pin 65 on which it is held by a collar 66, the pin being movable in the bearing 54 and supported by a knuckle 67. A coupling 68 is pivotally connected with the knuckle 67 and with an angular block 69 which is pivoted on a lever 70. The lever 70 is pivoted at one end on the bearing 71 and at its other end engages a seat 72 on one end of a lever 73, the other end of which is pivoted on the bearing 74.

The lever 73 rests on the roller 27′ on the top of the lever 27, the former lever having the steps 73′ and 73″ which engage the roller 27′ in the different positions of the lever 27.

When the cam 25 rocks the lever 27 against the action of the spring 30, so that the toes 42 are drawn back from the film 3, the step 73′ is engaged by the roller 27′ to hold the levers 73 and 70, together with the members 69, 68 and 63 in their elevated position, so that the cam 75 on the wheel 18 clears the arm 63. When the cam 25 has turned so that its offset section permits the spring 30 to rock the lever 27, the roller 27′ can be swung under the notch 73″, whereupon the levers 73 and 70, together with the members 69, 68, 67 and 63 fall and the arm 63 is held in the path of the cam 75. When the cam 75 engages the arm 63, the latter is rocked and acts through the intermediate parts to draw back the catch 53, whereupon the spring 50 pulls the arm 49 into position to be engaged by the roller 51, which rocks the shaft 45.

A sleeve 76 is fixed on the shaft 45 and is provided with the arms 77 which carry a rod 78. A rod 79 is connected at its top with the rod 78 so as to move along the same, and at its bottom with the rocker 80, which is fulcrumed on the carriage 81. A spring 82 connects the rocker with the carriage and acts to draw the former down, it being elevated by the rod 79. The rocker is provided with the pawls 83 and notches 84 adapted for engaging trundles 85′ of the lantern wheel 85 carried by the spindle 86 which is journaled on the carriage 81, the wheel being revolved step by step by the oscillation of the rocker which locks it in its successive positions.

The spindle 86, which carries the wheel 85, has fixed thereon a disk 88 containing radial slots 89 and guides 90. In these guides are movable slides 91 having radial slots 92 of varying size corresponding to the numbers 1 to 12 thereon, the slides being held in position by studs 93 and 94, the latter supported by springs 94′ so as to be movable away from the slides.

The disk 88, which is adapted to be turned intermittently by the action of the arm or lever 49 through the related mechanism described, is also adapted to be operated by a hand lever 95 having the fulcrum 96 and connected with the arm 48 by a link 97. The lever 95 is connected by a link 98 with a double toothed pawl 99 which acts on the trundles 100 of a dial 101 which carries the numerals 1 to 12 arranged in correspondence with the like numerals on the disk 88.

The carriage 81, movable on ways 102, is moved by a rack 103 thereon which is engaged by a pinion 104 fixed on a journaled shaft 105. The shaft has an indicating arm 106 fixed thereon, movable over a fixed dial 107 and adapted to be fixed thereto by the clamp screw 108 which passes through the slot 109 in the dial. A lamp 110 is mounted on the carriage 81, being movable on the ways 111 thereof relatively to the disk 88. The lamp's light aperture 112 is in line with the disk 88's top aperture, which is at rest in a vertical diameter of the disk, and with the aperture 15′ in the plate 15 over which the films are moved intermittently. It will be understood that the adjustments of the carriage 81 and the lamp 110 permit compensation to be made for variations in the candle power of the light used for printing and that the light apertures of the disk cut off light so that the same shall be proportionate to the densities of the film sections previously arranged and perforated.

The film 7 having been made up by combining sections of different densities, such film is arranged on the spool 6 and drawn therefrom as the blank film 3 is drawn from the spool 2, the two passing between the door 14 and the plate 15, past the light aperture 15′.

In order to initially adjust the mechanism for accommodation to the densities of the negative, the hand lever 95 is operated to turn the dial 101 (through the action of the parts 98 and 99) and the disk 88 (through

the action of the parts 97, 48, 45, 76, 77, 78, 79, 80, 85, and 86) until the numeral displayed at the top of the dial indicates that the desired light aperture of the disk is in line with the lamp aperture 112. The apparatus being thus adjusted, the films hold the toes 42 of the member 41 in their retracted position and the member 41 acts (through the parts 39, 38, 37, 36, 34, 33, and 31) to hold the lever 27 in the position shown in Fig. 7, where the roller 27′ engages the step 73′ and holds in the elevated position the parts 73, 70, 69, 68, 67, and 63. With the mechanism in this position, the arm 49, which has been engaged by the dog 53, is held out of engagement with the roller 51 and the position of the disk 88 is undisturbed by the revolution of the shutter wheel 18. As the wheel 18 revolves, the simultaneously revolving cam 20 reciprocates the yoke 21 vertically and the cam 25 causes the yoke 24 to reciprocate horizontally in the yoke 21, whereby the fingers 26 are caused to engage the perforations 7′ of the films and feed them intermittently across the aperture 15′ while the same is covered by the shutter wheel 18.

When a film section of different density passes under the toes 42, the latter drop into the slots 7″ simultaneously with the registration of the offset part of the cam 25 with the roller 28, whereupon the spring 30 throws the lever 27; the roller 27′ is moved from the step 73′ to a point below the step 73″; the part 73, together with the parts connecting it with the arm 63, drops so that the latter is brought into position to be actuated by the cam 75, and the arm 63 is caused to act through the intermediate mechanism on the latch 53 to release the lever 49. The spring 50 now draws the lever 49 into the path of the roller 51, which causes the lever to rock the arm 47, whereby the disk 88 is turned, as previously described, to present in front of the lamp the next light aperture adapted for passing the light required for the particular density of the film. It will be understood that the slides 91 have been arranged initially in sequence so that each forward step of the disk 88 will present a light aperture corresponding to the density of the negative section which is being transferred to the positive film.

Having described my invention, I claim:

1. In a motion picture machine, driving mechanism, film feeding devices operated by said mechanism, a light regulator, and means controlled by a film carried by said devices whereby said driving mechanism is connected with and operates said regulator intermittently.

2. In a motion picture machine, film feeding devices, a light regulator, a revoluble device, means whereby said revoluble device operates said regulator, and means normally supported by a film carried by said film feeding devices for rendering said first named means inoperative.

3. In a motion picture machine, a light regulator, an actuating device, mechanism comprising a rocking member whereby said device operates said regulator, and means for moving said member into and out of position to be operated upon by said device.

4. A motion picture printing machine provided with a shutter having apertures of different sizes for passing light to intermittently moving films, one of which has sections of different densities and is provided with perforations and mechanism comprising a lever coacting with the film aforesaid having perforations therein for shifting said shutter so as to position an aperture thereof adapted for passing the amount of light desired for printing from a coördinated film section.

5. A motion picture printing machine provided with a shutter having means for passing different amounts of light to intermittently moving films, one of said films having sections of different densities and containing perforations coördinated with said sections, and means with which said perforated film coöperates to shift said shutter and position means for passing the amount of light required by the density of the film section, said means comprising a lever mechanism adapted to contact with said perforated film so that it can be shifted when registering with perforations thereof, a cam for rocking said lever mechanism, a second lever mechanism acting in coördination with said lever mechanism first named to throw a catch, an arm adapted to be held out of operative position by said catch until the latter is thrown, a wheel by which said arm is rocked, and means operated by the arm for adjusting the position of the shutter.

6. A motion picture printing machine provided with a shutter having apertures of different sizes for passing different amounts of light to intermittently moving films, one of which has sections of different densities and contains perforations coördinated with said sections, and means with which said film last named coöperates to shift said shutter and position apertures for passing the amount of light required by the different densities of the different film sections, said means comprising automatically acting mechanism having a part bearing on said perforated film and adapted to enter perforations thereof to coördinate the mechanism's action with the density of a corresponding film section, a catch thrown by said mechanism, an arm automatically thrown when disengaged by throwing the catch, a wheel having a device for causing the arm to rock a shaft and a cam for throw-

ing the arm into engagement with the catch out of the path of the device, and mechanism operated by the shaft for shifting the shutter and positioning the apertures thereof.

7. The combination of a driving shaft, film feeding mechanism operated by said shaft, means for projecting light on a section of film fed by said mechanism, and means operated through said shaft under the control of said film for varying the amount of light projected as the density of said film changes.

8. The combination of film feeding devices, a driving wheel for operating said devices, means for projecting light on a section of film fed by said devices, a shutter having means for regulating the amount of light projected on said film, and means operated by said driving wheel for operating said shutter intermittently.

9. The combination, in a photographic printing mechanism, of a film, mechanism for projecting light on a section of said film, a device for varying the amount of light projected on said film, and means operated under control of said film for operating said device, said means comprising revoluble cam mechanism and an arm movable about transverse axes by cams of said last named mechanism whereby said means are thrown into and out of position for operating said device.

10. The combination, in a photographic printing machine, of a film, mechanism for projecting light on a section of said film, a device for varying the amount of light projected on said film, means comprising a shaft for operating said device, an arm adapted for turning said shaft, a revolving member adapted for rocking said arm to effect the turning of said shaft and a cam for moving said arm out of the path of said member to prevent the operation of said device.

11. The combination, in a photographic printing machine, of a film, mechanism for projecting light on a section of said film, a device for varying the amount of light projected on said film, and means for operating said device to automatically vary the light in a predetermined manner, said means comprising an arm adapted to rock in transverse directions, a revoluble member for rocking said arm to effect the movement of said device, and a revoluble member for rocking said arm to prevent its engagement by said member first named.

12. The combination, in a photographic printing machine, of mechanism for regulating light projected for the printing operation, and means for effecting a controlled operation of said mechanism, said means comprising a revoluble wheel having cams thereon, an arm adapted to be moved by one of said cams to effect an operation of said mechanism and by another of said cams to prevent the operation of said mechanism, a device for engaging and holding said arm out of the path of the cam for effecting its first named movement, and means for disengaging said device at predetermined intervals to permit said arm to be operated by the cam first specified.

13. The combination, in a photographic printing machine, of mechanism for projecting light for the printing operation, means comprising a device having variable apertures for regulating the light projected for said printing operation, a revoluble wheel, an arm adapted to move in transverse directions for moving and avoiding the movement of said means, a part on said wheel for operating said arm to effect the movement of said means, a cam on said wheel for moving said arm out of position for engaging said part to avoid the operation of said means, a catch for holding said arm when thrown by said cam, a second cam on said wheel, and means whereby said second cam is caused to operate said catch at predetermined intervals to release said arm and permit the operation of said means first named thereby.

14. The combination, in a photographic printing machine, of a film, means for feeding said film, means for projecting light on said film, and light regulating means operated by said film, said regulating means comprising a shaft, a device connected with said shaft for turning it, a wheel, a part on said wheel for operating said device to turn said shaft, a catch, a second part on said wheel for throwing said device out of the path of said part first named and into engagement with said catch, mechanism for moving said catch to release said device, a third part on said wheel for operating said mechanism, a cam revoluble with said wheel, and means comprising members controlled by said cam and film whereby said mechanism is moved into and out of position to be engaged by said third part.

15. The combination, in a photographic printing machine, of a film, means for feeding said film, means for projecting light on said film, and light regulating means operated by said film, said regulating means comprising a rock shaft, an arm connected with said shaft, a second arm pivoted to said first arm, a catch, a wheel, a part on said wheel for engaging said second arm to rock said arms and shaft, a second part on said wheel for throwing said second arm out of the path of said first part into engagement with said catch, mechanism connected with said catch for disengaging it, a third part on said wheel for operating said mechanism to withdraw said catch, devices for shifting said mechanism out of and into the path of said third part, a revoluble cam, and means

said film and a part operated under control of said cam for shifting the position of said devices.

16. The combination, in a photographic printing machine, of a film, means for feeding said film, means for projecting light on said film, and light regulating means operated under control of said film in a predetermined manner, said regulating means comprising a revoluble device having variable light apertures adapted to be adjusted to the densities of different sections of said film, a ratchet mechanism for giving a step by step movement to said device, reciprocatory mechanism for operating said ratchet mechanism, and revolving devices adapted for operating said reciprocatory mechanism.

17. The combination, in a photographic printing machine, of a perforated film, means for feeding said film, means for projecting light on said film, and light regulating means operated in a predetermined manner by said feeding means under control of said film, said light regulating means comprising devices arranged in sequence for passing therethrough light proportional to densities of said film, said devices being movable to change the sequence thereof.

18. The combination, in a photographic printing machine, of a film containing slots arranged in a predetermined manner, means for feeding said film, a shoe adapted to ride on said film and to enter said slots, a revoluble cam, mechanism connecting said shoe and cam whereby said cam withdraws said shoe from said slots, a revoluble wheel having a cam thereon, a rocker arm, means controlled by said mechanism whereby said rocker arm is shifted into and out of the path of said cam, a revoluble device containing variable light apertures for regulating the amount of light passed for printing, means comprising a second cam on said wheel for turning said device, mechanism comprising a third cam on said wheel for throwing said means last named out of position to be operated by said second cam, and means whereby said arm releases said last named mechanism.

19. The combination, in a photographic printing machine, of a carriage, means for moving said carriage, a disk journaled on said carriage, apertured slides carried by said disk, a lamp adapted for projecting light through the apertures of the respective slides when brought into position therefor, a ratchet mechanism carried by said carriage for turning said disk, a rocking mechanism adapted for operating said ratchet mechanism, said rocking mechanism having an actuating member, a wheel having a cam for operating said actuating member, a cam on said wheel for throwing said actuating member away from said cam first named to inoperative position, means for holding said actuating member in said inoperative position, a film, a second wheel provided with a cam and means whereby said last named wheel and said film release said actuating member.

20. The combination, in a photographic printing machine, of a carriage, a lamp carried thereby, a disk journaled on said carriage and having variable light apertures adapted to be brought in range with said lamp, a ratchet mechanism carried by said carriage and adapted to turn said disk, a rack and pinion adapted for moving said carriage, means for indicating the position of said carriage, and means for fixing the position of said carriage.

21. The combination, in a photographic printing machine, of a lamp, a journaled device having variable light apertures adapted to be brought in range with said lamp, indicating mechanism comprising a revoluble device having indicia corresponding to said apertures and means whereby said dial and indicating mechanism are operated together.

22. The combination, in a photographic printing machine, of a lamp, a journaled device having light apertures of different areas adapted to be brought into range with said lamp, a dial having indicia corresponding to said apertures, mechanism connecting said dial and device to effect their synchronous operation, and a handle for operating said device and dial together.

In testimony whereof I have hereunto set my name this 18th day of August, 1914, in the presence of the subscribing witnesses.

J. TESSIER.

Witnesses:
Jos. G. DENNY, Jr.,
K. H. HUSTON.

664

F. W. HOCHSTETTER.

APPARATUS FOR PRINTING AND PRODUCING MOVING PICTURES.

APPLICATION FILED JULY 17, 1916. RENEWED APR. 11, 1919.

1,325,198.

Patented Dec. 16, 1919.

2 SHEETS—SHEET 1.

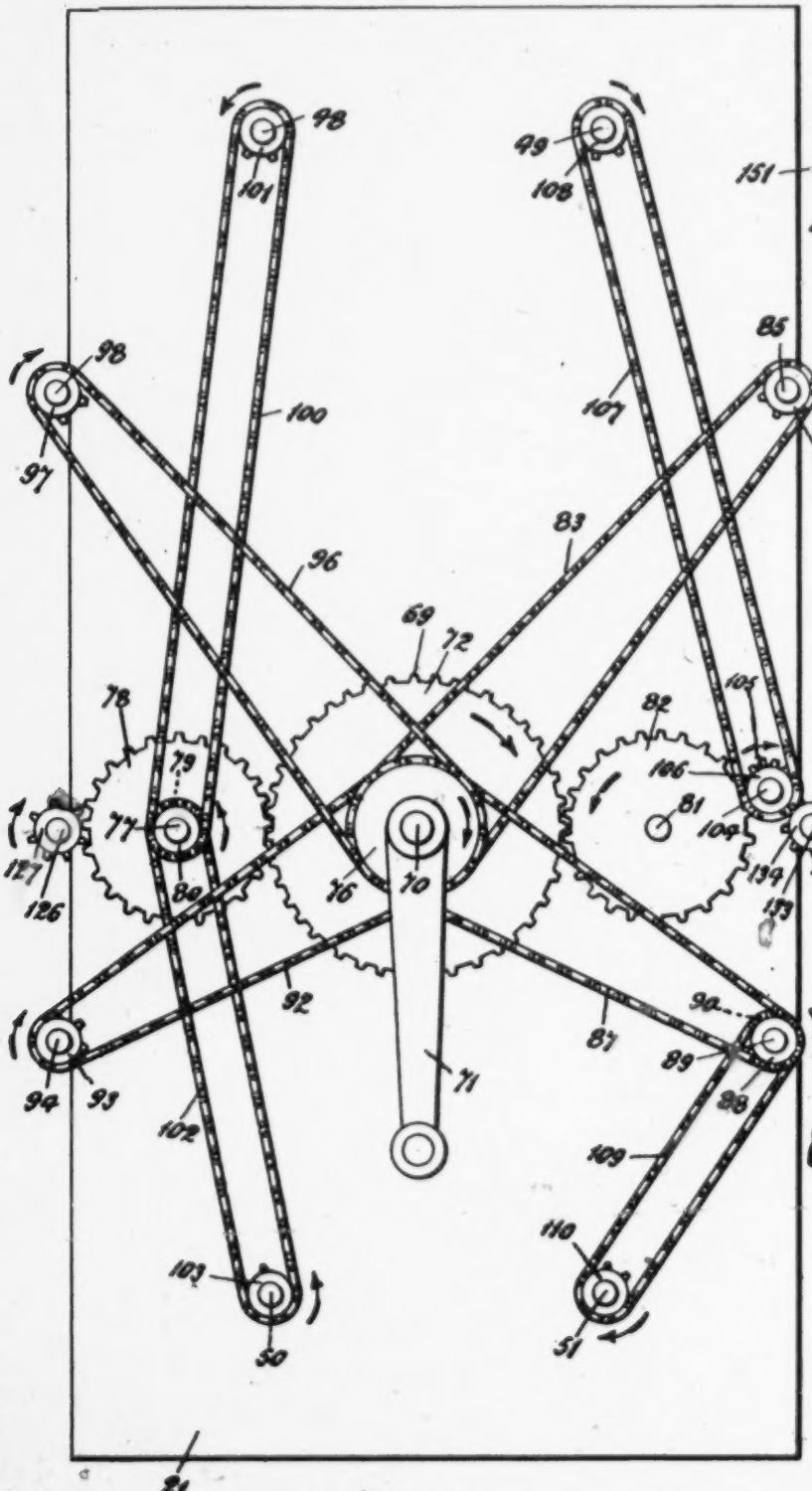

Fig. 1

Fig. 4

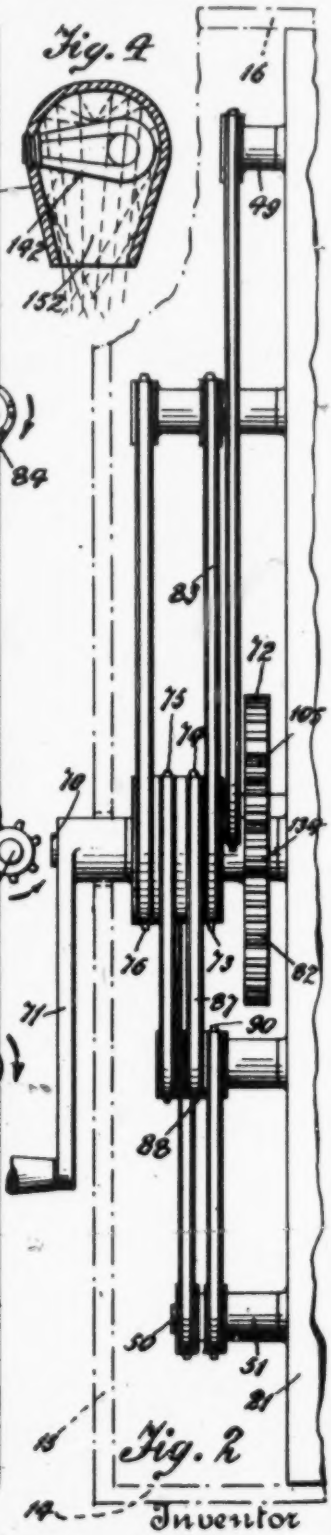

Fig. 2

Inventor

Frederick W. Hochstetter

By his Attorney

M. T. Criswell

F. W. HOCHSTETTER.

665

APPARATUS FOR PRINTING AND PRODUCING MOVING PICTURES.

APPLICATION FILED JULY 17, 1916. RENEWED APR. 11, 1919.

1,325,198.

Patented Dec. 16, 1919.

2 SHEETS—SHEET 2.

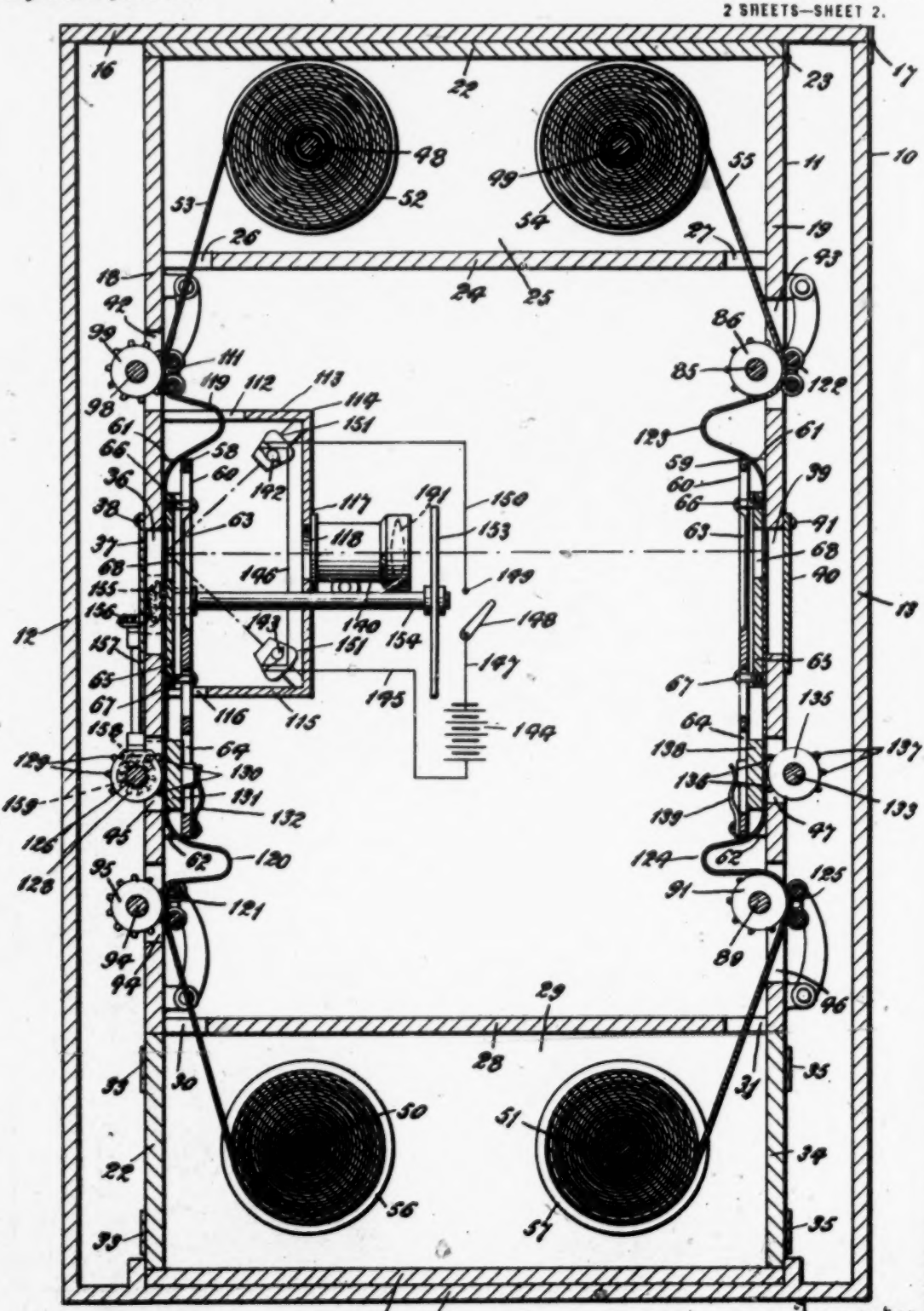

Fig. 3

Inventor

Frederick W. Hochstetter

By his Attorney

H. T. Criswell

UNITED STATES PATENT OFFICE.

FREDERICK W. HOCHSTETTER, OF NEW YORK, N. Y., ASSIGNOR OF ONE-HALF TO PAUL M. PIERSON, OF SCARBOROUGH-ON-THE-HUDSON, NEW YORK.

APPARATUS FOR PRINTING AND PRODUCING MOVING PICTURES.

1,325,198. Specification of Letters Patent. Patented Dec. 16, 1919.

Application filed July 17, 1916, Serial No. 109,831. Renewed April 11, 1919. Serial No. 289,409.

To all whom it may concern:

Be it known that I, FREDERICK W. HOCHSTETTER, a citizen of the United States, and a resident of New York, county and State of New York, have invented a certain new and useful Apparatus for Printing and Producing Moving Pictures, of which the following is a full, clear, and exact specification.

This invention relates to a class of apparatus for providing animated pictures of objects.

My invention has for its object primarily to provide an apparatus whereby moving pictures of living objects, scenery and the like may be printed and produced on an opaque strip, such as paper, or other flexible material of a character ordinarily classed as being non-combustible, in order to permit various pictures for educational, amusement and other purposes to be produced for exhibition in places of instruction and pleasure as well as in homes without endangering the auditors to fire as is incident to the use of the usual very inflammable transparent films, though in instances moving pictures may be printed and produced on transparent films by the use of this process. This is accomplished mainly by providing a process consisting of exposing a sensitized photographic strip to an opaque photographic negative strip synchronously with operative rays of light being reflected on the negative whereby the pictures on the negative will be produced on the sensitized strip to produce a positive, or by exposing a sensitized photographic strip to a positive at the same time reflecting rays of light on the positive whereby the pictures of the positive will be recorded thereon to produce a negative, then subsequently exposing a sensitized photographic strip to the photographic negative simultaneously with operative rays of light being reflected on the negative so that the pictures on the negative will be produced on the sensitized strip to produce a positive.

A practical embodiment is represented in the accompanying drawing forming a part of this specification in which similar characters of reference indicate corresponding parts in all the views the said invention being more fully described hereinafter, and then pointed out in the claims at the end of the description.

In the drawing: Figure 1 is a side elevation of one form of apparatus embodying my invention.

Fig. 2 is a fragmentary view showing partly in detail a side view of the parts of the apparatus illustrated in Fig. 1.

Fig. 3 is a sectional view, partly in detail, taken through the apparatus, and

Fig. 4 is a section, partly in detail, taken through one of the reflectors used in the apparatus.

The apparatus may be constructed of an outer casing 10 and a removable inner casing 11, both of which may be of any desired size as well as being made of any suitable material. The outer casing 10 is preferably substantially rectangular in shape to provide side walls 12 and 13, a bottom 14, a front wall 15, a rear wall, not shown, and a top 16 which is hinged, at 17, to one of the side walls for opening and closing the upper end of the outer casing, this casing being made so that light will be prevented from entering thereinto.

The inner casing 11 is also preferably substantially rectangular in shape, and this casing is of a height so as to fit closely between the bottom 14 and the top 16 of the outer casing, while the width and length of the inner casing, is smaller than the outer casing, as shown, to provide spaces between the sides and fronts of both of the casings. The inner casing is constructed with side walls 18 and 19, a bottom 20, a front wall 21, and a rear wall, not shown, while the top, as 22, is hinged, at 23, to one of the side walls to permit the upper end of the casing to be opened and closed. Transversely of the interior of the casing, and spaced from its hinged top 22, is a partition 24 to provide an upper magazine 25 in the inner casing, and through this partition adjacent to its side walls are openings 26 and 27. Also in the interior of the inner casing, and spaced from its bottom 20, is a second transverse partition 28 to provide a lower magazine 29, and through this partition adjacent to its side walls are openings 30 and 31. Entrance is gained into the lower magazine of the inner casing by a door 32 hinged, at 33, to the side wall 18 of the inner casing as well as by a second door 34 which is hinged, at 35, to the side wall 19 of the casing. Through the central part of the side wall 18 of the inner casing is an opening 36 the

opened and closed by a swinging plate 37 which is pivoted, at 38, on the exterior of this side wall, and through the central part of the side wall 19 of the inner casing is an opening 39 adapted to be closed and opened by a swinging plate 40 pivoted, at 41, on the exterior of this side wall. Also through the side wall 18 of the inner casing above the opening 36 is an opening 42 in register with an opening 43 in the side wall 19 of the casing. Through the lower part of the side wall 18 between its opening 36 and the transverse partition 28 are two spaced openings 44 and 45, while through the lower part of the side wall 19 between its opening 39 and the transverse partition 28 are also two spaced openings 46 and 47 each of which is in register with each of the openings 44 and 45.

Journaled in the front and rear walls of the inner casing 11 are two spaced shafts 48 and 49 extending through the magazine 25 of the casing, and these shafts are of lengths so that one of the corresponding ends thereof extend beyond the front wall 21 of the casing. In the front and rear walls of the inner casing 11, and projecting through the magazine 29 are two other spaced shafts 50 and 51 also of lengths so that one of their corresponding ends extend beyond the front wall of the casing. Removably held on the shaft 48 is a delivery reel 52 having wrapped thereon a film, or strip, as 53, of paper, or other opaque material which is ordinarily considered as being non-combustible, and removably held on the shaft 49 is a second delivery reel 54 having wrapped thereon a film or strip, as 55, which may also be of transparent material, or this strip may also be of paper, or other opaque material of a character usually considered as being non-combustible. The opaque strip 53 may be a photographic negative having any desired number of animated pictures of objects or the strip may be an opaque positive with animated pictures of objects thereon.

The strip 55 may be photographically sensitized for printing positive pictures thereon when the strip 53 is a negative, or the strip 55 may be photographically sensitized for producing a negative when the strip 53 is a positive, as will be hereinafter more fully explained. On the shaft 50 in the magazine 29 of the inner casing is removably held a reel 56 for receiving the moving picture strip 53 from the delivery reel 52, and on the shaft 51 is another removable reel 57 for receiving the moving picture strip 55 from the delivery reel 54.

When the strip 53 is threaded through the interior of the machine from the delivery reel 52 to the receiving reel 56 it is guided past the opening 36 of the side wall 18 of the inner casing 11, and when the strip 55 is likewise threaded through the interior of the machine it is guided past the opening 39 of the side wall 19 of the inner casing. To hold the moving picture strips 53 and 55 in movable contact with the side walls of the inner casing on the side wall 18 interiorly of the inner casing is a framing device, as 58, and on the side wall 19 also on the interior of the casing is another framing device 59. The framing devices 58 and 59 are of similar formations, and these devices may be of any well known, or preferred types, for example, forms of the devices illustrated, each of which is composed of a front plate 60 with right angularly extending arms 61 and 62 on its upper and lower ends, these arms of one of the front plates projecting from the inner surface of the side wall 18 of the inner casing to space the front plate from this wall before the opening 36, while the arms of the second front plate extend from the inner surface of the side wall 19 of the inner casing so as to space the front plate from the side wall 19 in front of its opening 39. Through the upper part of the front plate 60 of each of the framing devices is an opening 63, and this opening of one front plate is in register with the opening 36 of the side wall 18 of the inner casing, while the opening 63 of the other front plate is in register with the opening 39 of the side wall 19 of the inner casing. Through the lower part of the front plate 60 of each of the framing devices is an opening 64, and this opening of one front plate is in register with the opening 45 of the side wall 18 of the inner casing, while the opening 64 of the second front plate is in register with the opening 47 of the side wall 19 of the inner casing. Between the front plate 60 of each of the framing devices and its opposed side wall of the inner casing is a second plate 65 which is held to the front plate 60 of its respective device by bolts, or screws, as 66 and 67, passed through openings in the front plate to allow the second plate to be adjusted toward and from its opposed side wall of the inner casing, and through each of these adjustable second plates is a window 68, both of the windows being in register with each other as well as being in register with the openings 36 and 39 of the side walls of the inner casing and in register with the openings 63 of the front plate 60. The moving picture strip 53 is movably disposed between the adjustable plate 65 of the framing device 58 and the side wall 18 of the inner casing, and the strip 55 is likewise movably arranged between the adjustable plate 65 of the framing device 59 and the side wall 19 of the inner casing so that by employing the plates in this manner they are adapted to be adjusted for yieldingly holding the

strips 53 and 55 during their movements to expose successive parts thereof through the windows 68 and through the openings 63 of the front plates 60 of the framing devices.

In order to transmit the strips 53 and 55 in unison through the machine from the delivery reels 52 and 54 to the receiving reels 56 and 57, respectively, I provide a mechanism, as 69. The mechanism 69 is constructed of a drive shaft, or stud 70 journaled in a bearing on the central part of the front wall 21 of the inner casing 11 of the machine, and this shaft is of a length to extend beyond the front wall 15 of the outer casing 10 through an opening therein. The shaft 70 may be driven by any suitable power, such as a crank handle 71 provided on the end of the shaft exteriorly of the outer casing of the machine. On the shaft 70 adjacent to the front wall 21 of the inner casing is a drive gear 72, and also on this shaft between the drive gear and the front wall of the outer casing are four sprocket wheels 73, 74, 75, 76. Extending from the front plate 21 of the inner casing on alinement with the shaft 70, and in proximity to the side wall 18 of the inner casing, is journaled a stud 77 with an idler gear 78 held thereon, and this gear is in mesh with the drive gear 72. Also held on the stud 77 are two spaced sprocket wheels 79 and 80. Projecting from the front plate 21 of the inner casing on alinement with the shaft 70, and contiguous to the side wall 19 of the inner casing, is journaled a stud 81 with another idler gear 82 held thereon, and this idler gear is in mesh with the drive gear 72. Over the sprocket wheel 73 of the shaft 70 is guided a sprocket chain 83 which passes over a sprocket wheel 84 held on a shaft 85 which is journaled to the upper part of the side wall 19 interiorly of the inner casing, and on the shaft 85 is a sprocket, or toothed drum 86 adapted to be rotated in the opening 43 of the side wall 19 of the inner casing for engaging the usual apertures, not shown, provided in the strip 55. Over the sprocket wheel 74 of the shaft 70 is guided a sprocket chain 87 which passes over a sprocket wheel 88 held on a shaft 89 journaled in the lower part of the side wall 19 interiorly of the inner casing, and on this shaft adjacent to the sprocket wheel 88 is another sprocket wheel 90, while on the central part of the shaft 89 is a sprocket, or toothed drum 91 adapted to be rotated in the opening 46 for engaging the apertures of the strip 55. Guided over the sprocket wheel 75 of the shaft 70 is a sprocket chain 92 passing also over a sprocket wheel 93 held on a shaft 94 journaled on the lower part of the side wall 18 exteriorly of the inner casing, and on the shaft 94 is a sprocket, or toothed drum 95 which is arranged so as to be rotated in the opening 44 of the side wall of the inner casing to engage the usual apertures, not shown, of the strip 53. Over the sprocket wheel 76 of the shaft 70 is guided a sprocket chain 96 passing over a sprocket wheel 97 held on a shaft 98 which is journaled on the upper part of the side wall 18 exteriorly of the inner casing, and on this shaft is a sprocket, or toothed drum 99 rotatably disposed in the opening 42 of the side wall 18 of the inner casing so as to also engage the apertures of the strip 53. On the sprocket wheel 80 of the stud 77 is a sprocket chain 100 which is guided over a sprocket wheel 101 provided on the shaft 48 of the delivery reel 52 exteriorly of the front wall of the inner casing of the machine, and on the sprocket wheel 79 of the stud 77 is a sprocket chain 102 passing over a sprocket 103 arranged on the shaft 50 of the receiving reel exteriorly of the inner casing. On the front wall 21 of the inner casing of the machine adjacent to its side wall 19 is journaled a stud 104 having a pinion 105 held thereon, and this pinion is in mesh with the gear 82 on the stud 81. Also on the stud 104 is held a sprocket wheel 106 on which is a sprocket chain 107 passing over a sprocket wheel 108 on the shaft 49 of the delivery reel 54 exteriorly of the front wall 21 of the inner casing. Over the sprocket wheel 90 of the stud 89 is a sprocket chain 109 which is guided over a sprocket wheel 110 provided on the shaft 51 of the receiving reel 57 exteriorly of the inner casing. By properly proportioning the diameters of the drive gear 72, gears, 78, 82, sprocket wheels 73, 74, 75, 76, as well as the sprocket wheels 79, 80, 93, 97, 84, 88, 90, 93, 97, 101, 103, 106, 108, 110, and also the pinion 105 with relation to each other the studs 77, 81, and the shafts 85, 89, 94, 98 with the shafts 48, 49, 50, 51 will through the driving of the sprocket chains 83, 87, 92, 96, 100, 102, 107, 109 be caused to be driven in unison at corresponding speeds for revolving the toothed drums 84, 88, 94, 97 to transmit the strips 53 and 55 also in unison through the machine.

When the motion picture strip 53 is threaded through the machine it is guided from the delivery reel 52 through the opening 20 of the transverse partition 24 of the inner casing 11, and the strip is moved into engagement with the toothed drum 99 to which it is held in movable contact by compression rollers, as 111, of well known forms arranged on the side wall 18 interiorly of the inner casing. The strip is then passed through an opening 112 in the top wall 113 of a casing, or box, as 114, which extends interiorly of the inner casing of the machine before the registered windows 63 and 68 of the framing device 58, the box being formed with a bottom wall 115 having an opening

116 and a front wall 117 with an opening 118 therethrough which is in register with the windows 63 and 68 of the framing device 58. A loop, as 119, is formed in the strip 53 at the opening 112 of the box 114, and the strip is guided between the side wall 18 of the inner casing 11 and the adjustable plate 65 of the framing device 58 for being transmitted before the windows 63 and 68 of this framing device as well as before the opening 118 of the front wall 117 of the box 114. From the framing device 58 the strip 53 is passed through the opening 116 of the bottom wall of the box 114, and after a second loop 120 is formed in the strip it is guided into engagement with the sprocket drum 95, the strip being held in movable contact with this sprocket drum by compression rollers, as 121, provided on the side wall 18 of the inner casing of the machine. The strip is then passed through the opening 30 of the transverse partition 28 of the inner casing 21 for being wrapped on the receiving reel 56 during the transmission of the strip through the machine.

When the motion picture strip 55 is threaded through the machine it is guided from the delivery reel 54 through the opening 27 of the transverse partition 24 of the inner casing 11, and the strip is moved into engagement with the toothed drum 86 to which it is held in movable contact by compression rollers, as 122, of well known types provided on the side wall 19 of the inner casing. A loop, as 123, is then formed in the strip 55 after which the strip is arranged between the side wall 19 of the inner casing and the adjustable plate 65 of the framing device 59. A second loop, as 124, is then formed in the strip which is guided into engagement with the sprocket drum 91, and the strip is held in movable contact with this sprocket drum by a pair of compression rollers, as 125, arranged on the exterior of the side wall 19 of the inner casing. From the sprocket drum 91 the strip is passed through an opening 31 in the transverse partition 28 of the inner casing for being wrapped on the receiving reel 57 during the transmission of the strip through the machine.

In order to cause the strips 53 and 55 to be intermittently checked during the transmission through the machine, on the exterior of the wall 18 of the inner casing 11 of the machine is journaled a shaft 126 one end of which extends beyond the front wall 21 of the inner casing, and on this extending end of the shaft is a pinion 127 which is in mesh with the gear 78 of the stud 77. Also on the shaft 126 is a drum 128 disposed in the opening 45 of the side wall 18 of the inner casing, and extending from diametrically opposite parts of this drum are sets of spaced teeth, as 129 and 130, adapted to engage the apertures of the moving picture strip, the strip being held in movable contact with the toothed drum by a block, as 131, which is yieldingly forced inwardly of the opening 64 of the front plate 60 of the framing device 58 so as to abut against the strip to hold it in engagement with the toothed drum by a spring, as 132, arranged on the front plate of this framing device. On the exterior of the side wall 19 of the inner casing of the machine is journaled a shaft 133 one end of which extends beyond the front wall 21 of the inner casing, and on this end of the shaft is a pinion 134 meshing with the pinion 105 of the stud 104. On the shaft 133 and disposed in the opening 47 of the side wall 19 of the casing is a drum 135 having spaced sets of teeth 136 and 137 projecting from diametrically opposite parts thereof, and which engage the apertures of the moving picture strip 55, this strip being held in movable contact with the toothed drum by a block, as 138, yieldingly forced inwardly of the opening 64 of the front plate 60 of the framing device 59 so as to contact with the strip to hold it in engagement with the toothed drum 135 by means of a spring, as 139, provided on the front plate of the framing device 59. The pinions 127 and 134 are proportioned so that when the other parts of the mechanism 69 are operated, as above mentioned, the shafts 126 and 133 will be driven at speeds corresponding to the other shafts and studs of the mechanism, and the drums 128 and 135 are also proportioned together with the sets of teeth of each drum being relatively spaced apart that the movement of the strips 53 and 54 when transmitted through the machine will be intermittently checked synchronously so that corresponding successive portions of both strips will be exposed in unison to each other through the registered windows and openings 63 and 68 of the framing devices 58 and 59 as well as through the opening 118 of the box 114 interiorly of the inner casing. While specific forms of the intermittent checking devices are shown and described, instead thereof I may employ any other well-known, or preferred types of devices for causing the strips to be intermittently checked during their transmission through the machine. On the front wall 117 of the box 114 interiorly of the inner casing of the machine is a lens barrel 140 with one or more lenses, as 141, mounted therein, and this barrel is arranged so that the focus of the lens will be in the path of the successive parts of the moving picture strips exposed through the registered windows and openings 63 and 68 of the framing devices 58 and 59 as well as through the opening 118 of the box 114.

Interiorly of the lens box 114 of the inner casing are arranged one, or a plurality of lamps, as 142 and 143, which are preferably electrically lighted from any suitable source

of supply, for example from a battery, as 144, from one terminal of which is a wire 145 leading to one pole of one of the lamps, and the corresponding second poles of the lamps are connected by a wire 146. From the second termin of the battery 144 is a wire 147 leading to a switch 148 adapted to be swung into engagement with a contact 149 of a wire 150 leading to the other pole of the second electric lamp so that by swinging the switch 148 into engagement with the contact 149 the lamps will be lighted by the circuit being closed, the current passing from the battery over the wire 145 to one of the lamps, through which the current will pass over the wire 146, and also from the battery the current will pass over the wire 147, through the switch 148, and over the wire 150 to and through the second electric lamp, the light from these lamps being extinguished by disconnecting the switch 148 from the contact 149. Each of the lamps 142 and 143 is mounted in a reflector, as 151, which may be parabolic, or pear-shaped, as shown, in the form of a mirror, or the reflector may be of metal having an interior reflecting surface for deflecting the rays of light from its lamp through the opening, as 152, of the reflector. One of the reflectors is arranged in the upper part of the box 114, while the other reflector is mounted in the lower part of the box, and these reflectors are disposed in converging arrangement so that the rays of the lamps will be deflected on the portions of the strip 53 exposed through the registered windows 63 and 68 of the framing device 58. The exposures of the strip 53 to the lens 141 will thereby be effected by the reflected rays of light from these lamps.

To cut-off at intervals the light deflected on the exposures of the strip 53 when transmitted through the machine, a shutter, as 153, of any desired form may be provided. The shutter 153 is disposed interiorly of the inner casing for being revolved across the plane of the focus of the lens 141, and this shutter is held on one end of a shaft 154 journaled in the side wall 18 of the inner casing 11 so that the usual spaced blades of the shutter will when rotated cut-off the light deflected on the strip 53. The second end of the shaft 154 extends through an opening in the side wall 18 of the inner casing some distance beyond this side wall, and on this second end of the shaft is a bevel gear 155 in mesh with a bevel gear 156 on the upper part of a vertically disposed shaft 157 which is journaled in bearings on the exterior of the side wall 18 of the inner casing. On the lower end of the shaft 157 is another bevel gear 158 meshing with a bevel gear 159 provided on the shaft 126 of the toothed drum, or intermittent operating device 128, and these bevel gears of the shutter are proportioned so as to be operated when the shaft 126 is driven for cutting-off the light on the strip 53 at proper intervals as is incident with customary methods for shutting-off the light in operating the usual moving picture machines.

In order to print the moving pictures of a photographic opaque negative strip on a sensitized opaque photographic strip, or on a sensitized transparent photographic strip to produce a positive the negative is wrapped on the delivery reel 52, and the sensitized strip is threaded in the machine, as above explained, for transmission to the receiving reel 56 so that successive portions of the negative strip will be exposed through the windows 63 and 68 of the framing device 58. The sensitized strip 55 is wrapped on the delivery reel 54, and this strip is then threaded through the machine, as also above explained, for transmission to the receiving reel 57 so that corresponding successive portions of the strip will be exposed through the windows 63 and 68 of the framing device 59 to the lens 141 for being focused through the opening 118 of the box 114, and through the windows 63 and 68 of the framing device 58 to the sensitized positive. Simultaneously with the focusing of the pictures of the negative the light from the lamps 142 and 143 is deflected by the reflectors 151 on the exposures of the negative strip 53, and the pictures will thereby be printed on the sensitized strip 54 to produce a positive when the machine is operated.

To produce a photographic opaque negative, or a photographic transparent negative of the pictures of an opaque positive strip, the positive strip is wrapped on the delivery reel 52, and the positive is arranged in the machine, as hereinbefore explained, for transmission to the receiving reel 56 so that successive portions of the positive will be exposed through the windows 63 and 68 of the framing device 58 to the lens. A sensitized photographic strip for producing a negative is wrapped on the delivery reel 54, and the strip 55 is threaded through the machine, as described, so as to be transmitted to the receiving reel 57. When the machine is operated the successive pictures of the positive exposed to the lens 141 will by employing the light of the lamps, as above described, be focused on the sensitized strip, 55 for recording the pictures thereon which are afterward converted to a photographic negative in the usual manner.

To print the pictures of this photographic negative when the strip is opaque on a sensitized opaque strip, or on a transparent photographic sensitized strip, to produce a positive, the negative strip 53 is wrapped on the delivery reel 52, and the strip is threaded in the machine, as explained, for transmission to the receiving reel 56 so that consecutive

portions of the negative will be exposed through the windows 63 and 68 of the framing device 58. The sensitized strip 55 is wrapped on the delivery reel 54, and this strip is then threaded through the machine, as described, for being transmitted to the receiving reel 57 in unison with the negative strip 53 so that consecutive portions of the strip will be exposed through the windows 63 and 68 of the framing device 59. When the negative strip 53 and the sensitized strip 55 are transmitted through the machine, and when the light of the lamps 142 and 143 are reflected on the negative strip 53, the pictures of this negative will be focused by the lens 141 on the successive exposures of the sensitized strip to produce a positive of the pictures when the strip is developed in the customary manner. By this process moving pictures may be readily printed from an opaque negative strip on an opaque, or transparent sensitized strip to produce positive pictures of the negative, or moving pictures may be reproduced from an opaque positive strip to an opaque, or transparent sensitized strip to produce a negative and then printed on a sensitized strip to produce a positive. Moreover, by employing a suitable lens the pictures may be enlarged or reduced in sizes, as occasion requires.

To operate the machine following the proper arrangement of the moving picture strip in the machine, the crank handle 71 is turned for revolving the shaft 70, and the drive gear 72 with the sprocket wheels 73, 74, 75, 76 will be revolved. The gears 78 and 82 will then be rotated in opposite directions. The rotation of the gear 78 will drive the sprocket chains 92, 96, 100, 102 for driving the shafts 94, 98, 126, 48, 50 to rotate the sprocket wheels 93, 97, 101, 103 with the pinion 127, drum 128, and toothed drums 95 and 99 to intermittently transmit the strip 53 from the delivery reel 52 to the receiving reel 56, the shutter 153 being operated in unison with these parts, as hereinbefore explained. Simultaneously with the rotation of the sprocket wheels 73, 74, 75, 76 the sprocket chains 83 and 87 will be driven to rotate the sprocket wheel 84, shaft 85, toothed drum 86, sprocket wheels 88, 90, shaft 89, toothed drum 91, sprocket chain 109, sprocket wheel 110 and shaft 51 of the receiving reel 57, and with the rotation of the gear 82, the pinion 105, sprocket wheel 106, shaft 104, pinion 134, shaft 133, drum 135, sprocket chain 107, sprocket wheel 108, and the shaft 49 will be operated to intermittently transmit the strip 55 from the delivery reel 54 to the receiving reel 57. By previously closing the electric circuit to the lamps 140 and 142, as above explained, the light from the lamps will be deflected by the reflectors on the strip 53 during the operation of the machine, and while a specific form of machine is herein illustrated and described, I may employ any other suitable apparatus separately or collectively for practising my process.

In the foregoing description, I have embodied the preferred form of my invention, but I do not wish to be understood as limiting myself thereto, as I am aware that modifications may be made therein, without departing from the principle, or sacrificing any of the advantages of this invention, therefore I reserve to myself the right to make such changes as fairly fall within the scope thereof.

Having thus described my invention, I claim as new and desire to secure by Letters Patent:—

1. In an apparatus for printing and producing moving pictures, a light-proof casing, a second casing within the light-proof casing, having two spaced registered exposure windows, a chamber within the second casing, a lens on the chamber arranged so that its axis coincides with the center of the exposure windows, light emitting means in said chamber for projecting light in one of the windows, means for intermittently transmitting two photographic strips in synchronism before both of said exposure windows, and means for cutting-off at intervals the light focused by the lens.

2. In an apparatus for printing and producing moving pictures, a light-proof casing, a second casing removably arranged in the light-proof casing, having two spaced registered exposure windows, a chamber within the second casing, a lens on the chamber arranged so that its axis coincides with the center of the exposure windows, light emitting means in said chamber for projecting light in one of the windows, and means for intermittently transmitting two photographic strips in synchronism before said windows.

3. In an apparatus for printing and producing moving pictures, a light-proof casing, a second casing within the light-proof casing and having two spaced registered exposure windows, a chamber within said second casing adjacent one exposure window, a lens on the chamber between said windows arranged so that its axis substantially coincides with the center of the exposure windows, light emitting means in said chamber for projecting light in the adjacent window, means for intermittently transmitting two photographic strips in synchronism before said windows within said second casing, means for cutting off at intervals the light focused by the lens, the strip transmitting means and the light cut-off means including interconnected gearing supported by said second casing within the light-proof casing, and means outside of said light-proof casing for operating said gearing.

4. In an apparatus for printing and producing moving pictures, a casing having two spaced registered exposure windows, a chamber within said casing adjacent one exposure window, a lens on the chamber between said windows arranged so that its axis substantially coincides with the center of the exposure windows, light-emitting means in said chamber for projecting light in the adjacent window, partitions within the upper and lower portions of said casing forming upper and lower reel receiving chambers, a pair of reels within each of said reel receiving chambers for two photographic strips, and means supported by the casing and operatively associated with said reels and said strips for intermittently transmitting the latter in synchronism before said windows.

5. In an apparatus for printing and producing moving pictures, a box-like light-proof casing having an openable top wall, a second smaller box-like casing within the light-proof casing having registered exposure windows in the opposite side walls thereof, and provided with an openable top wall, framing devices for said windows mounted on said side walls, photographic strip loop forming and feeding means mounted on each of said side walls, a lens mounted within said second casing in alinement with and between said windows, light emitting means in said second casing to project light in one of said windows, transverse horizontal partitions in the second casing providing upper and lower reel-receiving chambers therein, doors for the lower reel-receiving chamber in said side walls, and means to operate said loop forming and feeding means to transmit the photographic strips in synchronism before said windows.

This specification signed and witnessed this 15th day of July A. D. 1916.

FREDERICK W. HOCHSTETTER.

Witnesses:
GEORGE F. BENTLEY,
C. SHIEGLEY.

673

A. F. JOBKE.

COPYING CAMERA.

APPLICATION FILED MAY 8, 1919.

1,344,896.

Patented June 29, 1920.

2 SHEETS—SHEET 1.

Fig. 1.

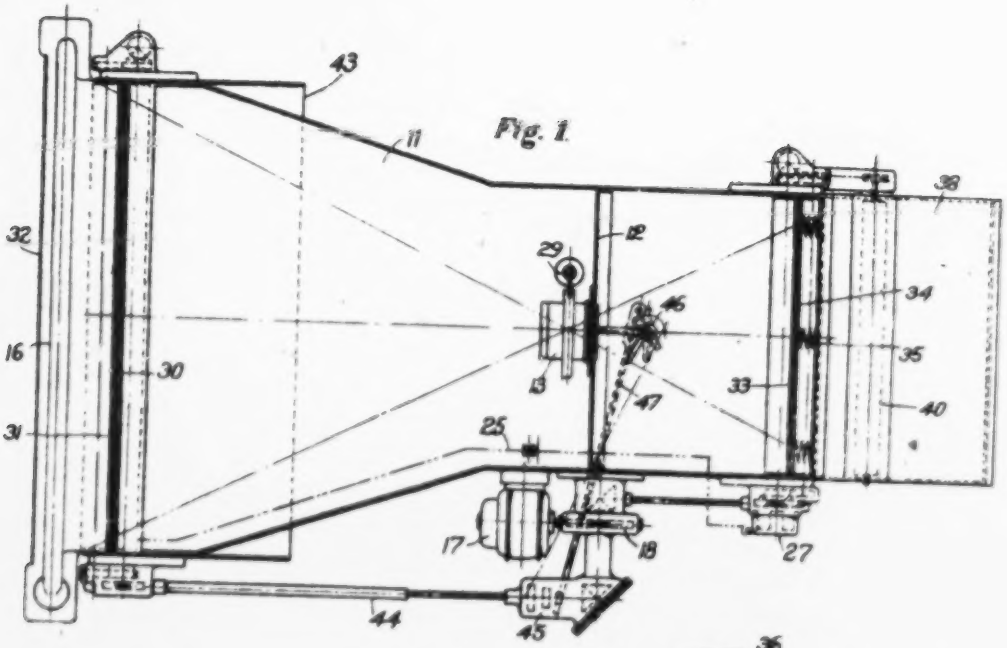

Fig. 2.

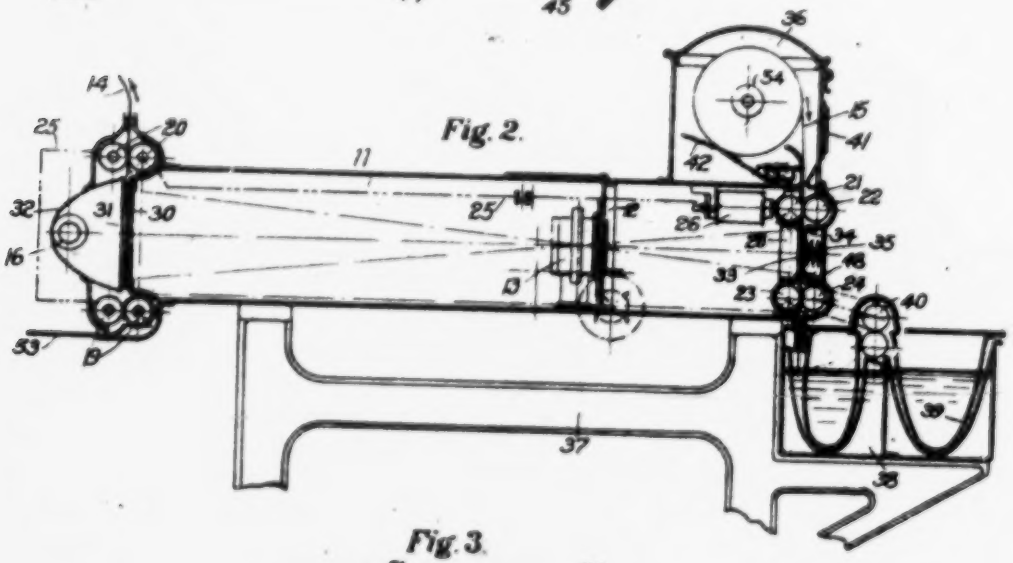

Fig. 3.

INVENTOR.

August F. Jobke

A. F. JOBKE.

COPYING CAMERA.

APPLICATION FILED MAY 8, 1919.

1,344,896.

Patented June 29, 1920.

2 SHEETS—SHEET 2.

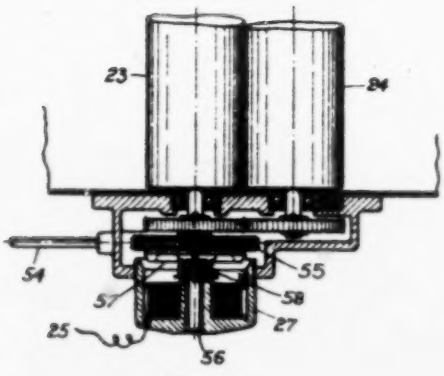

Fig. 4

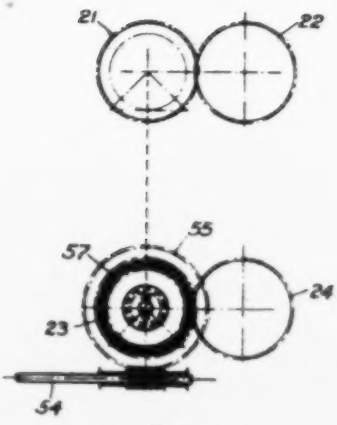

Fig. 5

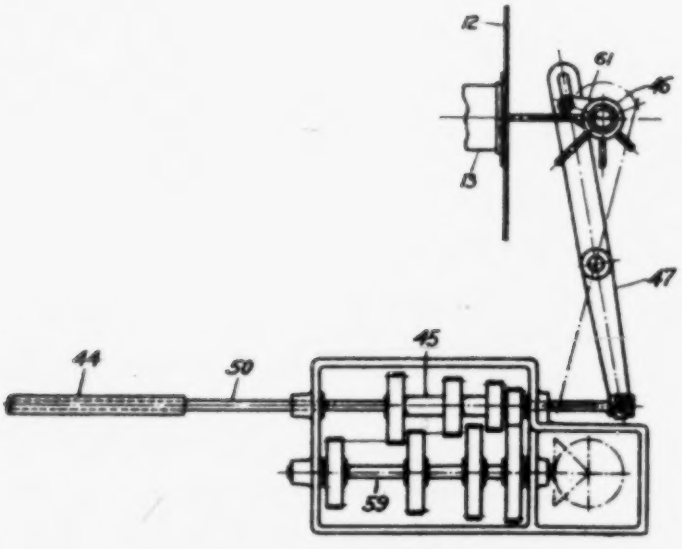

Fig. 6

INVENTOR.

August F. Jobke

UNITED STATES PATENT OFFICE.

AUGUST F. JOSEK, OF DETROIT, MICHIGAN.

COPYING-CAMERA.

1,344,896. Specification of Letters Patent. Patented June 29, 1920.

Application filed May 8, 1919. Serial No. 296,234.

To all whom it may concern:

Be it known that I, AUGUST F. JOSEK, a citizen of the United States, residing at Detroit, Wayne county, in the State of Michigan, have invented certain new and useful Improvements in Copying-Cameras, of which the following is a specification.

My invention relates particularly to photographic apparatus useful in the reproduction of graphic records, as required in the various branches of engineering,—for example, prints from tracings on linen or transparent paper in the same size or on a reduced scale, and its purpose is the provision of continuous operation, so as to make full use of the light provided and to produce a larger output during the same length of time than other arrangements could make possible. The continuous operation enables also the production of copies of unlimited length, thereby avoiding the cumbersome joining together with adhesive of the limited lengths of pieces, as is the practice now where long plans of buildings or industrial plants and the like, are to be reproduced. A similar advantage will also be found in the copying of panoramic films and similar objects.

The operation of this invention is based on the following well known principle in photography: If a camera is sharply focused on a subject moving parallel to the screen, *i. e.* normal to the principal ray of light, the image produced thereby moves in an opposite direction with a velocity proportionate to the conjugate focal distances. Replacing the screen with a sensitized medium and moving the latter during the exposure with the velocity of the image, renders the same immovable relative to the copying medium and therefore a full exposure can be accomplished through the continuously traveling image. This enables in a suitable arrangement, to develop and fix the impression on the copying medium in the same succession on one part, while another is still being exposed. The length of the original to be copied is thereby not limited in the direction of the movement and it affects only the time of operation.

In the accompanying drawings an illustration is given of an arrangement, which embodies the parts and combination of my invention, and Figure 1 therein shows a horizontal section through the apparatus, arranged for the reproduction at various ratios of reduction, while Fig. 2, represents a vertical section through the same, but arranged for one ratio of reduction. Fig. 3 illustrates the arrangement of a cutter of the sensitized medium on which an exposure has been made. Fig. 4 illustrates the arrangement of the drive for the rolls conveying the copying medium, and a magnetic clutch to disengage the rolls from the moving drive, while Fig. 5 shows an axial view of the conical clutch-disk and diagrammatically a worm and gear drive to operate the four rolls simultaneously. Fig. 6 shows in detail the connecting apparatus between a change-gear drive and the stops determining the position of the lens-board, to enable different ratios of reduction.

A dark chamber or camera (11) is partitioned, light-proof, in two parts by a lens-board (12) in whose center a photographic lens (13) preferably an anastigmat of large aperture is mounted. The optical center of this lens is located between the planes of contact of two sets of friction rolls on each end of the camera (11) so that their distances from the lens have the ratio of conjugate focal distances for a predetermined factor of reduction, either to the same size or one differing therefrom. A transparent drawing (14) moving in the direction of the arrow in front of a light source (16) will therefore produce a stationary image on the sensitive paper (15), traveling in the direction of the indicating arrow. A motor (17) connected to the source which also furnishes the light, drives through a worm and gearing train (18) the two sets of friction rolls at their proper speeds. The pair of friction rolls (19) driven direct from the gear train (18) is supposed to have a tight grip on the drawing to be fed from the guide (32) into the machine, while the second pair (20) may have an elastic grip on the same, permitting a slip at a certain tension. With a gear ratio of one tooth higher at 20 than at 19, the drawing will always be straight and passing the light under a certain tension. A similar arrangement may be made with the rolls 21 to 24, inclusive, the rolls 23 and 24 having the lesser grip and the higher speed.

While with this arrangement a slip takes place between the one set of rolls and the passing medium, a slip can also be produced in a small friction clutch interposed between the friction rolls and their driving gears.

This arrangement may be found preferable since it does not impose any wear on the drawings to be copied.

In order not to waste any of the sensitive paper (15), I have arranged to control its feed through the tracing (14), since the operator may forget or not be able to oversee the control of the feed. I accomplish this by mounting the rollers 21 and 23 in a frame (28) which is slightly movable, so that the friction on the paper (15) can be removed and the latter come to a standstill with turning rolls. The control of the necessary movement is obtained with an electromagnet (26) which is in series connected with the rolls 19 and 20 in a circuit (25), either fed from the main circuit furnishing all the power, or, preferably, from a few battery cells having a low voltage, thereby avoiding the dangers of grounding or high voltage across the thickness of the tracing (14). This circuit can be operated with the main switch. It can be seen now, that when there is no tracing in the sets of rolls 19 or 20, the circuit through the magnet (26) is closed; therefore, rolls 21 and 23 do not propel the paper (15). But after a tracing has entered rolls (19) or is passing across rolls 20, the circuit is interrupted and rolls 21 and 23 exert their pressure upon paper (15) and move it along.

The arrangement with electromagnet (26) is one of several to be used, and I therefore would not restrict myself to the same. Another alternative would be to arrange a pot-magnet (27) as in Fig. 1, in connection with a positive or a friction clutch to release the same and thereby prevent the rollers 21 to 24 inclusive, from turning, when the circuit through the magnet is closed. This arrangement is shown in more detail in Fig. 4, where a worm on shaft (54) transmits its motion from the driving gear to a worm-gear (55), running loosely on the roller-shaft (56), which preferably extends through the pot-magnet (27) frictionless, in order to prevent an axial magnetic pull on the same. (57) is a magnetic friction-cone disk, which fits into a recess of the same angularity in the worm-gear and slides on a key in the shaft (56). A spring (58) keeps the friction-disk and worm-gear engaged, as long as the outer pole of the electromagnet (27) does not pull the rim of the former out of contact. Therefore the drive engages the combined train of gears in Fig. 5, to move rolls (21) to (24) inclusive and thereby propel the sensitized paper with the proper speed. Fig. 5 shows the friction-disk (57) in a plane view, and diagrammatically its connection with the worm gear, and also the connection of the four rollers (21) to (24) through miter-gears. In order to keep the circuit through the rolls 19 and 20 insulated, the latter may be made of insulating material such as wood and covered by a metallic shell, as the contact medium.

For the purpose of omitting part of the reproduction, as in the case of a change being desired, an electromagnet (29) may be arranged to operate a shutter in the lens of the bulb-exposure type at the will of the operator. This will prevent the passage of light for the exposure as desired.

In order to positively guide the tracing, there are provided a clear glass plate (30) and another one, preferably matte (31), with such a distance between them, that the tracing will glide in a straight plane, but without undue friction, until taken up by the rollers (20). Their width will correspond to that of a reflector (32) so that a maximum of light passes through them.

Similarly, a clear glass plate (33) and preferably, a reflecting plate (34) of polished metal or white material, are arranged on the copying side to guide the sensitive paper (15) in a straight plane and in the exact focal distance. Springs (35) with a slight pressure may press the plate (34), and therewith the paper in its exact position. Since through a copying paper with white stock some of the light may pass, a reflector will re-direct the same and have some additional chemical action on the under side of the sensitive coating, therefore the total chemical action will be increased.

In order to accomplish a continuous process for the finishing of the reproduction, the following arrangement will now be described: The sensitive paper (15) is contained in a light-proof box (36) and with proper guides is directed through the sets of rollers 21 to 24, inclusive, between which it will have received the exposure of the drawing 14. The body of the camera is light-proof connected to the tanks (38) necessary for a continuous development and fixing, which are mounted with the camera on a common support (37). Wire guides (39) are provided, to positively guide the paper while in the solutions and to prevent the paper from sticking to the walls of the tanks through adhesion or suction. A set of rollers (40) driven from friction roller 24, serves at the same time as a propeller and a wringer, to prevent the carrying over of solution in another tank.

A drier, provided in the customary way, will complete the arrangement for the production of a complete train of finished copies on a continuous strip of copying paper.

While at 41 a window with red or orange glass is provided to permit the inspection of the copying paper, a lever (42) under the action of a spring, is arranged in a circuit adapted to disconnect the power supply, as soon as this lever, after the complete un-

rolling of the paper supply, touches the metal shell (54) of its supporting mandrel. Therefore, after the exhaustion of the paper, the machine comes to rest.

In referring now to Fig. 1, I shall describe the arrangement, which enables the production of copies at different rates of reduction.

43 denotes an open box, telescoping light-proof into the open end of the chamber 11 and carrying the guides and propelling rollers as also the light source with its reflector. Proper marks may determine the exact positions of this box to be selected to give the focal distances from the lens to the drawings to be copied. The drive shaft (44) for the roller train (19) and (20) is made telescoping on a key or spline to provide a positive drive for any position. A change gear (45) provides for the variation of speed as is required for the different ratios of reduction, while a variation of field excitation of the motor provides for speeding up of the complete drive for a higher reduction.

For the purpose of varying reduction, a shifting of the lens-carrier (12) must be provided, and I arrange the stop (46) with pegs of different lengths at different angles, as the equivalent of a cam, to limit the movement of the lens-carrier after the selected position has been obtained. A lever (47) connecting a crank at 46 with the shaft operating the change gear (45) accomplishes the selection of lens portion and corresponding speed ratio in one operation. For the convenience of illustration Fig. 6 shows the change-gear case turned 90° around shaft (44), and (59) denotes a rigidly held gear-shaft carrying a number of spur-gears, corresponding to the required number of reductions, while (45) is a set of corresponding gears on an axially sliding shaft (60). All spur-gears are spaced so that a movement for the face-width plus the necessary clearance brings another pair of gears into mesh. The lever (47) by means of collars and sliding ring, takes a corresponding angular position, which in turn, at the other end, corresponds to a different angular position of the crank 61, rigidly connected with the lens stop (46). The turning of this crank provides for the change of angular position of lever (47) and, therefore, the simultaneous adjustment of lens-stop and change-gear.

At 48 a cutter-arrangement is indicated, which permits cutting off the exposed stock, if the machine is to discontinue operation, and in Fig. 3 an arrangement is shown in a plane view from above, which may serve as an illustration of the same.

A triangular knife (49) swings around a trunnion (50), which glides in grooves serving as guides. A pin (51) preferably also guided, takes up the pull of one of the two attached strings, pulling in opposite directions. The resistance of the paper (15) against cutting and the pressure of the trunnion against the groove place the cutting edge into the right position to cut in the direction of the pulling string. When there is no pull exerted, the blade should be made to take the position as shown in dot and dash, which can simply be taken care of by a leaf-spring. Thus the cutting will be done alternately from the right and left.

Having thus described my invention, what I claim and desire to secure by Letters Patent, is:—

1. In a photographic apparatus a dark chamber with openings at the two ends for the admission and passage of light, two pairs of friction rollers at each end placed in parallel planes of contact at conjugate focal distances, a lens and lens board separating the said chamber into two light-proof compartments and means, including an electric circuit through the two pairs of friction rollers propelling the medium to be copied, to control the feed by the set of friction rollers propelling the sensitive copying medium.

2. In a photographic apparatus a dark chamber with openings at the two ends for the admission and passage of light, two pairs of friction rollers at each end placed in parallel planes of contact at conjugate focal distances, a lens and lens board separating the said chamber into two light-proof compartments and means, including an electromagnet and its circuit through the two pairs of friction-rollers propelling the medium to be copied, to control the feed by the set of friction rollers propelling the sensitive copying medium, the feed being established through the interposition of the medium to be copied between one of the corresponding pairs of friction rollers causing the release of the electromagnet.

3. In a photographic apparatus a dark chamber with openings at the two ends for the admission and passage of light, two pairs of friction rollers at each end placed in parallel planes of contact at conjugate focal distances, a lens and lens board separating the said chamber into two light-proof compartments, a friction clutch in the drive of the set of friction rollers propelling the copying medium, and means, including an electro-magnet and its circuit through the two pairs of friction rollers propelling the medium to be copied, controlling the friction clutch.

4. In a photographic apparatus a dark chamber with openings at the two ends for the admission and passage of light, two pairs of friction rollers at each end placed in parallel planes of contact at conjugate focal distances, a lens and lens board separating the said chamber into two light-proof compartments, a friction clutch in the drive of the set of friction rollers feeding the

copying medium, and means, including an electromagnet and its circuit through the two pairs of friction rollers propelling the medium to be copied, to control the said friction clutch, the feed of the copying medium being established through the interposition of the medium to be copied between one of the corresponding pairs of friction rollers.

5. In a photographic apparatus a dark chamber with two pairs of friction rollers at each end placed in parallel planes of contact, a lens board and lens adapted to separate the chamber into two light-proof compartments, providing conjugate focal distances between the said planes and a pair of guide plates placed at one end resiliently in contact with each other in one of the said planes, the guide plate nearer the lens being of transparent material and the guide plate on the outward side having a reflecting surface toward the said lens.

6. In a photographic apparatus a dark chamber with two pairs of friction rollers at each end, placed in parallel planes of contact and rotating in opposite directions, openings in the chamber between each two pairs of friction rollers for the admission and passage of light, the second pair of rollers in the direction of rotation rotating faster than the first pair and providing for less friction.

7. In a photographic apparatus a dark chamber with a movable extention at one end and two pairs of friction rollers at the end of the extension and at the opposite end of the chamber, placed in parallel planes of contact, openings in the chamber and its extension between the two pairs of rollers for the admission and passage of light, a movable lens board and lens adapted to establish variable conjugate focal distances between the said parallel planes and a mechanical drive adapted to vary the speed ratio of the two sets of friction rollers in the ratio of the adjacent conjugate focal distances.

8. In a photographic apparatus a dark chamber with a movable extension at one end and two pairs of friction rollers at the end of the extension and at the opposite end of the chamber, placed in parallel planes of contact, openings in the chamber and its extension between each two pairs of friction rollers for the admission and passage of light, a movable lens board and lens adapted to establish pre-determined variable conjugate focal distances between the said parallel planes, means to stop the said lens board in its pre-determined position, and a mechanical drive provided with a change gear arrangement to vary the speed ratio of the two sets of friction rollers in the ratio of the adjacent conjugate focal distances.

9. In a photographic apparatus a dark chamber with a movable extension at one end and two pairs of friction rollers at the end of the extension and at the opposite end of the chamber, placed in parallel planes of contact, openings in the chamber and its extension between each two pairs of friction rollers for the admission and passage of light, a movable lens board and lens adapted to establish pre-determined variable conjugate focal distances between the said parallel planes, means to arrest the said lens board in its pre-determined position, including stops of corresponding lengths rotatable radially about a central bearing, a mechanical drive provided with a change gear arrangement to vary the speed ratio with respective conjugate focal distances, and means, including a lever, for simultaneously adjusting the roller speeds and lens positions.

10. In a photographic apparatus a dark chamber with a movable extension at one end and two pairs of friction rollers at the end of the extension and at the opposite end of the chamber, placed in parallel planes of contact, openings in the chamber and its extension between each two pairs of friction rollers for the admission and passage of light, a movable lens board and lens adapted to establish predetermined variable conjugate focal distances between the said parallel planes, means to arrest the said lens board in its predetermined position, including stops of corresponding lengths rotatable radially about a central bearing, a mechanical drive provided with a change-gear arrangement to vary the speed ratio with the respective conjugate focal distances, means, including a lever, for simultaneously adjusting the roller speeds and lens positions, means, including an electromagnet and its circuit through the two pairs of friction rollers at the said movable extension, and a friction-clutch in the drive of the friction rollers at the said dark chamber, released by the said electromagnet through the interposition of a medium to be copied between the corresponding friction rollers.

In testimony whereof, I affix my signature this sixth day of May, 1919.

AUGUST F. JOBKE.

PLAINTIFF'S EXHIBIT No. 28 E

100,748

PATENT SPECIFICATION

LIBRARY
APR 26 1919
U.S. PATENT OFFICE

Convention Date (Germany), June 22, 1915.
Application Date (in the United Kingdom), June 22, 1916. No. 8798/16.
Complete Accepted, Mar. 20, 1919.

COMPLETE SPECIFICATION.

Improvements relating to the Combined use of Kinematographs and Talking Machines.

I, ERIC MAGNUS CAMPBELL TIGERSTEDT, of 4, Asmusen Allee, Copenhagen, Denmark, Engineer, do hereby declare the nature of this invention and in what manner the same is to be performed, to be particularly described and ascertained in and by the following statement:—

This invention relates to an improved system or combination of a kinematograph with an apparatus for recording or reproducing sounds.

It has been proposed in photographing a scene to record at the same time sounds or conversations on a steel band secured to the film, and constituting a Poulsen telegraphonic record. With the proposed construction, in photographing the images, the film can be driven only at a restricted velocity, so that with the steel band secured to the film the records would be situated too closely together and the magnetisations of the high strains or tones would partly coincide, so that neither the recording nor the reproducing of the sounds would be satisfactory. In order to obtain an excellent result it is necessary that the steel band should be driven at a velocity exceeding that of the film thereby enabling the magnetisations of the steel band to be located at a sufficiently great distance from each other. It has also been proposed to use a combination of kinematograph film and an optical sound band for recording or reproducing sounds and to drive such band, at a faster speed than the kinematograph film.

The present invention consists in the employment in combination of a kinematograph film and a Poulsen sound band arranged to be operated at a higher velocity than the film band with the object of producing a more precise record and reproduction of the sounds. Other features of the invention will appear from the following description.

In the drawing the invention is diagrammatically illustrated by way of example.

Fig. 1 shows diagrammatically an apparatus for simultaneously photographing images and recording sounds.

Fig. 2 is an apparatus for simultaneously exhibiting images and reproducing sounds, conversations or the like.

Fig. 3 shows a detail.

The photographing of a scene is effected by a common kinematograph 1. By the operation of the film band 2 a roller 3 is positively turned with a peripheral

velocity equal to the lineal velocity of the band 2. On the axis of the roller 3 and outside the kinematograph 1 is provided another roller 32 over which a cord 4 is guided. The diameter of the roller 32 is greater than that of said roller 3. The cord 4 drives a small roller 33 on the shaft of which is secured another roller 5 which moves a steel band 6 with a velocity exceeding the velocity of the kinematograph film 2. The steel band 6 passes between the cores of two electromagnets 7 which are connected with a source of current (battery 8) and a microphone receiving the sound waves. The sound waves serve in effect to produce in the electromagnets 7 fluctuations of current which effect a corresponding local magnetisation of the steel band 6. At the same time the corresponding images are photographed on the film band 2.

In the exhibiting apparatus according to Fig. 2 the images are projected by an apparatus 9 on to a screen 10. On the shaft of the driving roller 35 actuating the film band 2 is fixed a larger roller 11 which is coupled by a transmission connection 12 to a small roller 13. On the axis of the roller 13 is provided another roller 34 which serves as a guide for the magnetised steel band. By the driving force of the roller 34 the steel band 6 is passed between the cores of two electromagnets 14 which are connected to a strengthening relay 15 (for instance a Lieben-tube). The fluctuations of current originated in the electromagnets 14 produce correspondingly strengthened fluctuations in the circuit of a powerful source of current (battery 16) which fluctuations are transmitted to a loud speaking telephone 17 provided near the screen 10. Thus, the telephone 17 reproduces the sounds, conversations or the like in synchronism with the exhibition of images by the kinematograph, it being a presupposition of course that the ratio between the speeds of the steel band and the film band of the exhibiting apparatus is equal to the ratio between the corresponding velocities of the steel band and kinematograph driving mechanism shown in Fig. 1.

In Fig. 3 is illustrated a device which permits disconnection of the coupling between the kinematograph and the apparatus for reproducing records, if it be desired for any reason (for instance for producing particular effects) to stop the film and to allow the mechanism for reproducing sounds to continue its operation.

On the shaft 18 which is continuously rotated by a motor 22 is keyed a roller 36 for moving the steel band and one member 19 of a clutch, the other member 20 of the clutch being loosely mounted on the shaft. On the clutch member 20 is secured the roller 21 forming a transmission element for the driving mechanism of the film band. The clutch member 20 is provided with a peripheral groove which is engaged by the one end of a lever 30. A spring 31 tends to move the two clutch members into engagement with each other. The other end of the lever 30 forms an armature which, when attracted by the energization of an electro-magnet or solenoid 29, is moved in opposition to the spring 31 so that the clutch member 20 is shifted out of engagement with the clutch member 19 and the actuating device for the film band brought out of operative relation with the driving means. By operating a contact button 27 the electromagnet 29 is supplied with energy from a source of current 28. The electromagnet 29 may also automatically be included in the circuit. For this purpose the shaft 18 is provided with a worm 23 which engages a worm wheel having a projection 24. In operation the projection 24 actuates the free end of a bell-crank lever 25 which closes a contact 26 so that the electromagnet 29 is supplied with current and the clutch member 20 moved into its operative position. As soon as the projection 24 has passed the end of the lever 25, the contact 26 is opened. The time during which the contact 26 is closed depends upon the form of the projection.

The lever 30 may also be operated by hand.

The operative relation between the driving mechanism of the film band and the driving mechanism of the steel band may be produced electrically. In recording sounds or the like, several steel bands may simultaneously be acted upon in parallel in order to save or facilitate subsequent duplication.

Having now particularly described and ascertained the nature of my said invention and in what manner the same is to be performed, I declare that what I claim is:—

1. A system for recording and reproducing sounds and for photographing and exhibiting images, consisting of a kinematograph and a talking machine for Poulsen Phonographic records combined therewith, characterised by the fact that the record band is arranged to be operated at a higher velocity than the film band, with the object of producing a more precise record and reproduction of the sounds.

2. A system as claimed in Claim 1, characterized by the fact that the kinematograph is at predetermined intervals automatically connected with and disconnected from the talking machine by means of a switching device which is controlled by the driving mechanism of the record band.

3. A system as claimed in Claim 1, characterized by the fact that the sounds are recorded on a plurality of steel bands in the recording apparatus in order to save or facilitate subsequent duplication of the records.

Dated this 22nd day of June, 1916.

CRUIKSHANK & FAIRWEATHER LIMITED,
HAROLD CRUIKSHANK FAIRWEATHER,
Director,
65—66, Chancery Lane, London, W.C. 2, and
62, Saint Vincent Street, Glasgow,
Agents for the Applicant.

[This Drawing is a reproduction of the Original on a reduced scale.]

Fig 1

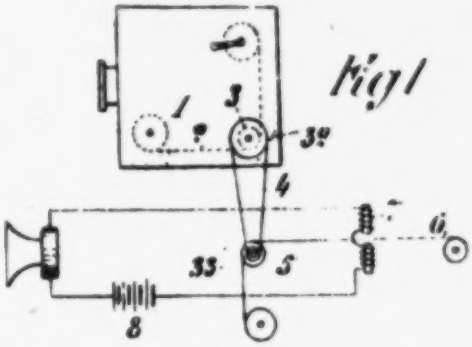

Fig 3.

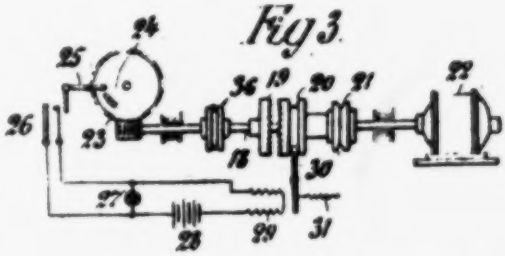

Fig 2.

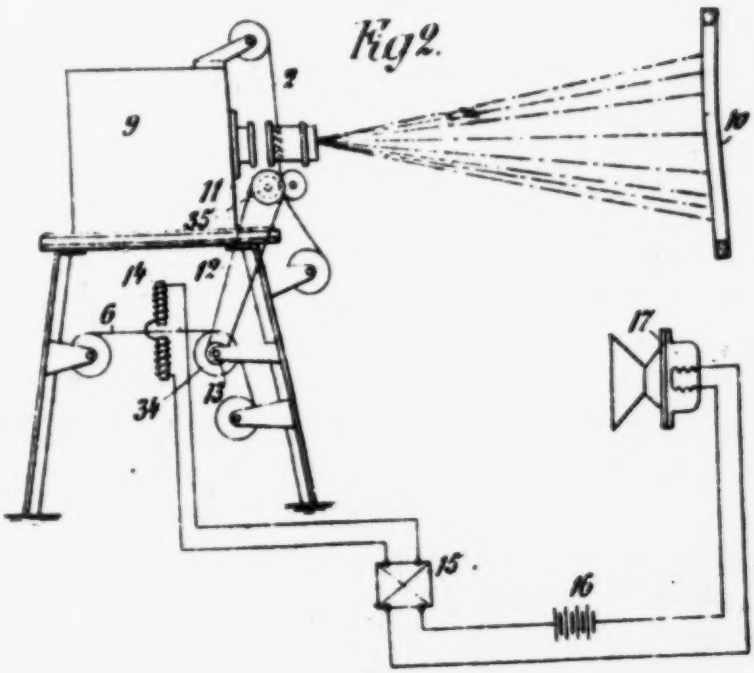

B. K. & T. BROWN.

PROCESS OF PRODUCING KINEMATOGRAPH FILMS.

APPLICATION FILED NOV. 6, 1907.

1,034,192.

Patented July 30, 1912.

4 SHEETS—SHEET 1.

Fig. 1.

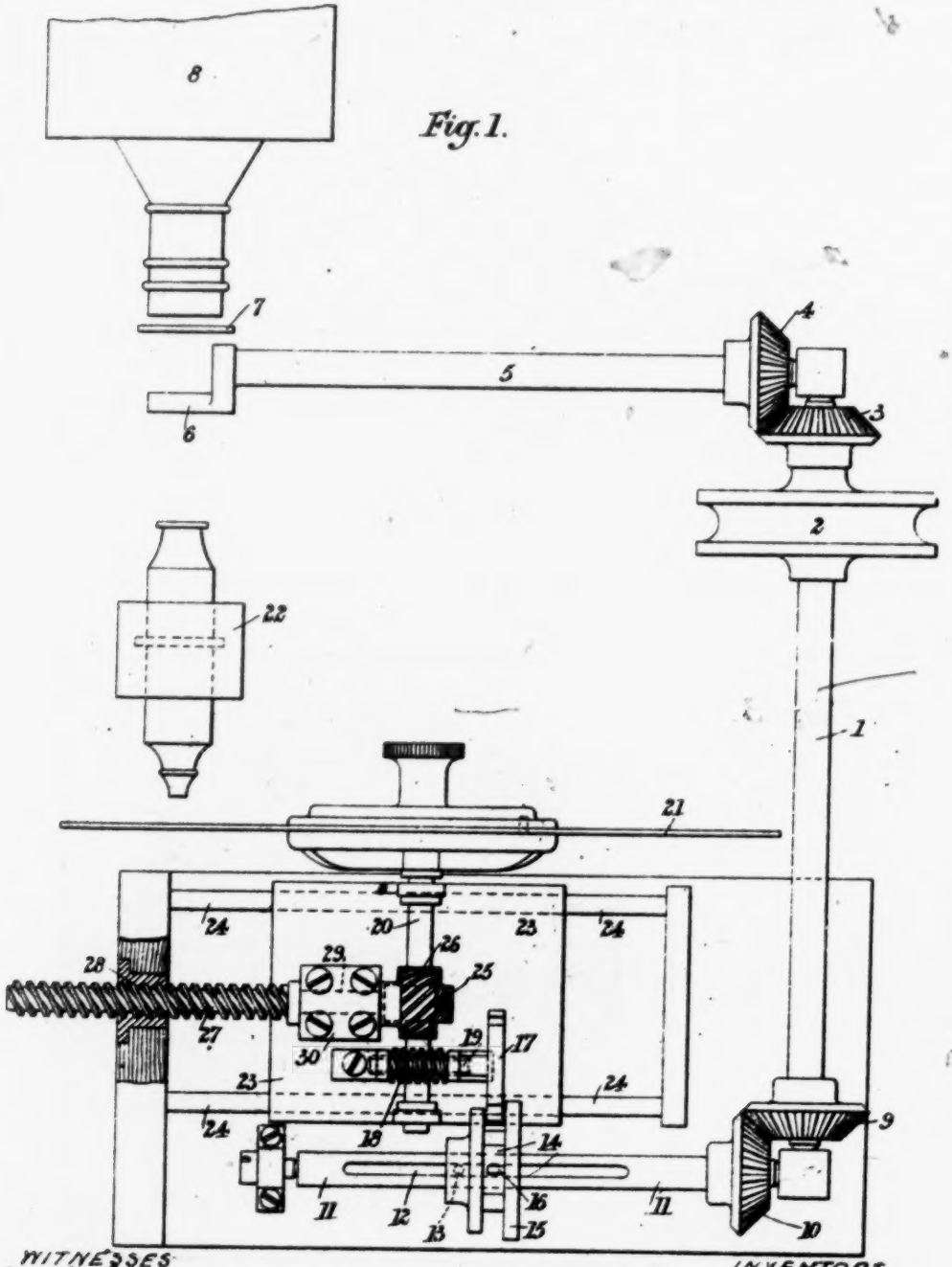

WITNESSES.
L. H. Grote
M. E. Keis

INVENTORS
Bessie Nate Brown.
Theodore Brown.
by Howson and Howson
Attys

B. K. & T. BROWN.

PROCESS OF PRODUCING KINEMATOGRAPH FILMS.

APPLICATION FILED NOV. 8, 1907.

1,034,192. Patented July 30, 1912

4 SHEETS-SHEET 2

Fig. 2.

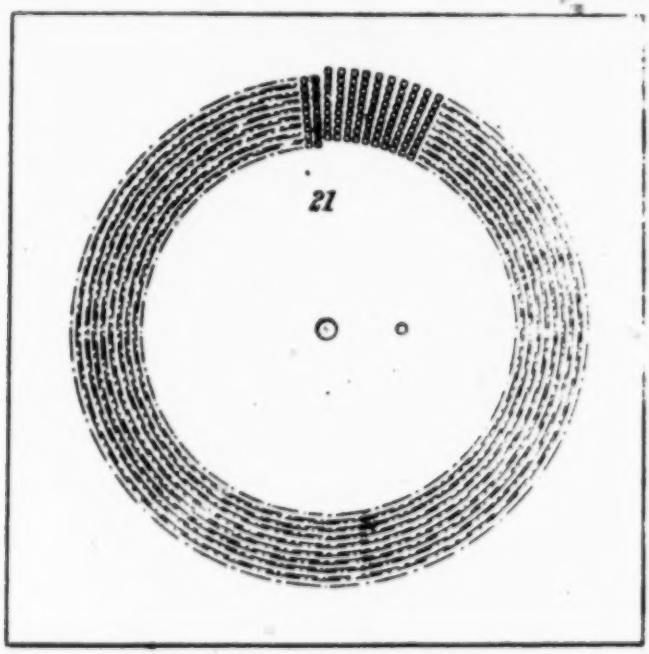

Fig. 3.

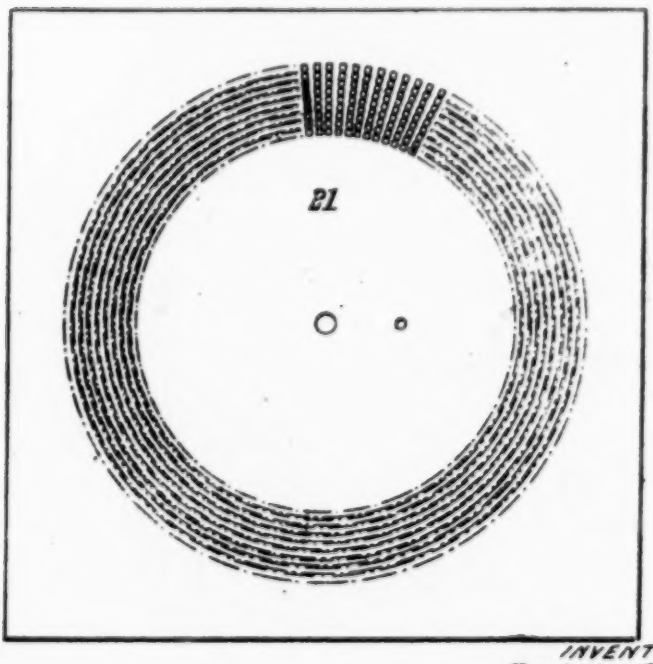

WITNESSES
L. H. Grote
M. E. Iles

INVENTORS
Bessie Nate Brown
Theodore Brown
by Howson and Howson
attys

B. K. & T. BROWN.

PROCESS OF PRODUCING KINEMATOGRAPH FILMS.

APPLICATION FILED NOV. 8, 1907.

1,034,192.

Patented July 30, 1912.

4 SHEETS—SHEET 3.

Fig. 4.

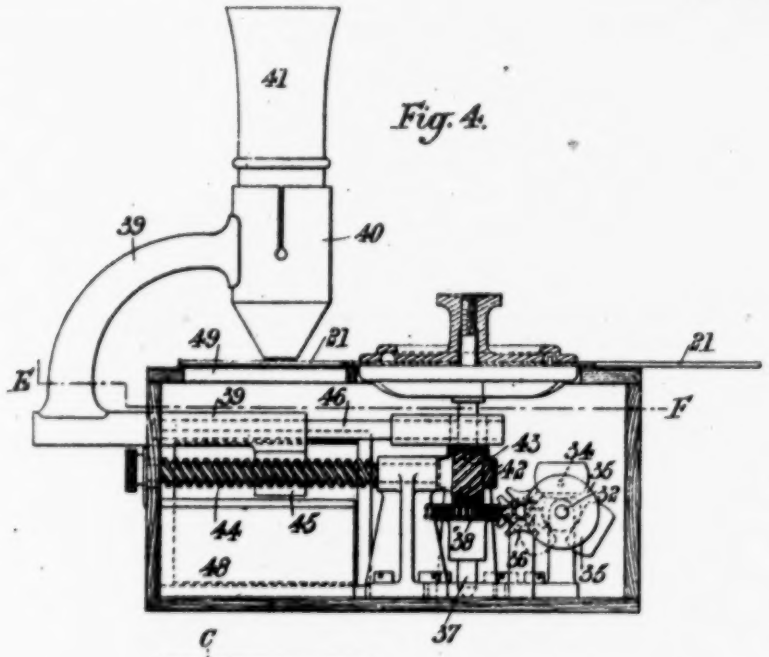

Fig. 6.

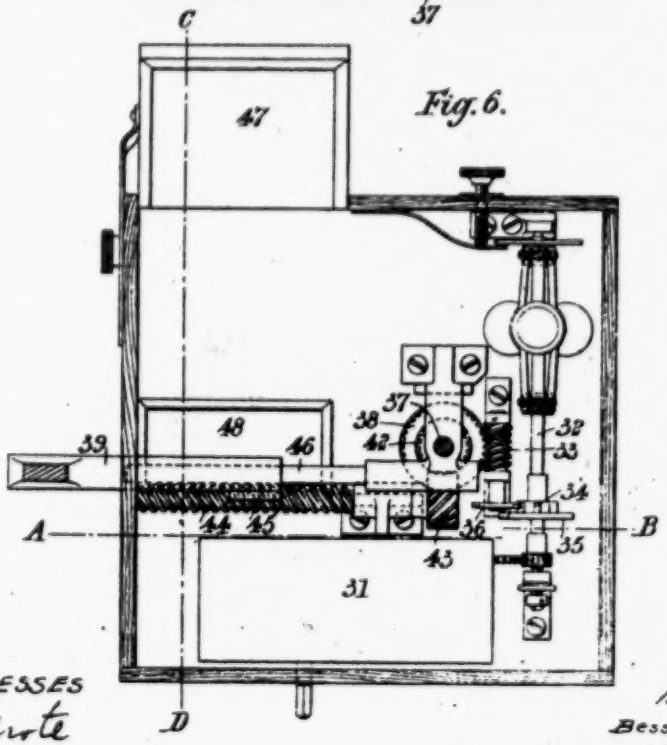

WITNESSES

L. H. Grote

M. E. Kerr

INVENTORS

Bessie Kate Brown

Theodore Brown

by Howson and Howson

Attys

B. K. & T. BROWN.

PROCESS OF PRODUCING KINEMATOGRAPH FILMS.

APPLICATION FILED NOV. 8, 1907.

1,034,192.

Patented July 30, 1912.

3 SHEETS—SHEET 4.

Fig. 5.

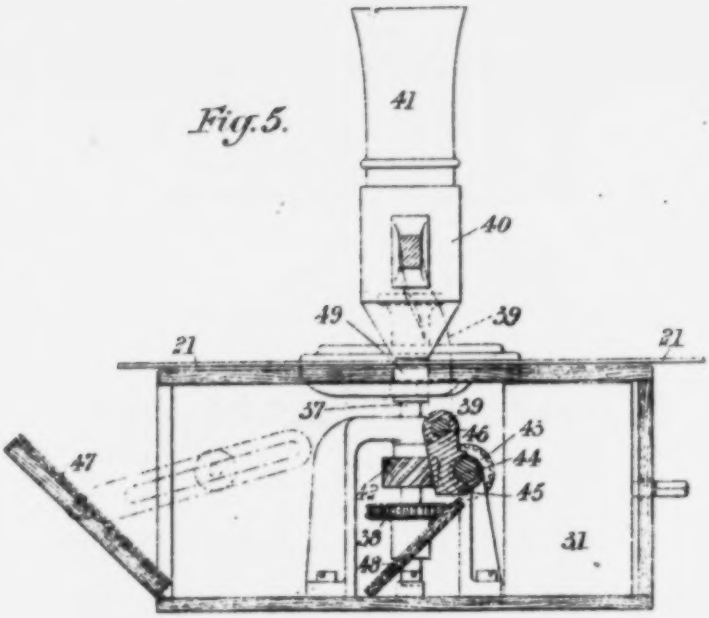

WITNESSES

L. H. Grote

M. E. Lees

INVENTORS

Bessie Kate Brown.

Theodore Brown.

by Howson and Howson.

Attys.

UNITED STATES PATENT OFFICE.

BESSIE KATE BROWN AND THEODORE BROWN, OF BRIXTON, LONDON, ENGLAND, ASSIGNORS TO CHARLES URBAN, OF LONDON, ENGLAND.

PROCESS OF PRODUCING KINEMATOGRAPH-FILMS.

1,034,192. Specification of Letters Patent. Patented July 30, 1912.

Application filed November 8, 1907. Serial No. 401,961.

To all whom it may concern:

Be it known that we, BESSIE KATE BROWN, lady, a subject of the King of Great Britain and Ireland, and THEODORE BROWN, editor, a subject of the King of Great Britain and Ireland, both of 8 Villa road, Brixton, London, England, and whose post-office address is 8 Villa road, Brixton, London, S. W., have invented new and useful Improvements in Processes of Producing Kinematograph-Films, of which the following is a specification.

This invention relates to the production of photographic images of reduced magnitude from ordinary kinematograph film pictures, and the said reduced images being received upon suitable sensitive medium in series corresponding approximately with any series of pictures on an ordinary kinematograph film, and the said reduced pictures, or prints therefrom, being more especially adapted for use in a small exhibiting apparatus for direct vision by individuals, although they may be used for exhibition by projection on a screen. Provision is made for photographing the said reduced images in series from ordinary kinematograph films so as to form either a spiral series, or in two, or more, spiral series, or a series in a ring, or in series in concentric rings. Several entirely different subjects may follow each other in any one series of pictures, when arranged in spiral order; or when the pictures are arranged in rings, or in two, or more, spiral series, each ring, or spiral, may be occupied by pictures devoted to one subject only, or one subject may be continued throughout all the rings, or spirals, or any required number, or portion, of them.

The method of obtaining the aforesaid reduced kinematographic pictures according to this invention is indirect, they not being photographed direct from nature, but being photographed on a reduced scale, from either negative, or positive, images, previously taken by an ordinary kinematograph camera, or by means of the standard film printer. To effect this, an ordinary kinematograph picture film is passed through an ordinary kinematograph projector and lantern, or kinematograph camera, and at a suitable distance from the said kinematograph projector, and lantern, or kinematograph camera, is mounted a microscope, with the eye-piece thereof facing the gate of the kinematograph projector and lantern, or kinematograph camera, and with its optical axis in a line with the center of each picture, and at right angles thereto, when it is presented to be copied. At the opposite end of the microscope, and near to the objective lens thereof, is situated the sensitized plate, or film, upon which the reduced pictures are to be received. The reduced pictures are preferably obtained on the said plate, or film, in the form of a spiral series by intermittently revolving the plate, or film, one picture space forward, and at the same time moving it radially; such movement being made while the projecting illuminant, or the day-light, is shut off from the microscope, by the intervening shutter of the kinematograph. While the said movement of the disk is being accomplished, the corresponding movement of the ordinary kinematograph film through the kinematograph projector and lantern, or kinematograph camera, is also accomplished.

To obtain the series of reduced pictures in the form of concentric rings, instead of a spiral, the disk is moved radially only upon the completion of each ring of pictures. The sensitive emulsion upon which the reduced images are photographed, is of a structureless nature, such, for instance, as collodion emulsion, or the emulsions employed for process plates, or films. This invention therefore especially consists in utilizing any ordinary negative, or positive, series of kinematograph pictures as originals from which to make reduced copies upon an emulsion, such as those aforesaid, which emulsions are of a character adapted to receive the details of the reduced pictures, but which, on account of their being but slowly affected by light, are not adapted for use in photographing moving subjects direct from nature. Thus, although the ordinary kinematograph film pictures from which the reduced copies are made, may consist of a series taken at the usual rate of say sixteen pictures every one second of time, in taking the reduced pictures according to this invention, the time during which each of such pictures in a series is allowed to remain stationary for the purpose of copying it onto the plate, or film, sensitized with an emulsion of the character aforesaid, can be prolonged to the requisite extent. The reduced pictures thus form records, which, or

(if they be negatives) positives taken therefrom, can be viewed through a microscope, or projected onto a screen, while each successive picture in a series is, by suitable mechanical means, brought into its proper position for exhibition, the speed at which the successive pictures are presented to the observer corresponding approximately with the speed at which the original kinematograph pictures were photographed.

We will now describe apparatus adapted for the purposes of this invention, premising that we do not limit ourselves to the precise constructions illustrated.

Figure 1 is a plan of apparatus adapted for taking the reduced series of copies of pictures from a series of ordinary kinematograph pictures.

Rotary motion is imparted by any suitable means (such as a band passing over the pulley 2) to a shaft 1, which motion is transmitted by bevel wheels 3 and 4 to a shaft 5 carrying a crank 6, which brings the ordinary kinematograph pictures on the film 7 successively in front of the lens of the projector, or camera, 8. The said shaft 1 also drives, through the bevel wheels 9 and 10, the shaft 11, having in it a slot 12, with which engages a pin 13, carried by a boss 14, provided with a disk 15 carrying a pin 16, which engages with a notch of the Maltese cross 17 secured to the worm-shaft 18, so as to impart motion of partial rotation at the requisite times (corresponding to the operation of the crank 6 on the film 7) through the worm-wheel 19 to the shaft 20, carrying the sensitised plate, or film, 21, between which, and the optical axis of the projector, or camera, 8 is mounted a microscope 22.

The shaft 20 is mounted in bearings on a carriage 23, running on rails, or rods, 24, and longitudinally moved intermittently by a worm-wheel 25, on the shaft 20, engaging a similar wheel 26, secured to a screw 27. One end of the screw 27 passes through a nut 28 in the frame of the apparatus and a part 29 of the screw 27 engages in a recess in the projection, or bearing, 30, so that the carriage 23 moves longitudinally on the rails, or rods, 24, when the screw 27 is rotated. The slotted connection of the boss 14 with the shaft 11 enables the said boss to follow the table in its motion to maintain the driving position of the pin 16 and Maltese cross 17.

The combined radial and rotary movement of the plate, or film, 21, effected as aforesaid before each successive copy is taken thereon, causes the reduced pictures to be taken in a spiral series on the said plate, or film. Thus, from ordinary kinematograph negative, or positive films, reduced negative, or positive, pictures can be taken upon glass, or any other suitable material, and with any time of exposure required by the particular sensitizing material used, which is of a character adapted to receive the very fine details of the reduced pictures, whereas the sensitized material necessary for the very rapid exposures in taking photographs direct from moving objects is of a grain, or character, not adapted to receive such fine details.

The plate, or film, 21 is, of course, inclosed in a casing, or otherwise protected from access of actinic rays, except those which pass through the microscope 22.

Fig. 2 is a face view of a plate, or film, having the reduced photographs in a spiral form.

Fig. 3 shows a plate, or film, with the reduced photographs in concentric rings, which will, of course, be produced by imparting radial movement to the disk carrier only after each circle of photographs is completed. The plates, or films, are shown square and are presumed to be negatives, from which positives will be printed, and these positives can be cut into disk form.

Figs. 4, 5 and 6 are views showing a construction of apparatus adapted to exhibit kinematograph pictures taken as aforesaid or usually positives taken from negative pictures produced as aforesaid, Fig. 4 being a longitudinal sectional elevation on the line A B Fig. 6, Fig. 5 a transverse sectional elevation on the line C D Fig. 6, and Fig. 6 a horizontal section on the line E F Fig. 4.

We explain this exhibiting apparatus in order to show a means by which our invention can be utilized in exhibiting, although this exhibiting apparatus is not claimed in the present application.

Rotary motion is imparted, from clockwork mechanism contained in the casing 31, to the shaft 32 (shown as being provided with a governor and brake for regulating the speed) and from this intermittent motion of partial rotation is transmitted to a worm-shaft 33, by means of a pin 34, on a disk 35, secured to the shaft 32, the said pin engaging at each rotation a notch in the Maltese cross 36 secured to the worm-shaft 33. This intermittent motion of partial rotation is transmitted from the worm 33 to the shaft 37 by the worm-wheel 38. The shaft 37 carries the disk 21 of reduced pictures in any suitable way. An arm, or bracket, 39 carrier, in a socket 40, a microscope 41, which is caused to intermittently move longitudinally (as each picture on the disk is presented) by means of a worm-wheel 42, fixed to the vertical spindle 37 and engaging with a similar wheel 43, secured on the end of a screw 44, with which engages a nut, or preferably a half nut, 45, secured to the bracket, or arm, 39. The said bracket, or arm, is mounted on a guide-rod 46, upon which it can slide, and, if a half nut be used at 45, the said bracket, or arm, can be turned

to fold the said arm down (or it can be detached from the apparatus) for packing. A mirror 47, or mirrors, may be employed for directing light through an opening in the casing to another mirror 48, or mirrors, from which the light is directed through an aperture 49 to the underside of the disk 21. The mirrors are shown flat, but they may be of any other desired shape such, for instance, as to condense the light onto the pictures.

In order that the pictures may be satisfactorily reproduced, the pitch of the screws 27, and 44, the pitch of the worms 18, and 33, and the pitch of the worm-wheels 19, and 38, and their engaging gears respectively, should be identical both in the taking and exhibiting apparatus.

If the pictures on the disk 21 be arranged in concentric rings, instead of in a spiral, or in spirals, the radial movements of the microscope will of course be made to take place only after each series of pictures forming a ring has been exhibited.

When the pictures are in a ring, they may be viewed repeatedly, the subject of course being repeated at each revolution of the ring.

It will be understood that two, or more, series of pictures may be arranged spirally on the plate, or film, instead of in concentric rings, in which case the spirals would be arranged the one within the other.

Having now particularly described and ascertained the nature of our said invention and in what manner the same is to be performed, we declare that what we claim is:—

In the process of producing a kinematographic film, the exposure of a slow acting light sensitive film to the reduced images of an ordinary kinematographic series as photographed from life on an ordinary quick acting light sensitive film, whereby a reduced image containing substantially all the details of the latter is secured, substantially as and for the purpose described.

In testimony whereof we have signed our names to this specification in the presence of two subscribing witnesses.

BESSIE KATE BROWN.
THEODORE BROWN.

Witnesses:
GILBERT FLETCHER TYSON,
WILLIAM GERALD REYNOLDS.

P. ULYSSE.

NATURAL COLOR CINEMATOGRAPHY.

APPLICATION FILED JAN. 19, 1914.

1,161,910. Patented Nov. 30, 1915.

2 SHEETS—SHEET 1.

Fig. 1

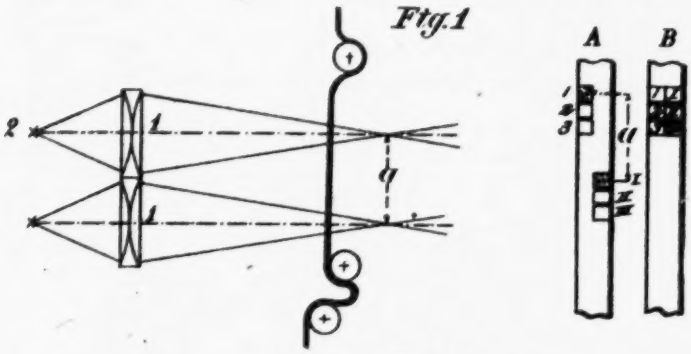

Fig. 2

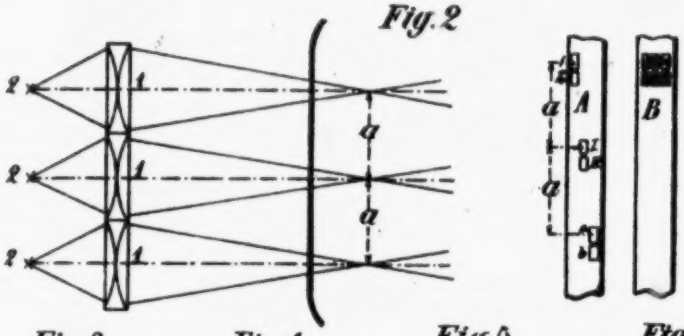

Fig. 3

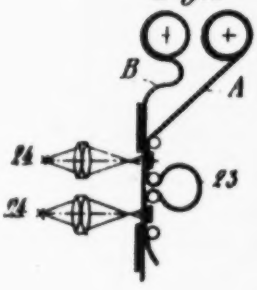

Fig. 4

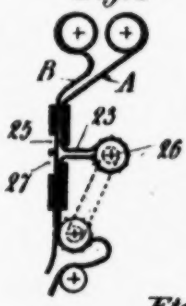

Fig. 5

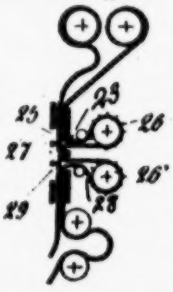

Fig. 6

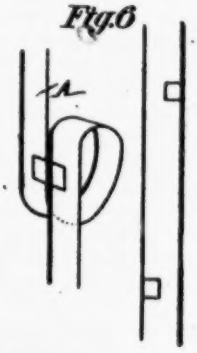

Fig. 7

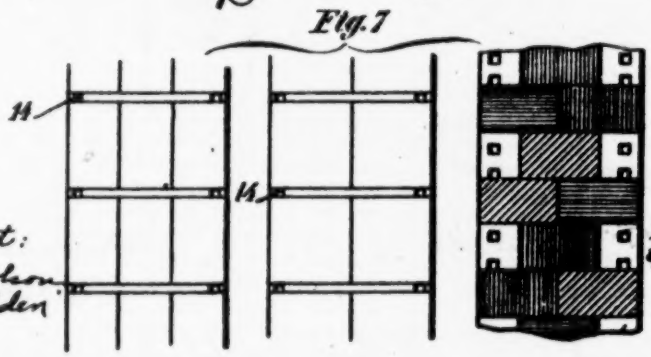

Attest:
Edw. L. Tolson
H. L. Alden

Inventor:
Pierre Ulysse,
by Jean Nicolet
Arnaldson & Spear
Attys.

P. ULYSSE.

NATURAL COLOR CINEMATOGRAPHY.

APPLICATION FILED JAN. 19, 1914.

1,161,910.

Patented Nov. 30, 1915.

2 SHEETS—SHEET 2.

Fig.9

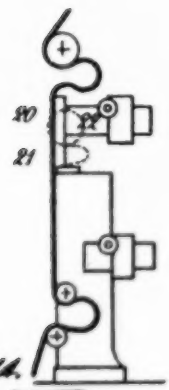

Fig.10

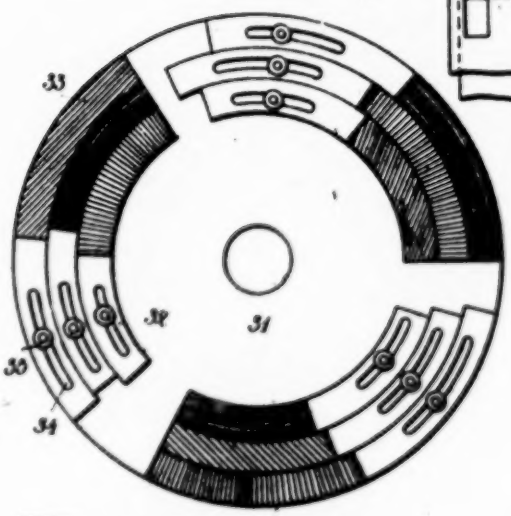

Fig.13.

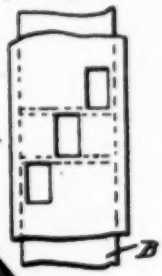

Fig.14.

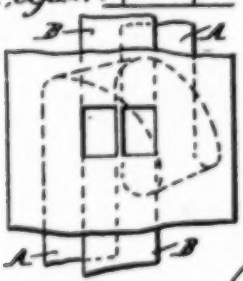

Fig.11.

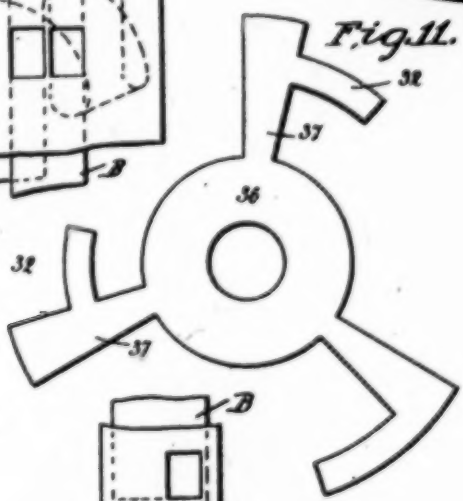

Fig.8

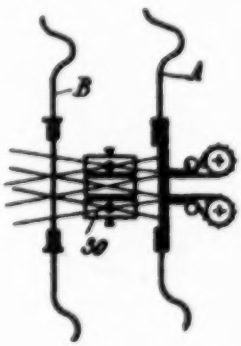

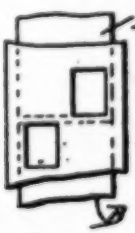

Fig.12.

Attest;

Edwd. L. Tolman

H. L. Alden

Inventor;

Pierre Ulysse,

by Pierce Middleton Donaldson & Pierce

Attys.

UNITED STATES PATENT OFFICE.

PIERRE ULYSSE, OF MARSEILLE, FRANCE.

NATURAL-COLOR CINEMATOGRAPHY.

1,161,910. Specification of Letters Patent. Patented Nov. 30, 1915.

Application filed January 19, 1914. Serial No. 813,008.

To all whom it may concern:

Be it known that I, PIERRE ULYSSE, a citizen of the French Republic, residing in Marseille, France, have invented certain new and useful Improvements in Natural-Color Cinematography, of which the following is a specification.

The present invention relates to a printing device by which a positive film with n selected images having a longitudinal and lateral displacement can be obtained from a negative film with n selected images grouped on the area of an ordinary black and white image. The simultaneous illumination of the n selected images by n luminous sources enables the amount of light received to be regulated according to the color of the selecting screen interposed; it further enables the relative values of the colors in the various selected images to be made the same as in the corresponding image in natural colors. However the distance between the axes of the selected images of reduced dimensions renders it impossible to place side by side several distinct luminous sources.

In the present invention the displacement of the selected images on a positive film enables the said images to be placed at distances equal to those separating the luminous sources; these distances can be as large as is necessary. Owing to the distance between the centers of the projecting lenses it is possible to use lenses of a larger relative aperture and longer focal length and to place them in ordinary cylindrical fittings with an ordinary iris diaphragm.

In the accompanying drawings given by way of example: Figures 1 and 2 show, for a two-color film and for a three-color film, the arrangements by means of which it is possible to obtain, in accordance with the invention, the illumination of two or three selected images which must be superposed on the observation-screen for reconstructing the image in natural colors; the films A and B represent in each case the positive and negative films obtained for the purpose of making possible the illumination of the selected images according to the invention. Figs. 3–5 show diagrammatically printing devices, by means of which it is possible to obtain, with negatives such as B in which the n selected images are grouped on the surface of an ordinary black-and-white image, such positives as A, in which the n images are situated on the film at distances corresponding respectively to those separating the luminous projection sources. Fig. 6 is another modification of the printing device. Fig. 7 shows a number of films obtained by the application of the means shown in Fig. 6, the selected images occupying in this case the whole width of the film. Fig. 8 is another modified construction of the printing device. Fig. 9 shows diagrammatically modifications to be made in an ordinary projecting apparatus to use the films shown in Figs. 1, 2 and 7. Figs 10 and 11 show the means used for varying the time of exposure in accordance with the color of the filter and the value of the luminous absorption produced by the latter. Figs. 12, 13 and 14 are diagrams showing the position of the windows of the printing devices of Figs. 4, 5, and 6 respectively.

In accordance with the present invention, for the purpose of enabling the n selected images, the superposition of which on the observation screen reproduces the image in natural colors to be uniformly lighted, the said images (the dimensions of which are such that the surface of the n selected images should be at the outside equal to that of an image of an ordinary black-and-white film) are distributed on the film in such a manner that their distances correspond to the distance required for the arrangement of distinct luminous sources and the corresponding condensers. This makes it possible to use luminous sources of different power for lighting the n selected images. In that way, if as an example the case of a two-color selection is taken, it will be seen that if a (Fig. 1) indicates the vertical height which separates the axes of the projecting systems constituted by each luminous source, each condenser and each projecting lens, the corresponding images on the film, which must be projected simultaneously will also be separated by a distance equal to a. The difference in the distribution of the selected images on the negative film B obtained in the usual manner, and on the positive film A, can be readily seen in the case illustrated. The negative film B comprises, in the surface corresponding to that of an ordinary image in black, two selected images I and II, taken at the same moment, while the corresponding images I II on the positive film A are at a distance equal to a. These

selected images will be simultaneously projected and must coincide on the observation screen. The same would be the case with three-color selection. The three selected images occupying the surface of an ordinary image in the negative B, are separated on the positive, by the distance *a* separating the axes of the three luminous sources 2 and of the corresponding condensers 1.

In order to obtain a film with selected images, in which the *n* selected images are separated on the film by a distance equal to that separating the principal axes of the optical projection systems 2, 1, the following device could be used: The negative B (Figs. 1 and 2) is obtained in the usual manner, that is to say, the *n* selected images I, II . . . which are taken simultaneously are grouped in the surface corresponding to that of an ordinary black-and-white image. Behind the negative B is placed the film A which must be printed upon in order to form the positive film (Fig. 3), the said film forming one or more loops 23 between the portions of the film which are applied behind the negative and intended to receive the corresponding selected images. The loop 23 has a length equal to *a*, the distance between the axes of the projecting systems, so that when the film is unfolded, it is easy to see that the images I, II . . . simultaneously taken, are separated by a distance equal to the length *a* (Figs. 1 and 2). The positive and negative films are naturally given similar periodical movements.

It may be seen in Fig. 3 that the printing apparatus does not differ from similar known apparatus, except by the increased length of its printing aperture, for the purpose of providing it with the two windows through which appear the portions of the film to be printed, these windows and these superposed surfaces, in the construction illustrated, are lighted by distinct luminous sources, for instance Nernst lamps 24.

In practice, in order to obtain the positive images printed in a device similar to that shown in Fig. 3, as near together as possible, the arrangements shown in Fig. 4 (two colors) and in Fig. 5 (three colors) are used. In these printing devices, the positive film A', after having passed in front of the window 25, passes through a narrow slot made in the rear wall of the passage (Fig. 4). Its direction is changed so that it is brought at a right angle to the plane of the passage and passes over a driving drum 26 (Maltese cross or cog wheel) controlled by the unwinding mechanism. The film is then brought parallel to itself in order to enter the passage of the film through the same slot, or through another slot made in the bottom of the passage. The film thus passes in front of the second window 27, the part of the film situated outside the passage and passing over the drum 26, constituting the loop, having a length equal to *a*, which separates two selected images taken simultaneously through the windows 25, 27.

When it is necessary to take simultaneously three selected images, the film, after having formed a first loop 23, as in the preceding case, travels in front of the window 27 and enters a slot of the passage, enabling a second loop 28 to be formed, which embraces and drives the drum 26'. The film, on again entering the passage of the printing device, passes in front of a third window 29. Although the selected images are thus separated on the film, to the length of the loop 23, 28 separating the same, it will be seen that the points of view of the *n* images simultaneously taken, are as near together as possible, which avoids any deformation and consequently cannot affect the superposition of the selected images on the observation screen. Moreover, instead of bringing back the upper and lower parts of the film in line with each other in the same passage of the apparatus (Figs. 4 and 5) the loop 23 can be formed so that the said parts are parallel to each other and placed side by side in different passages of the printing device (Fig. 6). The example in Fig. 6 shows that it is advantageous, for the purpose of bringing the points of view nearer together, to extend the images to the very edges of the film. In that way the films are obtained which differ from those hitherto used by the selected images occupying the whole width of the film, instead of being comprised as usual, between the marginal driving perforations. The perforations are then situated between the groups of *n* images (Fig. 7) or, according to the arrangement of the latter, in the part of the film which the *n* images do not cover. The use of printing devices forming loops on the positive can however be avoided, by using special means during the taking, so as to obtain a negative directly, the *n* images of which, taken simultaneously, are arranged at a certain distance from each other as shown in the case of the positive A (Figs. 1 and 2). To that end, it is sufficient to cause the negative film to make a loop in the camera similar to that which the positive makes in the printing device. The positive is then printed by ordinary means.

For the purpose of projecting, an apparatus for black-and-white cinematography may be used, since the film with displaced images has the same amplitude of unwinding as an ordinary film. It is simply sufficient to add to this apparatus guiding windows and additional lenses which must be separated from each other and from the ordinary lens with which the apparatus is provided, by the distance

separating the axes of the selected images which have to be projected simultaneously. As shown in Fig. 9 for the case of projection in two colors, it is sufficient to remove from the ordinary projecting apparatus the upper drum 20 supporting the film, and to replace it by a support 21. This support forms an extension of the passage of the apparatus and has one or more windows with the corresponding lenses. The drum receiving the film is simply put on and secured above the auxiliary support.

In order to insure, without it being necessary to set the lenses, perfect superposition of the selected images on the observation screen when subjects situated in very different planes (1 and 10 meters for instance) are projected, lenses 30 are inserted between the negative B and the unexposed positive film A. The images are therefore not printed by contact, but projected from the negative on to the sensitive film. To that end, the negative B and its passage are situated at a certain distance from the positive A and from its unwinding and guiding device (Fig. 8). Between the latter are inserted object glasses 30 which can be adjusted in every direction.

Before introducing the unexposed film A into the printing device, the negative B is caused to travel in the apparatus and, by means of the lenses 30 which can be suitably adjusted, superposition of negative images thus projected on to an observation screen placed at a suitable distance, is insured. When this superposition is obtained, the lenses 30 are locked in the relative positions which they occupy, the film A is introduced into the apparatus, and in front of the negative B, the projecting lamp is replaced by the luminous source generally used for printing films. The selected images are then projected from the negative B on to the film A, so that when the film thus obtained is introduced into the projecting apparatus, there is a certainty that an exact superposition of the selected images will be obtained on the observation screen, and consequently faithful reproduction of the animated image in its natural colors.

It will be understood that, by using the preceding means, it is possible, by previous adjustment of the lenses 30 belonging to the printing apparatus, to obtain a positive, the selected images of which will coincide exactly on the observation screen, without it being necessary to modify the setting of the lenses, whatever be the distance of the subject from the apparatus for taking the views.

Referring to Figs. 4 and 5, the windows 25, 27, 29 are so arranged that an oblique row of negative images is printed simultaneously—for instance the images (1, II), (2, III); (3, IV), etc., in the two-color film, and the images (1, II, *c*), (2 III, *d*), etc., in the three color film. The loops 23, or 23 and 28, must therefore be so adjusted that the widely separated positive images corresponding to a lateral row (2, II), or (2, II, *b*)—that is, to a simultaneously-taken set—will be separated by the distance *a*. In this way it is insured that the *n* simultaneously taken positive images are also simultaneously projected. The diagonal arrangement of the printing windows in these two cases is shown in Figs. 12 and 13, the looped film being shown in dotted lines. Fig. 14 is a similar view showing that when the film is looped as in Fig. 6, there is no need to arrange the windows diagonally. The windows 25, 27, 29 may also be arranged so that any other oblique row of negative images is printed simultaneously, for instance (1, III), (2, IV), etc., in the two-color film, and (1, III, *e*) (2, IV, *f*), etc., in the three-color film.

As stated above, it is necessary for obtaining a correct reproduction of the colors, not only to light the selected images by luminous beams the intensity of which depends on the color of the selecting filter (which is obtained by the preceding means) but also to take into account the difference of sensitiveness of the emulsion to different colors passing through the said screens. As the sensitiveness of the film cannot be modified, the time of exposure of the various selected images is modified in accordance with the relative sensitiveness of the emulsion to light of the corresponding color. To that end, on the rotary shutter 31 (Fig. 10) which supports in the known manner the color-filters are arranged adjustable shutter-leaves 32 which enable the length of each of the colored segments 33 to be modified relatively to those with which they coöperate. In order to shift the said shutter-leaves 32 and to modify the useful length of each screen 33 and therefore the time of exposure, of the corresponding selected images, the said segment-shaped leaves are provided with grooves 34 which slide on screw-threaded pins provided with locking nuts 35 enabling them to be locked in the relative positions which they occupy after the regulation. When the rotary shutter 31 carries several series of colored screens, the distributions of which can be identical or different, it is preferable to arrange the shutter-leaves 32 regulating in each group the length of the filters of the same color, so that they are simultaneously given equal angular movements. To that end, the segment-shaped shutter-leaves 32 corresponding to the filters 33 of the same color, can be supported by arms 37 arranged radially around a central hub 36. The angular movement of the whole of this, relatively to the shutter 31 and to the filters supported by the latter, thus enables the time of exposure

of the image to be varied to a corresponding extent, for the purpose of compensating for the differences in sensitiveness of the emulsion to light of various colors.

What I claim as my invention and desire to secure by Letters Patent is:—

1. An apparatus for printing positive cinematograph films from negative films having a plurality of selected images grouped on each standard picture-area, comprising passages adapted to guide the positive and negative films, means comprising sprocket wheels for driving said films, means for maintaining a loop in the positive film, windows in said passages adapted to expose parts of the films adjacent either end of said loop, whereby images can be printed wide apart on the positive film from images close together on the negative film.

2. An apparatus for printing positive cinematograph films from negative films having a plurality of selected images grouped on each standard picture-area, comprising passages adapted to guide the positive and negative films, means comprising sprocket wheels for driving said films, means for maintaining a plurality of loops in the positive film, windows in said passages adapted to expose parts of the films adjacent either end of each loop, whereby images can be printed wide apart on the positive film from images close together on the negative film.

3. An apparatus for printing positive cinematograph films from negative films having a plurality of selected images grouped on each standard picture-area, comprising separate passages adapted to guide the positive and negative films, means comprising sprocket wheels for driving said films, means for maintaining a loop in the positive film, windows in said passages adapted to expose parts of the positive film adjacent either end of said loop, lenses situated between the two films adapted to project the images on the negative film on to the positive film, and means for adjusting said lenses to correct parallax error introduced during the taking of the negative images, for the purpose described.

4. An apparatus for printing positive cinematograph films from negative films having a plurality of selected images grouped on each standard picture-area, comprising separate passages adapted to guide the positive and negative films, means comprising sprocket wheels for driving said films, means for maintaining a plurality of loops in the positive film, windows in said passages adapted to expose parts of the positive film adjacent either end of each loop, lenses situated between the two films adapted to project the images on the negative film on to the positive film, and means for adjusting said lenses to correct parallax error introduced during the taking of the negative images, for the purpose described.

5. An apparatus for printing positive cinematograph films from negative films having a plurality of selected images grouped on each standard picture-area, comprising passages adapted to guide the positive and negative films, means comprising sprocket wheels for driving said films, means for maintaining a loop in the positive film, windows in said passages adapted to expose parts of the film, said parts being normally separated by a distance equal to the length of the film comprising the loop, whereby images can be printed wide apart on the positive film from images close together on the negative film.

In testimony whereof I have signed my name to this specification in the presence of two subscribing witnesses.

PIERRE ULYSSE.

Witnesses:

LUCILE OUNDRY,

F. A. MATERNUTZ.

F. L. DYER & D. HOLDEN.

APPARATUS FOR PRINTING MOVING PICTURE FILMS.

APPLICATION FILED DEC. 21, 1906.

970,614.

Patented Sept. 20, 1910.

2 SHEETS—SHEET 2.

Fig. 4

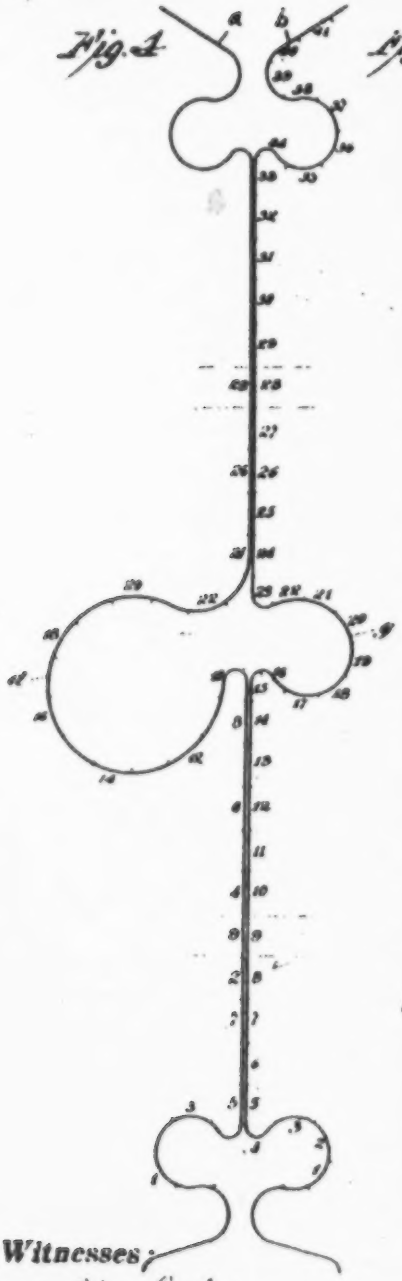

Fig. 5

Fig. 6

Witnesses:

Inventors

Attorney

F. L. DYER & D. HOLDEN.

APPARATUS FOR PRINTING MOVING PICTURE FILMS.

APPLICATION FILED DEC. 21, 1909.

970,614. Patented Sept. 20, 1910.

2 SHEETS—SHEET 1.

Fig. 1

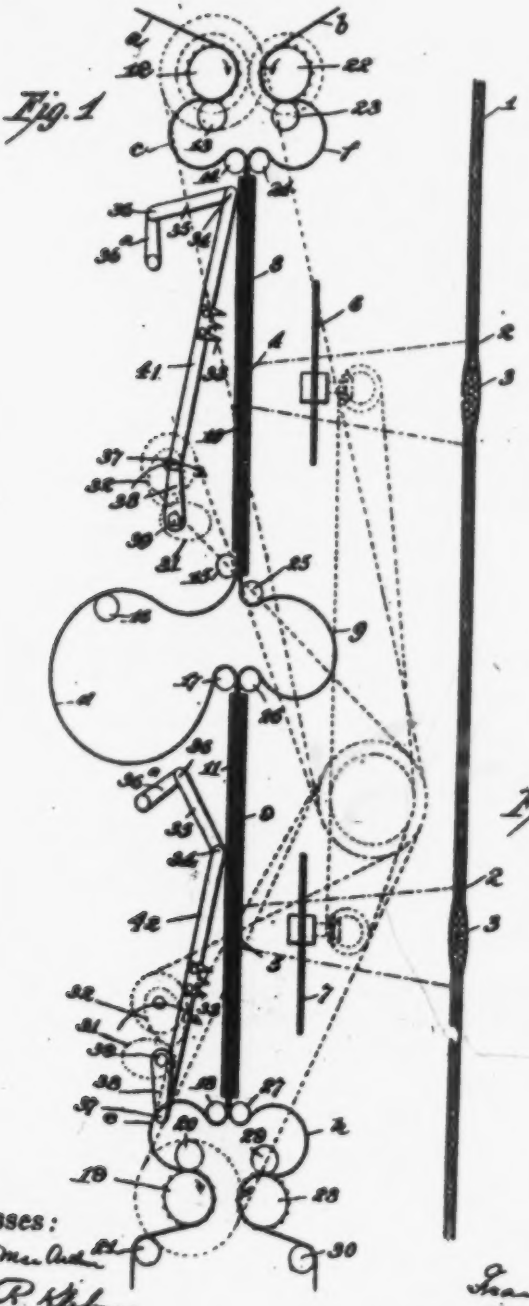

Fig. 2

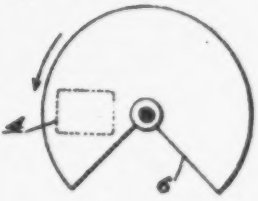

Fig. 3

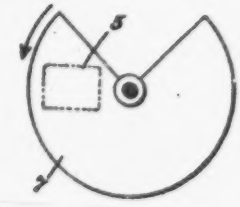

Witnesses:

Inventors

Frank L. Dyer.

Allen Holden

by Frank L. Dyer

Attorney

UNITED STATES PATENT OFFICE.

FRANK L. DYER, OF MONTCLAIR, AND DELOS HOLDEN, OF UPPER MONTCLAIR, NEW JERSEY, ASSIGNORS TO EDISON MANUFACTURING COMPANY, OF WEST ORANGE, NEW JERSEY, A CORPORATION OF NEW JERSEY.

APPARATUS FOR PRINTING MOVING-PICTURE FILMS.

970,614. Specification of Letters Patent. Patented Sept. 20, 1910.

Application filed December 21, 1906. Serial No. 349,236.

To all whom it may concern:

Be it known that we, FRANK L. DYER, a citizen of the United States, and a resident of Montclair, in the county of Essex and State of New Jersey, and DELOS HOLDEN, a citizen of the United States, and a resident of Upper Montclair, in the county of Essex and State of New Jersey, have invented certain new and useful Improvements in Apparatus for Printing Moving-Picture Films, of which the following is a description.

Our invention relates to apparatus for the production of a moving picture film characterized by the arrangement of the photographs in two arithmetical series the members of which alternate, and one series being shifted longitudinally of the film as regards the other series, so that the pictures do not follow each other on the film in regular numerical sequence but the photographs of one series are preceded by photographs of the other series which are representative of later phases of movement, whereby it becomes possible to exhibit the pictures of the two series in proper numerical order at separate display openings which are situated at some distance from each other, by intermittently moving the film at each opening in alternation a distance equal to the length of two adjacent pictures. The pictures of one series are all exhibited at one opening and the pictures of the other series at the other opening and there may be a continuous or uninterrupted exhibition of stationary photographs somewhat analogous to the exhibition of dissolving views and flickering entirely eliminated.

The present invention has for its object the provision of means whereby such positive moving picture films may be printed directly by the simple passage of the film through the apparatus from negatives having the usual arrangement of photographs in a continuous unbroken sequence.

In order that the invention may be better understood, attention is directed to the accompanying drawings forming part of this specification, and in which

Figure 1 is a vertical sectional view of an apparatus constructed in accordance with our invention; Figs. 2 and 3 are front views showing respectively the upper and lower shutters and exposure openings of Fig. 1; Fig. 4 is a diagrammatic view showing the relative positions of the negative and sensitive films as they are passed through the apparatus; and, Figs. 5 and 6 are detail views of fragments of the negative and positive films respectively the latter viewed from the back.

In all the views corresponding parts are designated by the same characters of reference.

Referring to Fig. 1 of the drawing, the printing machine will be situated in a dark room close to a wall 1 provided with a pair of openings 2, 2 which are closed by condensing lenses 3, 3 which receive the light from any suitable source and direct the same to the upper and lower exposure openings 4 and 5 respectively. In front of the opening 4 is a rotary shutter 6 and in front of the opening 5 is a similar shutter 7, said shutters being provided with cut-away portions as shown, of sufficient extent to enable a proper exposure to be made when continuously rotated in any suitable manner, as is well understood. The two shutters are shown as set with the cut-away portions 180 degrees apart, but this is immaterial, as the shutters may be set in any positions whatever so long as the cut-away portions cross the openings 4 and 5 during the periods of rest of the films at such openings. These periods of rest may occur either coincidently or in alteration at the two openings, but in the machine illustrated the said periods occur in alternation. The exposure openings 4 and 5 are formed in fixed plates 8 and 9 respectively. The sensitive and negative films *a* and *b* respectively pass directly behind the said openings, being suitably held by plates 10 and 11 which may be hinged along one edge if desired to permit the films to be readily threaded through the apparatus. The sensitive film passes from a suitable supply reel over a continuously operated sprocket 12 with which it is held in engagement by an idler 13 and forms a loop *c*, passing thence over an idler 14, thence between the plates 8 and 10, and then over the idlers 15 and 16 to form a loop *d*. This film then passes over an idler 17 thence between the plates 9 and 11 and over the idler 18 to form a loop *e*. It then passes over a continuously operated sprocket 19 with which it is held in engagement by the idler 20; thence over an idler 21 to a suitable take-up reel. The negative film *b*

passes from its supply reel over the continuously operated sprocket 22 with which it is held in engagement by the idler 23 and forms a loop *f*. It then passes over the idler 24 and between the plates 8 and 10; thence over an idler 25 to form a loop *g* which is of different length from the loop *d*, being either larger or smaller. The film *b* then passes over the idler 26 and between the plates 9 and 11 from which it passes over an idler 27 to form a loop *h*; thence over the continuously operated sprocket 28 with which it is held in engagement by an idler 29; thence over an idler 30 to a suitable take-up reel.

The film feeding mechanism comprises means for intermittently feeding the films at two exposure openings 4 and 5 and may be of any suitable type, that shown being illustrated in U. S. Patent No. 714,845 granted December 2, 1902 to James H. White, and comprises the two oscillating frames 41 and 42 having teeth 33 which pass through slots in the plates 10 and 11 respectively and engage the usual holes or perforations *i* provided along the edges of the films *a* and *b*, one end of each of said frames being pivoted at 34 to a link 35 which is pivotally supported at 36 by an oscillating arm 36ª and the other end of said frames 41 and 42 being pivoted at 37 to a crank 38 carried by a shaft 39, driven through the gears 31 and 32 by any suitable driving mechanism. The intermittent movement of the teeth 33 will carry the film at each engagement a distance equal to twice the height of the openings 4 and 5 and the films will be so threaded through the apparatus that different sections will be brought to rest and exposed at the openings 4 and 5, those which are brought to rest at the opening 4 being moved past the opening 5 without stopping, by the feed mechanism located at said opening, and vice versa those sections which are to be exposed at the opening 5 will be carried past the opening 4 without any exposure, so that the impressions produced by the light admitted by the shutters 6 and 7 respectively will fall upon distinct portions of the film *a*, said portions alternating with each other. Thus as shown in Fig. 4, the ninth picture of the negative is brought to rest at the lower exposure opening opposite a blank section of the film *a*, situated between sections upon which the second and fourth pictures of the negative have already been printed at the upper exposure opening. In this diagram, all the photographs of the negative which correspond to even numbers are printed at the upper exposure opening and all the photographs of the negative corresponding to odd numbers are printed at the lower exposure opening. The loop *g* of the negative film *b* is smaller than the loop *d* of the sensitive film *a*, thus producing a longitudinal shifting of one film with respect to the other between the upper and lower openings. It will be obvious that in case the intermittent feeding devices at the two openings 4 and 5 move simultaneously in the same direction the loop *g* may be dispensed with but the film *a* will still be provided with a loop *d* so that the relative shifting of the two series of pictures will be obtained.

5 shows the negative *b* of the usual type, the objects photographed being shown as a bird flying toward the left over a steeple and the photographs occur in a continuous, straight line, numerical sequence. Fig. 6 shows the positive which will be obtained from the said negative wherein the pictures are arranged in two arithmetical series the members of which alternate and in which one series is shifted so that its pictures are preceded by pictures of the other series which are representative of later phases of motion, as is clearly shown by the different positions of the bird.

The operation of the apparatus is as follows: The films *a* and *b* are threaded through the apparatus in a manner shown in Fig. 4 so that the odd numbered pictures of the negative will be printed at the lower exposure opening and the even numbered pictures at the upper exposure opening. The two films are moved together by the teeth 33 alternately at each opening a distance equal to twice the height of the said openings, the periods of rest occurring during the interval when the cut-away portions of the shutters 6 and 7 permit the light to fall upon said openings, and the result is that the impressions received upon the film *a* at the opening 4 will be separated by blank spaces, which spaces will be filled in at the opening 5 and by reason of the loop *g* being of different size from the loop *d*, the pictures of one series, that is, those printed at one opening, will be preceded by pictures printed at the other opening which are representative of later phases of movement.

Having now described our invention, what we claim as new and desire to secure by Letters Patent is as follows:—

1. In a photographic printing apparatus, the combination with a frame having a pair of exposure openings of means for feeding a negative and a sensitive film together across said openings, and means for causing the said negative and sensitive films to follow paths of unequal length between said pair of exposure openings, whereby one film is shifted longitudinally with respect to the other film between the two openings, substantially as set forth.

2. In a photographic printing apparatus, the combination with a frame having a pair of exposure openings of means for feeding a negative and a sensitive film together across

said openings and intermittently bringing the same to rest at each opening, and means for causing the said negative and sensitive films to follow paths of unequal length between said pair of exposure openings, whereby one film is shifted longitudinally with respect to the other film between the two openings, substantially as set forth.

3. In a photographic printing apparatus, the combination with a frame having a pair of exposure openings of means for feeding a negative and a sensitive film together across said openings and intermittently bringing the same to rest at each opening, said intermittent feed operating to move the two films at each step a distance equal to the length of a plurality of adjacent pictures greater than one, and means for causing the said negative and sensitive films to follow paths of unequal length between said pair of exposure openings, whereby one film is shifted longitudinally with respect to the other film between the two openings, substantially as set forth.

4. In a photographic printing apparatus, the combination with a frame having a pair of exposure openings of means for feeding a negative and a sensitive film together across said openings, and means for causing a longitudinal shift of one film relatively to the other a distance equal to the length of an integral even number of pictures between said pair of exposure openings, substantially as set forth.

5. In a photographic printing apparatus, the combination with a frame having a pair of exposure openings of means for feeding a negative and a sensitive film together across said openings, and intermittently bringing the same to rest at each opening, the feeding means being so arranged with relation to the films as to bring odd numbered sections of the films to rest in front of one opening, and moving the same past the other opening without stopping, and even numbered sections of the films to rest in front of the last named opening, and moving the same past the first named opening without stopping, substantially as set forth.

6. In a photographic printing apparatus, the combination with a frame having a pair of exposure openings of means for feeding a negative and a sensitive film together across said openings, and intermittently bringing the same to rest at each opening, the feeding means being so arranged with relation to the films as to bring odd numbered sections of the films to rest in front of one opening, and moving the same past the other opening without stopping, and even numbered sections of the films to rest in front of the last named opening, and moving the same past the first named opening without stopping, and shutters for said openings, and means for operating said shutters timed to expose said films while the same are at rest only, substantially as set forth.

7. In a photographic printing apparatus, the combination with a frame having a pair of exposure openings of means for feeding a negative and a sensitive film together across said openings, and intermittently bringing the same to rest at each opening, the feeding means being so arranged with relation to the films as to bring odd numbered sections of the films to rest in front of one opening, and moving the same past the other opening without stopping, and even numbered sections of the films to rest in front of the last named opening, and moving the same past the first named opening without stopping, and shutters for said openings, and means for operating said shutters time to expose said films while the same are at rest only, and means for causing the said negative and sensitive films to follow paths of unequal length between said pair of exposure openings whereby one film is shifted longitudinally with respect to the other film between the two openings, substantially as set forth.

This specification signed and witnessed this 18th day of December, 1905.

FRANK L. DYER.
DELOS HOLDEN.

Witnesses:
J. F. RANDOLPH,
MINA C. MACARTHUR.

700 a/

Correction in Letters Patent No. 970,614.

It is hereby certified that in Letters Patent No. 970,614, granted September 20, 1910, upon the application of Frank L. Dyer, of Montclair, and Delos Holden, of Upper Montclair, New Jersey, for an improvement in "Apparatus for Printing Moving-Picture Films," an error appears in the printed specification requiring correction as follows: Page 1, line 85, the word "alteration" should read *alternation*; and that the said Letters Patent should be read with this correction therein that the same may conform to the record of the case in the Patent Office.

Signed and sealed this 11th day of October, A. D., 1910.

[SEAL.]

E. B. MOORE,

Commissioner of Patents.

E. L. GREENSFELDER.

METHOD AND APPARATUS FOR SYNCHRONOUSLY PRODUCING SOUNDS TO ACCOMPANY MOTION PICTURES.

APPLICATION FILED MAR. 30, 1916.

1,254,684.

Patented Jan. 29, 1918.

4 SHEETS—SHEET 1.

Fig. 1.

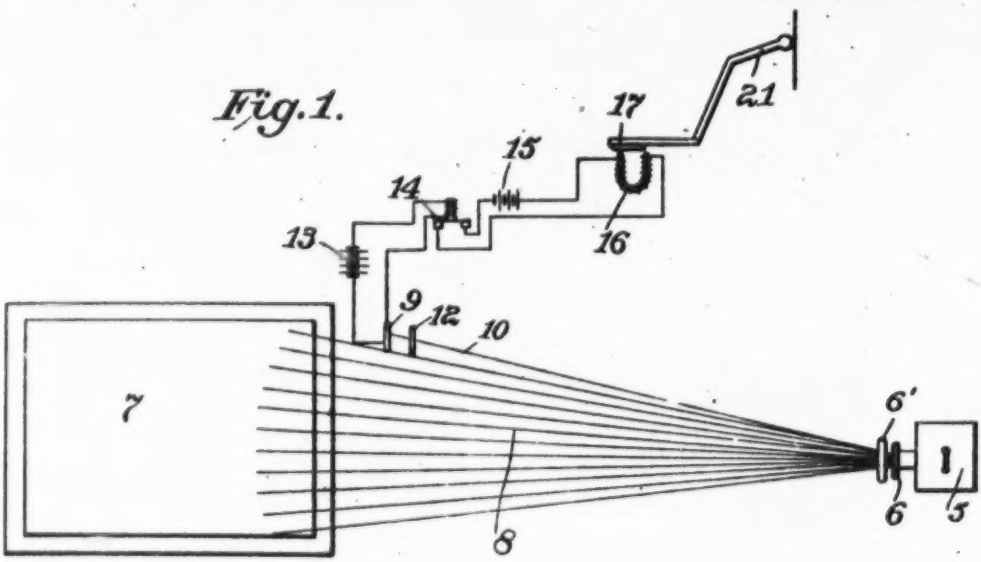

Fig. 2.

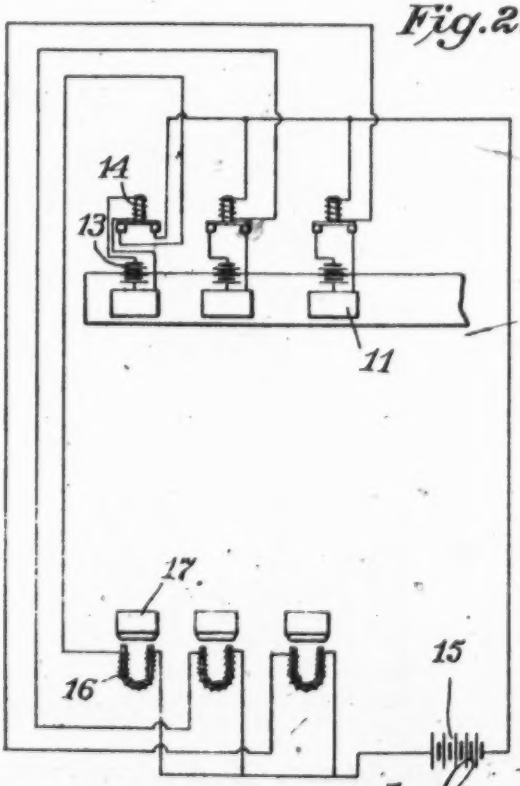

Fig. 3.

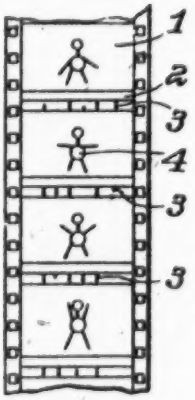

Inventor:
Elmer L. Greensfelder,
by Spear Middleton, Donaldson & Spear
Attys

E. L. GREENSFELDER.

METHOD AND APPARATUS FOR SYNCHRONOUSLY PRODUCING SOUNDS TO ACCOMPANY MOTION PICTURES.

APPLICATION FILED MAR. 30, 1916.

1,254,684.

Patented Jan. 29, 1918.

4 SHEETS—SHEET 2.

Fig. 4.

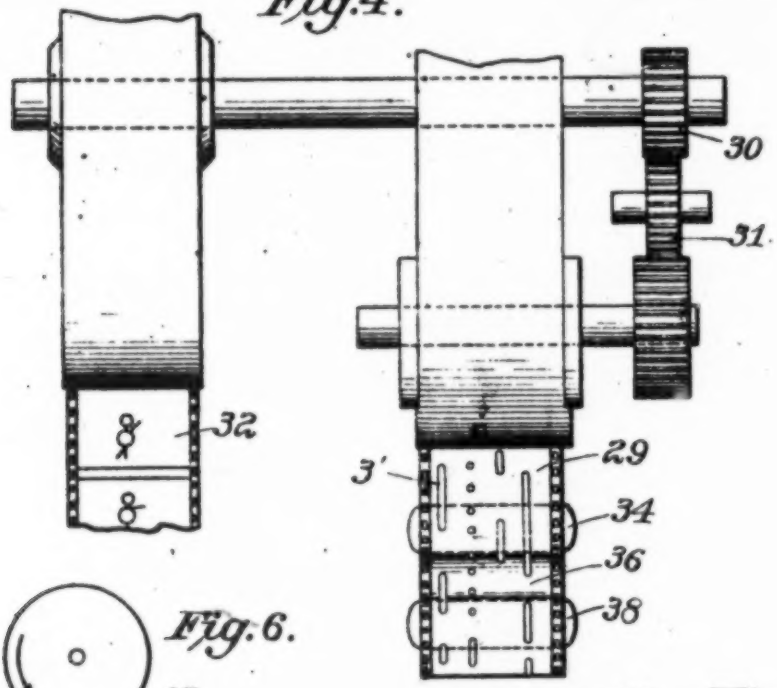

Fig. 6.

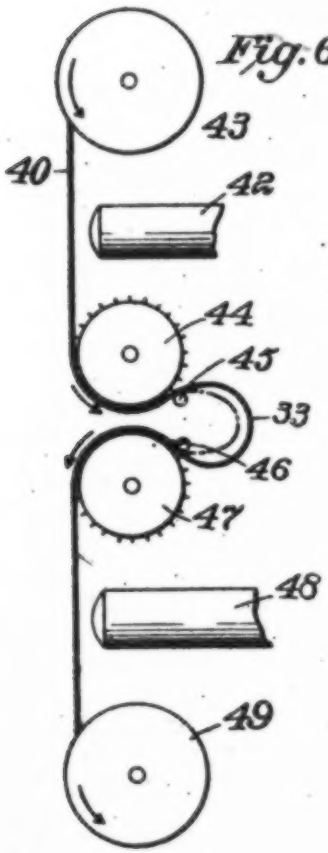

Fig. 5.

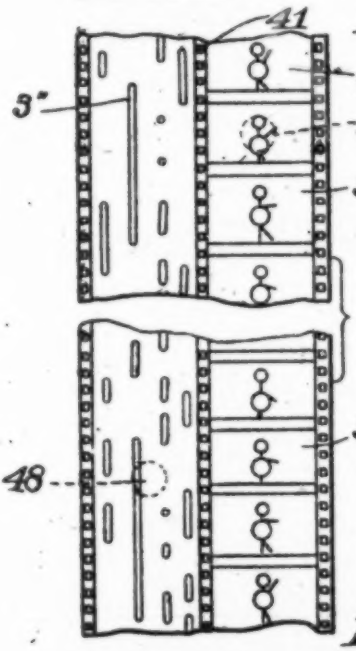

Inventor:

Elmer L. Greensfelder:

by Spear, Middleton, Marshall & Spear

Attys.

E. L. GREENSFELDER.

METHOD AND APPARATUS FOR SYNCHRONOUSLY PRODUCING SOUNDS TO ACCOMPANY MOTION PICTURES.

APPLICATION FILED MAR. 30, 1916.

1,254,684.

Patented Jan. 29, 1918.

4 SHEETS—SHEET 3.

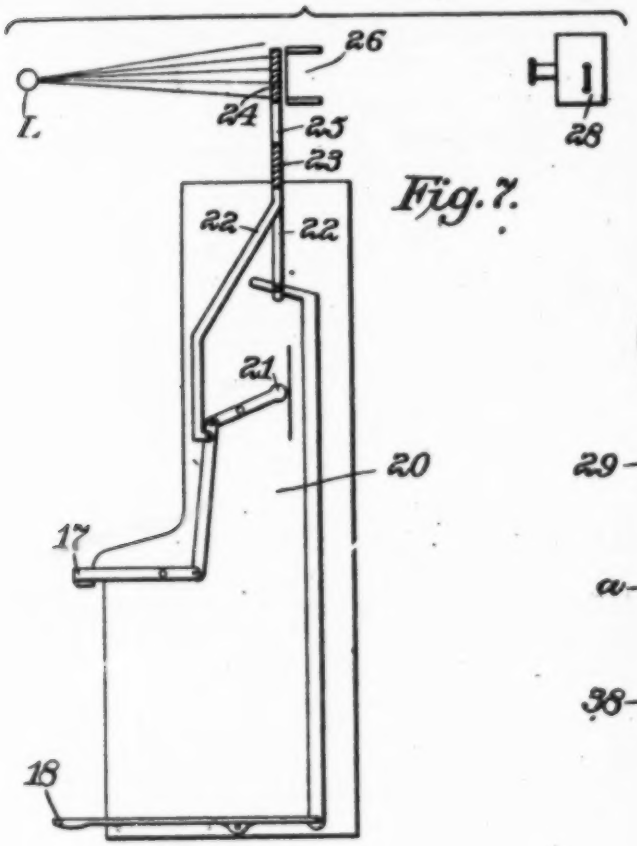

Fig. 7.

Fig. 9.

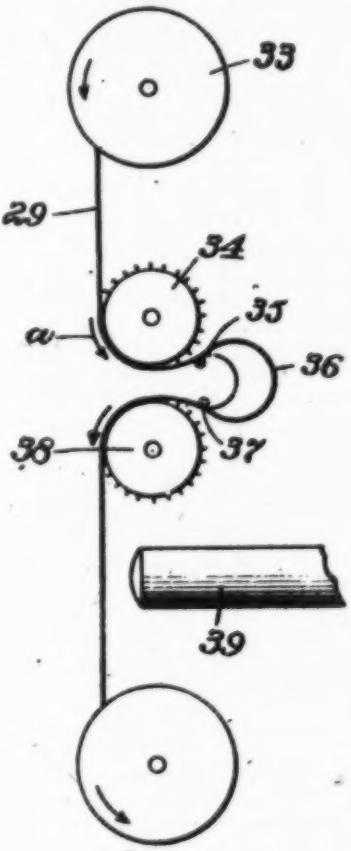

Fig. 8.

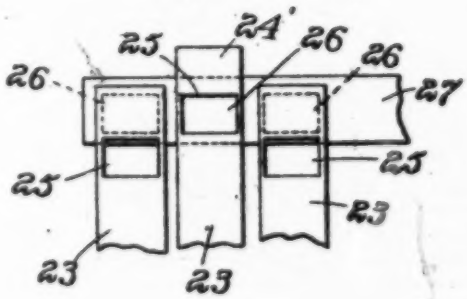

Inventor:

Elmer L. Greensfelder,

by Spear, Middleton, Donaldson & Spear

Attys.

E. L. GREENSFELDER.

METHOD AND APPARATUS FOR SYNCHRONOUSLY PRODUCING SOUNDS TO ACCOMPANY MOTION PICTURES.

APPLICATION FILED MAR. 30, 1916.

1,254,684.

Patented Jan. 29, 1918.

4 SHEETS-SHEET 4.

Fig. 10.

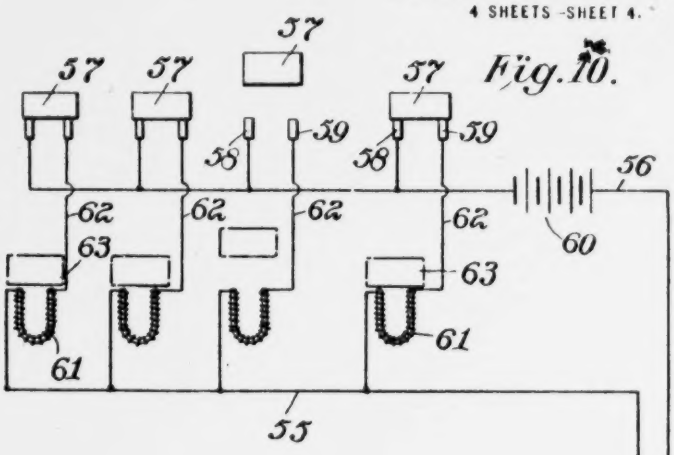

Fig. 11.

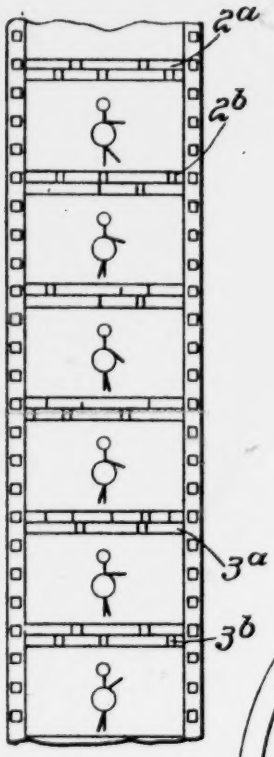

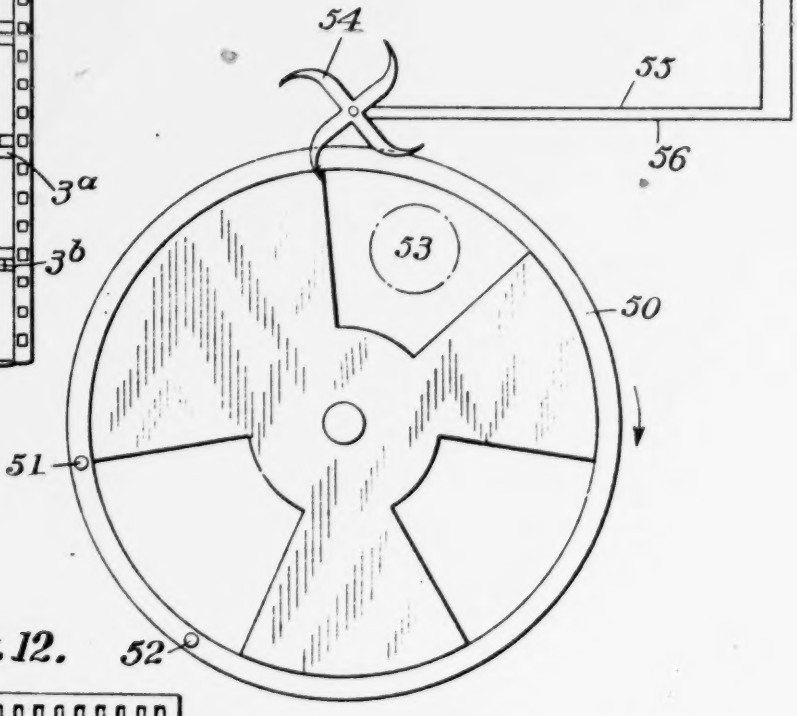

Fig. 12.

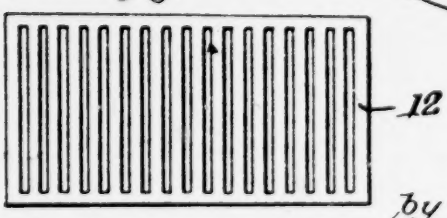

Inventor:

Elmer L. Greensfelder,

by Spear Middleton, Denardo & Spear

Atty's

UNITED STATES PATENT OFFICE.

ELMER LEWIS GREENSFELDER, OF BALTIMORE, MARYLAND.

METHOD AND APPARATUS FOR SYNCHRONOUSLY PRODUCING SOUNDS TO ACCOMPANY MOTION-PICTURES.

1,254,684. Specification of Letters Patent. Patented Jan. 29, 1918.

Application filed March 30, 1916. Serial No. 87,788.

To all whom it may concern:

Be it known that I, ELMER L. GREENSFELDER, a citizen of the United States, and residing at Baltimore, Maryland, have invented certain new and useful Improvements in Methods and Apparatus for Synchronously Producing Sounds to Accompany Motion-Pictures, of which the following is a specification.

The present invention relates to an improved method of producing different sounds during the projection of motion pictures upon the object screen. As is customary at present, while the pictures are being shown upon the screen, the orchestra plays appropriate musical selections. In order to produce a more realistic effect the music is generally chosen and conducted so as to give added expression to the actions and descriptive scenes being reproduced in pantomime on the screen. Unusual sounds, such as the report of a gun, the shriek of a whistle, the clatter of horses' feet, the cry of a child, the ringing of a bell, etc., all of which add greatly to the vividness of the scene, are generally assigned to one of the men in the orchestra to be reproduced as nearly in synchronism with the corresponding action in the picture as possible.

The object of the present invention is to provide an improved method whereby these various supplemental sounds, or even the piano accompaniment will be produced by the various instruments in exact synchronism with the reproduction on the picture screen of the scene of which they are illustrative.

The invention consists in providing a system of control for these several instruments which will be automatically operated by the picture film itself. It consists, more specifically, in photographing on the film a series of lines, or marks, disposed parallel to the length of the film, and suitably positioned in relation to the individual pictures of the scene being reproduced, to accompany the action or description which it is desired to have emphasized by the corresponding sound. These lines or marks are made transparent, white, or translucent on a darkened background. The lines may each represent one note of a piano (in the case of a piano record), while others may represent an expression lever, a sustaining pedal, or the operating mechanisms, or instrumentalities for beating a drum, ringing a bell, blowing a whistle, or producing like noises. The light from the motion picture machine passes through these transparent "sound marks" as the film is being shown on the screen. These light rays are intercepted between the lens of the machine and the screen, or at the screen, and caused to fall upon a series of exposed, separate, selenium cells. An individual selenium cell is provided for each "sound mark" of the film and each ray of light is directed by a system of slots and guides to exactly register with its corresponding cell. These cells are in turn each connected with a separate relay, electric battery and electro-magnet, the latter being so placed as to mechanically operate the sound instrumentality upon its becoming energized.

The invention further contemplates the provision of a method by which the musical instruments may be controlled and instrumental selections rendered separately and independently of the pictures, as for example, during the intermission of performances, or at any desired time or place.

The invention includes among other objects suitable arrangements and connections, whereby the sound producing instruments may be located near the screen or at a point sufficiently remote from the motion picture machine to produce the desired effects upon the audience.

The invention, while embodying in all of its forms the main principles of operation above set forth, may be varied somewhat to adapt itself to different kinds of machines. For example as previously pointed out, the "sound marks" may be placed on the picture film and be operated by the intermittent feed of the machine. Besides this method the "sound marks" might be formed on a separate reel of film adapted to have a continuous motion and geared to the sprocket turning the picture reel. Again a continuous method of projecting the "sound marks" may be employed in which a widened reel is used, on one side of which are the "sound marks", while the pictures occupy the remaining space.

With these and other objects in view the invention consists in the combination and arrangement of parts more fully described in the following specification, illustrated in the accompanying drawings and pointed out in the appended claims.

In the drawings the various methods by which the invention may be put into practice are illustrated diagrammatically by a series of views suggesting the arrangement and use of the several forms of apparatus employed.

In the drawings:—

Figure 1 is a diagrammatic view illustrating one embodiment of the present invention.

Fig. 2 is a diagram showing the electrical connections for the same more in detail.

Fig. 3 is a portion of a film of usual type having one arrangement of "sound marks" photographed thereon.

Fig. 4 illustrates diagrammatically a modified arrangement involving the use of two separate films driven synchronously.

Fig. 5 is a diagrammatic plan view illustrating a further modified arrangement involving the use of a double width film.

Fig. 6 illustrates the arrangement of Fig. 5, shown in side elevation.

Figs. 7 and 8 illustrate diagrammatically in side and front elevational views respectively the apparatus used in recording the "sound marks" on a film.

Fig. 9 illustrates diagrammatically take-up mechanism used to move the film at a constant speed before the projecting apparatus.

Fig. 10 illustrates diagrammatically an arrangement for sustaining the connecting of the electric circuits until the next consecutive row of "sound marks" is before the projecting lens.

Fig. 11 is a modified form of film.

Fig. 12 illustrates the screen 12.

The invention will first be described in connection with the method illustrated by the diagrammatic views, Figs. 1, 2 and 3, in which a series of "sound marks" are recorded on a small section of the ordinary picture film. Fig. 3 shows a fragmental strip 1 of an ordinary motion picture film, having the usual transverse sections 2 on which there is no photograph or marking. In addition this view shows horizontal rows of "sound marks" 3, located immediately above the picture 4 and below the section or blank strip 2. It is obvious that the "sound marks" 3 could be located equally well below the picture rather than above. These "sound marks" consist of a series of translucent, transparent or white spaces, photographed on a darkened surface in the form of parallel lines extending in a direction parallel to the length of the film. The purpose of these "sound marks" is to permit rays of light from the lens of the projecting machine to pass through when the picture film is being projected upon a screen. The manner in which these lines or "sound marks" are photographed on the film will be described in detail in another part of this specification. Fig. 1 illustrates diagrammatically the relative position and arrangement of all the instrumentalities employed in the use of an ordinary film carrying the "sound marks" 3 thereon at intervals between the pictures. The projecting motion picture machine 5, with its lens 6 and shutter 6′ is suitably located so as to project the pictures on the object screen 7, 8 representing the cone of light rays passing from the lens to the screen. A shelf 9 is placed at a suitable point between the lens 6 and screen 7, or at the screen 7, so as to intercept the rays of light 10 coming from the film through the "sound marks" 3. The shelf 9 contains a plurality of selenium cells or plates 11 arranged in a horizontal row corresponding in number and arrangement to the "sound marks" 3 on the film. A slotted screen or grating 12 may be properly positioned in front of the shelf 9 for the purpose of reducing the magnified light rays coming from the "sound marks" and preventing overlapping of the rays on the selenium surfaces. Each particular "sound mark" 3 on the film has a corresponding selenium cell 11 on the shelf 9, upon which it is adapted to impinge a ray of light as it passes between the light source and the lens of the projecting machine. When, for example, it is desired to apply the invention for the purpose of operating a player piano, eighty-eight "sound marks" 3 are provided, one for each note of the piano and additional "sound marks" for expression levers. The number and arrangement of these "sound marks" can be varied at will according to the number and variety of sound instruments it is desired to operate.

As previously pointed out, the rays of light 10 being dispersed and directed through the "sound marks" 3 and then reduced by the slits of the grating 12, are directed upon the corresponding selenium cells 11. These latter are each connected with a battery 13 in series with a corresponding relay 14, which in turn are connected through a second battery 15, each to a corresponding electro-magnet 16 adapted to operate a control lever 17 of a piano key, expression pedal, drum stick or other sound producing instrument. It is well known that selenium, when exposed to a concentrated ray of light, changes its conductivity with a resultant lowering of its electrical resistivity. This electro-physical change is relied on for the purpose of closing the electric circuit, including battery 15 and the energization of the corresponding electro-magnet.

The exact system of electrical connections may be varied by providing, for instance, a single battery instead of the individual ones 13 to operate any of the selenium cells 11 on which the light might fall, or again battery 15 could be replaced by a number of small

batteries, one for each relay. Again either battery 15 or batteries 13 could be replaced by a source of current, such as the house current, connected through a transformer.

The position of the shelf 9, containing the selenium cells 11, can be placed at any arbitrary point in the path of the light rays coming through the "sound marks" 3, either at or near the screen 7, or at a point about midway between the screen and the lens (as shown in Fig. 1), or near the operator's room. In order to effect the different locations of the shelf 9, a mirror may be placed in the path of the projected light rays so as to reflect them at any desired angle. A special lens may be placed near the projecting camera, through which the light rays are passed and dispersed so as to allow the shelf 9 to be placed within a comparatively short distance of the projecting lens of the motion picture machine.

Instead of using a separate selenium cell for each "sound mark" as proposed, a single structure may be used with an exposed selenium surface which is divided lengthwise electrically into as many sections as there are sounds and expressions to be operated by tapping off at regular intervals and connecting separately with the sources of current, relays, electro-magnets and corresponding sound instruments and expression levers to be operated. A shelf of thin partitions placed before the subdivided selenium surface would prevent the interference of the light ray coming from a "sound mark" with any selenium surface subdivision except its corresponding one.

The method of photographing the "sound marks" 3, as used in the method illustrated in Figs. 1 to 3, will next be described in detail and reference is made to Figs. 7 and 8 of the drawing. The rows of "sound marks" are photographed onto the picture film by a motion picture camera, the film of which is moved intermittently as is done in photographing an ordinary motion picture scene. It is absolutely necessary that the film be moved, while the "sound marks" are being photographed, at exactly the same speed at which the picture film, of which they are to control the accompanying sounds and music, is moved. By way of illustration, Figs. 7 and 8 show the manner of photographing the "sound marks" to record the notes of music played upon a piano. Each key 17 or expression pedal 18 of a piano 20, or other instrument the sound of which is to be recorded, operates a hammer 21, or corresponding part of another instrument, and at the same time moves a rod 22, which in this case is moved vertically. At the upper end of the rod 22 a plate 23 is carried, provided with blind or shuter part 24 and a corresponding opening 25 located immediately below the same. The plate 23 is adapted to normally remain in its lowered position with the shutter 24 intercepting the rays of light from any suitable source L and preventing them from registering with an aperture 26 formed in a horizontal shelf 27. A motion picture camera 28 is suitably positioned behind the shelf 27 in line with the series of apertures 26. As the key or pedal of the piano operates the hammer 21, the rod 22 and plate 23 are moved so as to bring the opening 25 opposite the aperture 26 and allow the light from the source L to pass therethrough and be photographed by the motion picture camera 28. The film of the camera 28 must be moved at the same speed for the purpose of photographing the "sound marks" 3, as when the camera is used for the purpose of photographing the corresponding scene to be reproduced. While the "sound marks" 3 are being made by photographing the light intermittently passing through the aperture 26, the picture part of the film in camera 28 is screened by a blind or shutter so as to remain unexposed. In this manner the "sound marks" 3 are photographed only on the narrow strip of the film shown in Fig. 3.

In order to secure the best results it has been found advisable to have a motion picture positive properly pieced and joined so as to be ready for projecting and exhibiting before recording on the film in camera 28 the rows of "sound marks" that are to accompany the animated picture. This positive should contain on it blank spaces in the position of 3, Fig. 1. On the completed positive ready for the market these blank spaces will be filled in by rows of sound marks, and the spaces for the pictures by the pictures, which can be effected by such a method as printing the positive from the two superimposed negatives, as will be hereinafter described. The pianist or musician, who is to play the accompaniment to be recorded for the picture, watches the positive picture as it is projected on the screen before him from a motion picture apparatus at a definite speed. After he has become familiar with the picture, the positive is again projected through the motion picture apparatus and he then plays the accompaniment to the picture, introducing whatever melodies, chords, compositions or sound effects he thinks appropriate to the action of the objects or characters in the picture. The instrument which he operates is connected and controlled by the mechanisms just described in connection with Figs. 7 and 8, and the "sound marks", corresponding to the sounds and expressions produced, are recorded on the film of camera 28, it being understood that this camera is operated at precisely the same speed at which the picture projecting machine was operated. A developed negative containing the rows of "sound marks", but on which the spaces for the pictures are blank, is superimposed upon

a developed negative properly pieced and joined and having the pictures photographed thereon but having spaces for the "sound marks" left blank, and a print is made from this combined negative which will give a positive containing the pictures 4 and the corresponding rows of "sound marks" 3, shown in Fig. 3.

Another method by which these rows of "sound marks" 3 may be recorded so as to appear as shown in Fig. 3, is by making a marked or perforated roll of the music and sounds, such as is used in player pianos and automatic musical instruments. This roll is then moved in the direction of its length at the proper speed and is photographed through a slit by a motion picture camera, on the film of which the spaces for the pictures are not exposed to the light. The finished positive containing the pictures and "sound marks" in their proper positions may then be made by superimposing two negatives, as above described.

The method of photographing the "sound marks" 3 by the use of the motion picture camera necessarily involves a series of intermittent exposures, due to the operation of the motion picture camera shutter. It will be seen that some of the notes so photographed or marked will be of such length as to be recorded by "sound marks" extending over several consecutive pictures, while others may be of such brief duration as to be represented by "sound marks" contained on only one or two consecutive pictures. It is necessary to have the individual electric circuits so adjusted as to be sufficiently sluggish and therefore not disconnect the current when a certain "sound mark" is continued over two or more consecutive pictures, otherwise the note or sound which was intended to be sustained would not be reproduced continuously. On the other hand, the circuits must be so adjusted as to disconnect whenever their corresponding "sound mark" does not accompany a picture.

One method by which the circuits operating the electro-magnets can be made to hold over without disconnecting the current until the next consecutive row of "sound marks" is in position before the lens, is illustrated by the use of the apparatus shown in Fig. 10. The shutter 50 is equipped with two lugs 51 and 52 located as shown in Fig. 10, so that when the shutter 50 revolves before the projecting lens 53 they operate a switch 54 which makes and breaks the current flowing through wires 55 and 56. Lug 51 closes the circuit so that the electro-magnets energized by the "sound marks" 3 on the picture before the projecting lens remain energized until the film has passed behind the shutter and the next consecutive picture and row of "sound marks" is before the projecting lens; then lug 52 disconnects the current, at which moment light from the next row of "sound marks" is projected to the selenium cells. Each note, expression lever or sound hammer 57 when operated or sounded makes contact with separate contact points 58 and 59. Contact points 58 are connected by a battery 60 or other source of current to the switch 54 at the shutter and the other wire 55 running from the switch 54 connects with a pole of each electro-magnet 61. The other pole of each electro-magnet is connected by a separate wire 62 to its respective contact point 59. 63 shows the positions of the keys when a piano is used. By this method whenever a sound or expression instrumentality is operated or sounded, each of the particular sounds or expressions is sustained until the next consecutive row of "sound marks" is in position before the projecting lens. The sustaining of the sounds and expressions is effected while the light falling on their corresponding selenium cells is screened off by the opaque sections of the shutter.

A further method of keeping the electro-magnet circuits from disconnecting until the next consecutive picture is in proper position before the lens, is to have the film made with the "sound marks" recorded thereon as shown in Fig. 11. This form of film is practically the same as that shown in Fig. 3, except that in the present form there are additional rows of "sound marks" 2^a, 2^b, etc., in the spaces which, in ordinary films, exist between the pictures. The "sound marks" 2^a are the same as those indicated at 3^a and the "sound marks" at 2^b are the same as those indicated at 3^b, etc. These identical rows of "sound marks" are always separated by the same number of pictures. In allowing the rays of light to pass through the "sound marks" a secondary projecting lens is used which is also focused on the selenium cells. This secondary lens is used only for the "sound marks" 2^a, 2^b, etc., and the main projecting lens is used to allow the rays of light to pass through the "sound marks" 3^a, 3^b, etc. As the rays of light from main lens passes through the "sound marks" 3^a, "sound marks" 2^a appear in position before the secondary lens. As soon as the shutter is about to screen off marks 3^a then the rays of light from the secondary lens passes through 2^a and thus the identical marks are projected and superimposed on the selenium cells. This row of marks 2^a remains before the secondary lens until 3^b have replaced 3^a before the main projecting lens, then a shutter screens off 2^a and in a similar manner 2^b next appear before the secondary projecting lens. In this manner, although the film is moving intermittently before the main lens, yet the selenium cells are properly kept in the path of the light until the next row of "sound marks" is in position before the main lens.

By the methods just described the action in the motion picture will be synchronous with the accompanying sounds. Should the film break, as happens in operating motion picture machines now in use and should the operator piece together the broken film, the sound and action on the mended film will still remain synchronous, even though one or more pictures of the film be left off as the corresponding "sound marks" for the accompanying sound will have been removed with the pictures.

The method in which the "sound marks" are photographed on a separate film adapted to be continuously driven and geared to the sprocket turning the picture film will next be described. As shown in Fig. 4, a separate film 29 is used for the "sound marks" and instead of having them formed in rows between the pictures, as described in connection with Figs. 1 to 3, the marks for each note, expression element or sound instrument are continuous. The "sound marks" 3′ consist of transparent marks parallel to the direction of the length of the film and vary in length in direct proportion to the length or duration of the sound which they represent. Here the "sound marks" 3′ are similar in appearance to the slits or perforations of the ordinary music roll used in player pianos and automatic musical instruments of that type. This sound film 29 can be photographed from an operating piano or mechanism, such as illustrated in Fig. 7 and described in connection therewith, except that the reel in the photographing camera 28 must move before the lens at a constant continuous speed and not intermittently and with no shutter interference. This can be done by removing the shutter and intermittent sprocket mechanism of the ordinary motion picture machine. As described in connection with the method illustrated in Figs. 1 to 3 and 7 and 8, this film may be made by first making a perforated roll of the sound accompaniment, such as is used for player pianos and then while this roll is moving in the direction of its length and at the proper speed, photographing it through a slit by a motion picture camera from which the shutter and intermittent sprocket mechanism have been removed. The mechanism holding the film 29, having the "sound marks" photographed thereon, is geared to the sprocket 30, by suitable mechanism 31, of the picture film 32, or it is geared to a mechanism adapted to turn the sound film at the same speed at which it was moving when photographed and thus produce the sounds synchronously with the accompanying pictures. It will be understood that separate lenses are used for the purpose of projecting the pictures of the film 32 and the "sound marks" 3′ of the film 29. The film 32 will operate in the intermittent manner before the projecting lens used in exhibiting motion pictures and will be thus projected to the screen. The accompanying sound film, however, must move at a constant continuous speed before the lens, which is to project the rays of light through the "sound marks" 3′ on to their respective selenium cells. This can be effected by a take-up mechanism shown in section in Fig. 9. Here the film of "sound marks" 29 unwinds from the spool 33 at an intermittent speed proportionate to the intermittent speed of the picture film 32 to which it is geared. It then passes over sprocket 34 behind a guide bar 35 to form a loop 36 back of a second guide bar 37 and over a second sprocket 38 and then moves at a constant continuous speed in front of a projecting lens 39, which projects and disperses the rays penetrating the "sound marks" 3′ to their corresponding selenium cells located in the path of these rays and connected to their corresponding source of current, relay, electromagnets, and sound producing instruments, as hereinbefore described. If the sprocket 38 is turning at a constant continuous speed it will allow the sound film to pass at such speed before its projecting lens 39, while the loop 36 of the film will decrease and increase in size and supply sufficient lengths of the film, to permit of this constant continuous speed over sprocket 38 and yet allow the film to pass intermittently over sprocket 34 in the direction of the arrow *a*.

Should the sound or picture film described in this method break, to maintain synchronism in the operating of the two films, it would be necessary in repairing the broken film to add a proportionate amount of blank film and thereby keep both films of the original proportionate length.

Referring to Figs. 5 and 6, the invention is shown as applied to a film of double width, one-half of which contains the pictures 38 while the other half contains the "sound marks" 3² formed similarly to those illustrated and described in connection with Fig. 4: The film 40 in this instance, is provided with an additional row of perforations 41 to fit cogs on the mechanism in order to prevent buckling of the film in operating it through the projecting machine. The film could be made in a manner similar to that described in connection with the method illustrated by Fig. 4 but it will be necessary in projecting this film to have the "sound marks" moved at a constant continuous speed before its projecting lens while the pictures must be moved before the lens which projects them in the intermittent manner usually employed in projecting motion pictures. A convenient way to obtain the film 40 is to first photograph a negative of the original sound film and place it side

by side with a finished and pieced negative of the corresponding picture film, then from the two print a one piece double width positive, such as shown in Fig. 5. The "sound marks" do not necessarily have to be immediately opposite or adjacent to the particular picture or pictures which they are to accompany in order to have synchronism between the two in projecting. The "sound marks" 3' do not pass in front of the lens 42 but to one side of it and consequently are not projected by it. The lens 42 is used to project the pictures as the film 40 comes from the reel 43. After passing the lens 42 the film passes over a take-up mechanism similar to that shown and described in connection with Fig. 9, except that in the present case the sprocket 44, bars 45 and 46, and sprocket 47 are broad enough to accommodate the widened film containing both the pictures and the "sound marks" adjacent to one another. From the take-up mechanism the film passes before the lens 48 and is wound upon reel 49. Lens 48 is used for projecting the rays of light through the "sound marks" and is offset to one side of lens 42. On passing over the sprocket 47 the film is moved at a constant continuous speed instead of intermittently as when passing before lens 42. It will thus be seen that from this arrangement the pictures 38' are intermittently fed so as to be projected by the lens 42 while the "sound marks" 3' are passing simultaneously to one side of the lens and therefore not receiving light therefrom. Then later as the film moves with a continuous constant motion before lens 48, the rays of light pass through the "sound marks" 3' while the pictures are moving to one side of the lens and receive no light therefrom.

Should the operator have reason to mend a broken film, such as is used in this method, the synchronism of sound and action will not be destroyed in operating the mended film, for every section of the picture film removed a corresponding length of the sound film could be removed.

While I have shown the present invention as applied for the purpose of reproducing sounds, such as the playing of a piano, etc., it is to be understood that the invention is not limited to the particular examples illustrated and described in the present case, as various other instruments and sound producing mechanisms can be equally well operated by the use of this method, the electromagnets either depressing the notes and expression pedals as described or controlling stops in front of tracker-board apertures in electrically operated instruments.

Having described my invention what I claim is:—

1. The hereindescribed method of producing musical sounds and the like synchronously with the actions in a motion picture film that is being projected, consisting in photographing upon a film sound marks in given relation to the pictures, simultaneously projecting the pictures and rays of light through the sound marks, whereby the pictures will be thrown on a screen and the light from the sound marks will be directed upon selenium cells to close electric circuits and operate suitable sound producing instruments.

2. The herein described method of producing musical sounds and the like synchronously with the actions in a motion picture that is being projected, consisting in photographing pictures on certain portions of a picture film, recording rows of sound marks on other parts of the film, and simultaneously projecting the pictures upon a screen and rays of light through the sound marks upon the light operated means controlling certain sound producing instruments.

3. Apparatus for synchronously producing musical sounds and the like to accompany the projection of motion pictures comprising, a film having picture scenes and sound marks photographed thereon, means for simultaneously projecting the pictures and rays of light through the sound marks, sound producing instruments, and light controlled means upon which the sound marks are projected for operating said sound producing instruments.

4. Apparatus for synchronously producing musical sounds and the like to accompany the projection of motion pictures comprising a film having sound marks and pictures contained thereon in a given relation, sound producing instruments, light operated means adapted to operate said instruments, and means for simultaneously projecting said pictures and rays of light through said sound marks onto said light operated means.

5. Apparatus for synchronously producing musical sounds and the like to accompany the projection of motion pictures comprising a picture film having sound marks thereon, sound producing instruments, electro-magnetic operating means therefor, electric circuits including said electro-magnetic means, light-operated means for closing and opening said circuits, and means for simultaneously projecting the pictures and light through the sound marks on to said light-operated means.

6. Apparatus for synchronously producing musical sounds and the like to accompany the projection of motion pictures comprising a picture film having sound marks thereon, sound producing instruments, electro-magnetic means for actuating said instruments, a plurality of selenium cells, electric circuits including said selenium cells and electro-magnets, and means for simul-

taneously projecting the pictures and rays of light passing through said sound marks on to said selenium cells for opening and closing said circuits.

7. A motion picture machine comprising in combination, a plurality of independently operable sound producing elements, and light operated means automatically controlled by the film for independently operating said elements synchronously with the actions of the pictures.

8. Apparatus for synchronously producing musical sounds and the like to accompany the projection of motion pictures comprising a picture-film having horizontal rows of transparent sound marks on sections thereof immediately preceding each picture, sound producing instruments, electro-magnetic means for actuating said instruments, a plurality of selenium cells, electric circuits including said selenium cells and electro-magnets, light operated means for opening and closing said circuits, said light operated means being adapted to be controlled by the rays of light through the sound marks.

9. Apparatus for synchronously producing musical sounds and the like to accompany the projection of motion pictures comprising a picture-film having horizontal rows of transparent sound marks on sections thereof between the pictures, sound producing instruments, electro-magnetic operating means therefor, electric circuits including said electro-magnetic means, light operated means for closing and opening said circuits, said light operated means being adapted to be controlled by the rays of light through the sound marks.

10. Apparatus for synchronously producing musical sounds and the like to accompany the projection of motion pictures comprising a film having picture scenes and sound marks photographed thereon, means for simultaneously projecting the pictures and rays of light through the sound marks, means for reducing the magnified light rays from the sound marks, sound producing instruments, and light controlled means upon which the sound marks are projected for operating said sound producing instruments.

In testimony whereof I affix my signature.

ELMER LEWIS GREENSFELDER.

H. C. BULLIS.

TALKING PICTURE APPARATUS.

APPLICATION FILED DEC. 15, 1915.

1,335,651. **Patented Mar. 30, 1920.**

2 SHEETS SHEET 1.

Fig. 1.

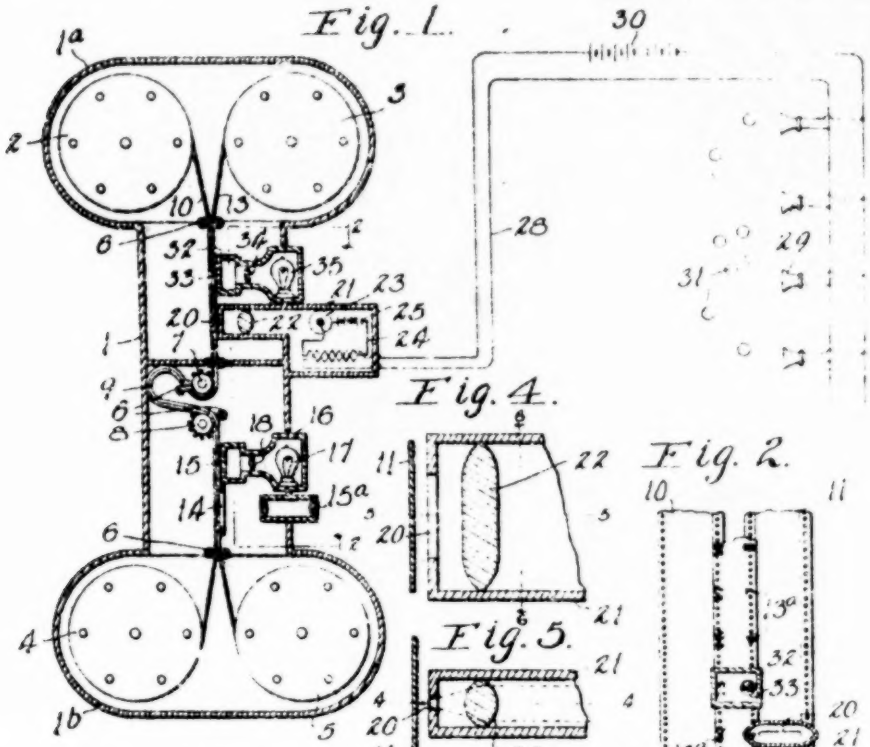

Fig. 4.

Fig. 5.

Fig. 2.

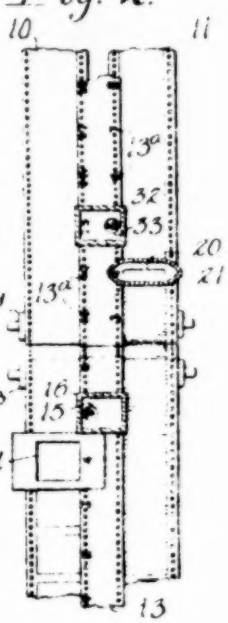

Fig. 3.

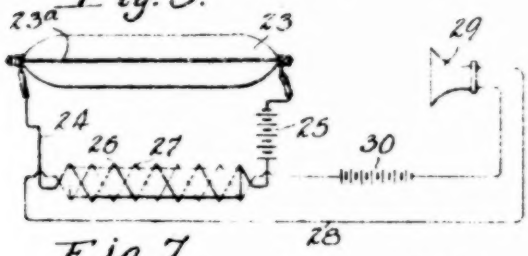

Fig. 7.

Fig. 6.

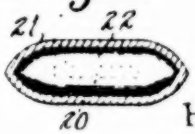

Inventor

HENRY C. BULLIS

By N. S. Ike

Attorney

H. C. BULLIS.

TALKING PICTURE APPARATUS.

APPLICATION FILED DEC. 15, 1915.

1,335,651. **Patented Mar. 30, 1920.**

2 SHEETS—SHEET 2.

Fig. 8.

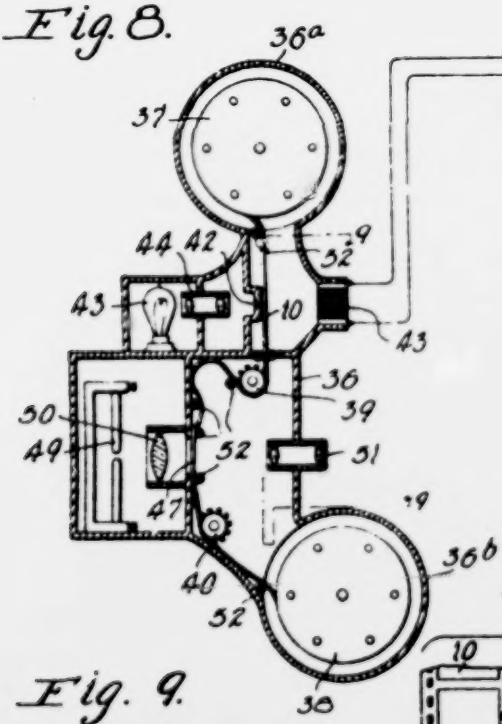

Fig. 11.

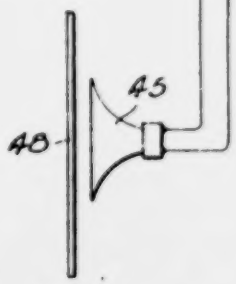

Fig. 9.

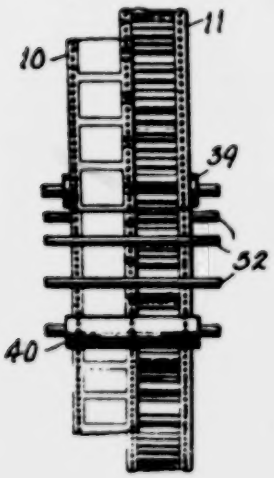

Fig. 10.

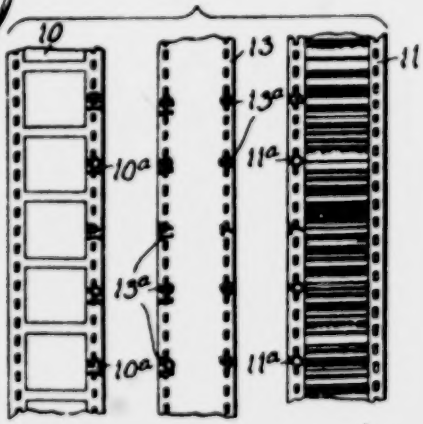

Inventor

HENRY C. BULLIS—

By H. S. Hill

Attorney

UNITED STATES PATENT OFFICE.

HENRY C. BULLIS, OF REDWOOD FALLS, MINNESOTA.

TALKING-PICTURE APPARATUS.

1,333,651. Specification of Letters Patent. Patented Mar. 30, 1920.

Application filed December 15, 1915. Serial No. 67,090.

To all whom it may concern:

Be it known that I, HENRY C. BULLIS, a citizen of the United States, residing at Redwood Falls, in the county of Redwood, State of Minnesota, have invented a new and useful Talking-Picture Apparatus; and I do hereby declare the following to be a full, clear, and exact description of the invention, such as will enable others skilled in the art to which it appertains to make and use the same.

The present invention relates to an apparatus for simultaneously taking and reproducing picture and sound records, thereby producing what are commonly termed "talking pictures", the object of the invention being to provide a device of this character which embodies novel features of construction whereby the picture record and sound record can be given the necessary individual treatment for developing them in the most effective manner and then readily assembled in such a manner as to bring the picture record and sound record in proper position to produce perfect synchronism when the pictures and sound are reproduced.

Further objects of the invention are to provide a device of this character which is comparatively simple and inexpensive in its construction, which admits of different emulsions and different treatments being employed in making the picture record and sound record, which provides corresponding identification marks upon the picture record and sound record so that there will be no difficulty in assembling the two records in the proper relation for the reproducing operation, which admits of the picture record and sound record being handled separately while being developed and subsequently joined together so as to produce a single film if such is desired, and which provides for reproducing the sound from a continuously moving portion of the film and the reproduction of the picture by an intermittently moving portion of the film.

With these and other objects in view, the invention consists in certain novel combinations and arrangements of the parts as will more fully appear as the description proceeds, the novel features thereof being pointed out in the appended claims.

For a full understanding of the invention, reference is to be had to the following description and accompanying drawings, in which:—

Figure 1 is a diagrammatic view of a form of apparatus suitable for simultaneously making the picture and sound records, the casing being shown in section.

Fig. 2 is a vertical sectional view on the line 2—2 of Fig. 1, looking in the direction of the arrows.

Fig. 3 is a detail view of the microphone controlled source of light which is used for making a photographic sound record upon the emulsion of the sound record film.

Fig. 4 is an enlarged horizontal sectional view through the lens and a portion of the casing which is used in connection with the microphone controlled source of light to make the sound record upon the film.

Fig. 5 is a vertical sectional view through the same on the line 5—5 of Fig. 4.

Fig. 6 is a transverse sectional view on the line 6—6 of Fig. 4.

Fig. 7 is a detail view of one of the cog wheels which is employed for moving the films through the record making apparatus.

Fig. 8 is a diagrammatic view similar to Fig. 1, showing the reproduction apparatus.

Fig. 9 is a sectional view on the line 9—9 of Fig. 1, showing the manner of assembling the two films in the reproducing apparatus.

Fig. 10 is a detail view of one of the toothed wheels used in the reproducing apparatus.

Fig. 11 is a detail view of portions of the picture film and sound film, together with a corresponding portion of the identification mark printing film, which is employed in connection with the two films when making the records.

Corresponding and like parts are referred to in the following description and indicated in all of the views of the drawings by the same reference characters.

In carrying out the present invention the picture record and sound record are made at the same time and by the same apparatus, but upon separate and distinct films. It has been previously proposed in this art to accomplish the result by making the picture record and the sound record upon the same film, although this is open to the objection that the proper emulsion, manipulation and development for obtaining the best results in the sound reproduction differ very materially from those required to obtain the

best results for the picture records. Where the two records are made upon the same film, using the same emulsion, it must be obvious that a proper treatment or development of one record can only be obtained at the sacrifice of the other record, since the special form of development required to get the best results from the two records would ordinarily be quite different. It will thus be seen that there are very important practical reasons why the two records can not be successfully and satisfactorily made upon the same film, as has been previously proposed, and it is the object of the present invention to overcome this particular objection, by providing a construction which admits of the records being made upon different films, which may have different emulsions, and may be individually treated in the development exactly as may be required to produce the best results. These two independent films have corresponding identification marks made upon the same at the time the two records are made, so that they can be assembled without difficulty in the proper manner necessary for a synchronous reproduction of the pictures and sounds.

Fig. 1 illustrates in a diagrammatic manner a form of apparatus adapted to be employed in making the picture and sound records. The numeral 1 designates the casing which is provided at the top thereof with a chamber 1^a within which are mounted the reel 2 from which the sensitized films are unwound and the reel 3 from which the opaque printing film is unwound, a similar chamber 1^b being provided at the bottom of the casing within which are mounted the reel 4 upon which the exposed films are wound and the reel 5 upon which the opaque printing film is wound. Suitable guide means 6 are provided at the top and bottom and intermediate points of the main portion of the casing 1 for holding the films and printing strip together during the record making operation. The numeral 7 designates the usual continuously rotating toothed roller and the numeral 8 the usual intermittently rotating toothed roller, the loop between the two rollers being indicated at 9. The conventional mechanism may be employed for operating these rollers and the picture taking mechanism, the portions of the films below the toothed roller 8 having an intermittent movement, while the portions of the films above the rollers 7 have a continuous movement.

The picture film 10 and sound film 11 are made separate and distinct from each other, and may be treated with the same emulsion, or with different emulsions, as found necessary to obtain the best results. The toothed rollers 7 and 8, one of which is shown in detail by Fig. 7, are each provided with four peripheral rows of teeth 12. The picture film 10 engages one set of the teeth 12, while the sound film 11 engages the opposite set of teeth 12, the two films being thus locked together and moved simultaneously through the machine. The printing strip 13 is arranged intermediate of the picture film 10 and sound film 11 and overlaps the adjacent inner edges of the two films, said printing strip being suitably perforated to engage the two inner rows of teeth 12 on the toothed rollers 7 and 8. This printing strip 13 is formed of opaque material, being provided at the edges thereof with transparencies 13^a in the form of identification marks. In the present instance numerals are employed, although any other suitable form of character might be substituted. These transparencies 13^a in the edges of the opaque strip 13 will, as hereinafter described, print corresponding identification marks 10^a and 11^a upon the picture film 10 and sound film 11, respectively. Inasmuch as the sound record must be made upon the continuously moving film above the loop 9, and the picture record upon the intermittently moving film below the loop 9, there will necessarily be a space between the corresponding transparencies 13^a on the opposite edges of the printing strip 13 in order that the portion of the sound record on the film 11 opposite an identification character 11^a may correspond to the picture opposite the same identification character 10^a on the picture strip. With the ordinary forms of moving picture machines, this interval would be ten spaces, so that similar transparencies 13^a on opposite sides of the printing strip 13 would be just ten spaces apart. Where numerals are employed, as in the present instance, there is a difference of ten units between those numerals directly opposed to each other on the printing strip, the numeral "7" being directly opposite the numeral "17", the numeral "8" directly opposite the numeral "18", etc.

The pictures are made in the usual manner through an aperture 14, a conventional form of lens 15 being shown as arranged in front thereof. Immediately above the aperture 14 is an aperture 15 arranged over the edge of the printing strip 13 and formed in one end of a suitable housing 16. The rays from a lamp 17 arranged within the housing are focused by a lens 18 upon the edge portion of the printing strip 13 which moves opposite the aperture 15. The various transparencies 13^a upon that side of the printing strip 13 which overlaps the edge of the picture film 10 are thus successively printed upon the edge of the picture film as the pictures are taken and the film advanced.

At a point above the loop 9 the sound film 11 moves across an aperture 20 in one end of a housing 21. This aperture 20 is in the form of a transverse slit (see Figs.

4, 5 and 6) and a laterally elongated lens 22 is arranged within the housing to focus the rays from a sound controlled source of light 23 through the slit 20 upon the sound film 11. The shape of the lens 22 is such as to focus the light rays in a transverse line, instead of in a point, although the slotted aperture 20 is essential to prevent what is termed halation. The intensity of the light rays from the source of light 23 varies with the sound, so that as the sensitized film 11 is moved past the aperture 20 the intensity of the light acting thereon will be continually changing, the variance in intensity being controlled by the sound which is to be reproduced. This result may be produced in different manners, although I have shown the source of light 23 as in the form of an incandescent bulb having a long filament 23ª arranged parallel to the slit 20. The circuit 24 for the lamp 23 includes a source of electrical supply 25 and one coil of an electro-magnetic coupler 26. Surrounding the coil 26 is another coil 27 arranged in the circuit 28 of a microphone or series of microphones 29, a suitable source of energy 30 being also arranged in the said circuit. In Fig. 1, a series of the microphones 29 are shown as arranged in series and mounted at the back of the stage, the possible position of different actors in front of the microphones being indicated by the small circles 31. The sound waves will act through the microphones to produce fluctuations of the current in the microphone circuit 28, and owing to the relation of the coils 26 and 27, the intensity of the current in the light circuit 24 will be caused to fluctuate by induction. The intensity of the light will vary with the strength of the current and, with the arrangement described, this will be controlled by the microphones. The connections in the electro magnetic coupling, constituted by the coils 26 and 27, in connection with the lamp and its source of energy, and the microphone and its source of energy, must be such that the inductive effect of the microphone circuit and its winding upon the coupling shall amplify the current flowing through the lamp and its winding in the coupling, thereby causing the loud sounds to produce dark striations upon the sound record film.

Arranged immediately above the housing 24 is a housing 32 having an aperture 33 in one end thereof and provided with a lens 34 and light 35. The rays from the light 35 are focused by the lens 34 through the aperture 32 upon that side of the printing strip 13 which overlaps the edge of the sound film 11. As the films are advanced the transparencies 13ª of that side of the printing strip are brought successively opposite the aperture 33 so that the characters [illegible] upon the edge of the sound film 11. It will be observed that the two printing apertures 15 and 33, respectively, are arranged just one step in advance of the picture taking aperture 14 and the sound record aperture 20, respectively, so that the identification characters are really printed upon the edges of the films before the picture record and sound record, although the relationship between the two films is maintained, so that the result is the same as though the identification characters were printed at the same time the records were made.

The exposed films 10 and 11 are developed separately, and each film may be manipulated and treated in the manner necessary to perfect the same to the best advantage, the identification marks printed through the transparencies in the edges of the opaque printing strip 13 appearing at intervals along the edges of the films, thereby enabling the two films to be subsequently reassembled without difficulty in the proper relation necessary to bring about a synchronous reproduction of the pictures and sounds. The pictures appear upon the picture film in the usual and well known manner, while the sound record appears in the form of a series of transverse striations of varying intensity. The result is a film with a ladder like strip of alternately dark and light zones merging into each other, as determined by the sound waves. From the original negatives positives for reproduction may be obtained in the usual manner by contact printing or otherwise.

One possible form of reproducing apparatus is shown by Fig. 8. The main casing 36 is provided at the top thereof with a chamber 36ª to receive the reel 37 from which the reels are unwound, and at the bottom thereof with a chamber 36ᵇ to receive the reel 38 upon which the films are rewound. The toothed roller 39 engages the films and rotates continuously, while the toothed roller 40 which is arranged below the roller 39 has an intermittent movement, said rollers being actuated by the usual mechanism. One of these rollers is shown in detail by Fig. 10, and it will be observed that they have three peripheral rows of teeth 41. For reproducing purposes there is no occasion to use the printing strip 13, and the inner edges of the picture film 10 and sound film 11 are overlapped and caused to engage the intermediate row of teeth 41. At a point above the continuously rotating toothed roller 39 the sound film 11 is moved across a slit or aperture 42 through which rays of light from a lamp 43 are focused upon the film by suitable lenses 44. The light acts through the sound film 11 upon a selenium cell 43, or some similar member arranged in the circuit 44 of a telephone receiver 45, a source of electrical energy 46

being arranged in the circuit. The striations upon the developed sound film 11 are of various degrees of density, so that the intensity of the light acting upon the selenium cell 43 will vary inversely as the density of the sound record striations, the light acting strongly upon the selenium cell when a comparatively transparent striation is brought opposite the slit 42, and acting very weakly upon the selenium cell when a denser striation is brought opposite the slit. The resistance of the selenium cell, as is well known, varies with the intensity of the light acting thereon, so that the current in the telephone receiver circuit will be caused to fluctuate, these fluctuations being determined by the sound record, with the result that the original sound is reproduced.

Below the continuously rotating toothed roller 39 the films move intermittently and the picture film 10 is moved across an aperture 47, the pictures being projected upon a screen 48 by rays from a suitable source of light 49 which are preferably focused by the lenses 50 and 51. Suitable guide members 52 may be provided for coöperation with the rollers 39 and 40 to carry the films through the machine in the proper manner, and the mechanism for moving the films and projecting the pictures may be of the conventional construction.

After the films have been properly developed, and positives then produced from the negatives by contact printing or otherwise, the picture film 10 and sound film 11 are brought together and assembled for the reproducing apparatus. The corresponding identification characters 10^a and 11^a on the respective films indicate corresponding portions of the picture record and sound record, so that there is no difficulty in arranging the films for a synchronous reproduction of the pictures and sounds. The sound must be reproduced from the continuously moving film, while the pictures are reproduced from the intermittently moving film, so that the portion of the sound record corresponding to any particular picture must be several steps behind the picture as the film passes through the machine. Ordinarily, ten spaces would be about the proper amount so that in assembling the two films the numeral "7" on the sound film would overlap the numeral "17" on the picture film, etc. This relation, however, can be varied, as may be required to bring about a synchronous reproduction of the sounds and pictures. The picture film 10 and sound film 11 may either be kept separate and distinct from each other, or the overlapping edges thereof may be cemented together so as to produce in effect a single film.

The sound record is made simultaneously with the picture record, and this may be accomplished either by photographic means, as in the present instance, or by any other suitable means, although the two records are made upon separate films or strips so that they are susceptible of having the necessary individual treatment necessary to the best results. When the sound record is made photographically, the arrangement is such that the sound controlled lamp is caused to give a more intense light for the louder sounds than for the weaker sounds, with the result that the loud sounds produce dark striations upon the master film and the weaker sounds lighter striations. The sound record employed for reproducing purposes is made by contact printing from the master sound record film, and it will accordingly be obvious that in the reproducing sound record the loud sounds are represented by light or partially transparent striations while the weak sounds are indicated by dark striations. The light thus acts strongly upon the selenium cell for a strong sound and more weakly for a weak sound. This sound record, made upon a separate strip by photographic or other suitable means, bears identification characters corresponding to other similar identification characters produced upon the picture record, so that after the two records have been completed by the special individual handling or treatment necessary to the best results for each record, they can be readily assembled in the proper relation to produce a synchronous reproduction of the pictures and sounds.

Having thus described the invention, what I claim as new and desire to secure by Letters Patent, is:—

1. A talking picture apparatus including means for simultaneously making separate and independent sound and picture records, a marking element having separate oppositely located series of corresponding identification marks, and means for simultaneously printing said corresponding identification marks upon the two records to facilitate assembly for a synchronous reproduction.

2. Talking picture apparatus including a casing, means for simultaneously moving two independent films through the casing, means for making a picture record upon one of the films and a sound record upon the other film, and a printing member movable with the films and means for coöperating with said printing member for placing a series of corresponding identification marks upon the films to facilitate assembly for a synchronous reproduction.

3. Talking picture apparatus including a casing, means for simultaneously moving two independent films through the casing, means for making a picture record upon one of the films and a sound record upon the other film, and a printing strip movable with the films and overlapping the edges

thereof, said printing strip having identification characters thereon, and means cooperating with said strip to place a series of corresponding identification marks upon the films to facilitate assembly for a synchronous reproduction.

4. Talking picture apparatus including a casing, means for simultaneously moving two independent films through the casing, means for simultaneously making a picture record upon one of the films and a sound record upon the other film, an opaque printing strip overlapping the two films and provided at the overlapping portions thereof with transparent identification characters, apertures under which the transparent identification characters are movable, and means for projecting light through the apertures to print the identification characters upon the films.

5. Talking picture apparatus including a casing, means including toothed rollers for simultaneously moving two independent films through the casing, means for simultaneously making a picture record upon one of the films and a sound record upon the other film, an opaque printing strip perforated for engagement with the before-mentioned toothed rollers and movable through the casing with the films, the edges of the opaque printing strip overlapping the edges of the films and being provided with corresponding transparent identification marks, independent apertures under which the transparent marks upon the edges of the opaque printing strip are movable, and means for projecting light through the apertures to print the identification marks upon the edges of the films.

6. Talking picture apparatus including a casing, mechanism for moving two independent films through the casing, a portion of the movement being continuous while another portion thereof is intermittent, means for making a picture record upon the intermittently moving portion of one of the films, means for simultaneously making a sound record upon the continuously moving portion of the other film, and means for simultaneously placing corresponding identification marks upon the continuously moving portion of one film and the intermittently moving portion of the other film so that corresponding portions of the picture and sound records can be readily identified.

7. Talking picture apparatus including a casing, mechanism for moving two independent films through the casing, a portion of the movement being continuous while another portion thereof is intermittent, means for making a picture record upon the intermittently moving portion of one of the films, means for simultaneously making a sound record upon the continuously moving portion of the other film, and a printing strip movable through the casing with the films and overlapping the same, said printing strip having identification means thereon, and means cooperating with said strip for placing corresponding identification characters upon the two films so that corresponding portions of the sound record and picture record can be readily identified.

8. Talking picture apparatus including a casing, mechanism for moving two independent films through the casing, a portion of the movement being continuous while another portion of the movement is intermittent, means for making a picture record upon the intermittently moving portion of one of the films, means for making a picture record upon the continuously moving portion of the other film, an opaque printing strip movable through the casing with the films and overlapping the same, the overlapping portions of the opaque printing strip being provided with corresponding series of transparent identification characters, and means for projecting light upon the transparent identification characters for causing the same to be printed upon the films as the films and strip are moved through the casing.

9. Talking picture apparatus including a casing, mechanism for simultaneously moving two films through the casing, a portion of the movement being continuous while another portion thereof is intermittent, means for making a picture record upon the intermittently moving portion of one of the films, means for simultaneously making a sound record upon the continuously moving portion of the other film, an opaque printing strip movable through the casing with the films and overlapping the same, the overlapping portions of the opaque printing strip being provided with independent series of transparent identification characters, and the corresponding characters of the two series being at such an interval that one of them will be over the continuously moving film upon which the sound record is made while the other one is over the intermittently moving film upon which the picture record is made, and means for projecting light upon the corresponding transparent characters of the opaque strip for causing them to be simultaneously printed upon the two films.

10. Talking picture apparatus including a casing, means for simultaneously moving two independent sensitized films through the casing, a portion of the movement being intermittent while another portion of the movement is continuous, means for making a picture record upon the intermittently moving portion of one of the films, a slitted aperture being arranged opposite the continuously moving portion of the other film, a sound controlled light, means for focusing

the rays from the light through the slitted aperture, an opaque printing strip movable through the casing with the films and overlapping the same, the overlapping portions of the opaque printing strip being provided with two series of corresponding transparent identification characters, and means for projecting light upon the printing strip for causing the transparent characters to be printed upon the two films.

11. Talking picture apparatus including a casing, means for simultaneously moving two independent films through the casing, a portion of the movement being intermittent while another portion of the movement is continuous, means for making a picture record upon the intermittently moving portion of one of the films, a slitted aperture being arranged opposite the continuously moving portion of the other film, a lens for focusing light through the aperture, an electric lamp for the lens, a circuit for the light, a microphone, a circuit for the microphone, the two circuits having an electro-magnetic coupling so that the intensity of the light is controlled by the sound, and means for placing a series of corresponding identification marks upon the two films to facilitate assembly of the picture and sound records for a synchronous reproduction.

12. Talking picture apparatus including a casing, means for simultaneously moving two independent films through the casing, a portion of the movement being intermittent while another portion thereof is continuous, means for making a picture record upon the intermittently moving portion of one of the films, an aperture being arranged opposite the continuously moving portion of the other film, a lens for focusing light through the aperture upon the film, an electric lamp for the lens, a circuit for the lamp, a microphone, a microphone circuit, the lamp circuit and microphone circuit having an electro-magnetic coupling so that the intensity of light obtained from the lamp is controlled by the microphone, an opaque printing strip movable through the casing with the films and overlapping the same, the overlapping portions of the opaque printing strip being provided with two series of corresponding transparent identification characters, and means for projecting light upon the printing strip for causing the transparent identification characters to be printed upon the two films.

In testimony whereof I have signed my name to this specification in the presence of two subscribing witnesses.

HENRY C. BULLIS.

Witnesses:

EMORY L. GROFF,

ELSIE C. SMALL.

Jan. 3 1928 1,655,926

T. J. ENGEL

TALKING MOTION PICTURE

Filed Apr. 2 1923

Fig 3.

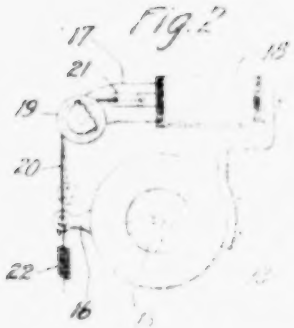

Fig. 2

Inventor:
Theodore J. Engel
by Jas. A. Palmer Atty

Patented Jan. 3, 1928. 1,654,926

UNITED STATES PATENT OFFICE.

THEODORE J. ENGEL, OF WOODSIDE, NEW YORK, ASSIGNOR TO WESTERN ELECTRIC COMPANY, INCORPORATED, OF NEW YORK, N. Y., A CORPORATION OF NEW YORK.

TALKING MOTION PICTURE.

Application filed October 2, 1923. Serial No. 666,157.

This invention relates to talking motion pictures and has for its object to coordinate the reproduction of sound and pictures from separate records.

This object is attained by photographically recording sound and pictures on separate films and under exposing corresponding portions of the films to produce blank spaces on the final records by means of which they may be matched for coordinated reproduction.

Referring now to the drawings, Fig. 1 discloses diagrammatically a photographic sound recorder and a photographic picture recorder equipped with shutters for interrupting the exposure; Fig. 2 is a detail view of the shutter and Fig. 3 shows speech and sound film records produced in accordance with the invention.

In Fig. 1, 10 represents a motion picture camera or similar photographic device for recording pictures on a continuous strip of film 10^a and 11 designates a photographic sound recorder wherein the intensity of a beam of light from a source 11^a is varied in response to sound waves to produce a record on a continuous strip of photographic film 11^b. The means for varying the light is not disclosed as it forms no part of this invention. Arranged adjacent the lens of the camera 10 in position to control the light admitted to the camera is a shutter 13. A similar shutter 14 is provided in the sound recorder and is arranged to control the beam of light to which the sound record film is exposed.

The shutters 13 and 14 which are disclosed diagrammatically in Fig. 1 are identical and the structure thereof is shown in detail in Fig. 2. These shutters are the same as the ordinary camera shutters except that the leaves 15 have been reversed so that the shutter remains normally open instead of closed. The leaves are operated by means of a lever 16 the same as in a camera shutter, a movement of the lever in one direction being effective to cause a closure and immediate opening of the shutter, the return movement of the lever having no effect.

To effect operation of the shutter, there is supported therefrom a frame 17 on which is mounted an electromagnet 18. Also supported by the frame 17 is a pulley 19 over which is trained a wire 20, one end of which is connected to the lever 16 and the other end of which is connected to the armature 21 of the magnet 18. A spring 22 exerts tension on the lever 16 to normally retain it in the full line position to permit operation thereof to the dotted line position under the influence of the pull exerted upon energization of the electromagnet 18. A battery 23 is provided to supply electrical energy for energizing the magnets and a switch 24 is arranged in circuit with the magnets and the battery for controlling the supply of energy to the magnets.

In the recording of pictures and sound with this apparatus, the switch 24 is closed at the starting of the recording, thus simultaneously closing the shutters 13 and 14 thereby momentarily preventing exposure of the sound and picture recording films. The recording of the pictures and sound is then continued in the ordinary manner, the switch 24 being closed at intervals at the discretion of the operator thereby simultaneously closing the shutters 13 and 14 and preventing momentarily, the exposure of the films. When the films are developed there will be corresponding blank spaces 25 and 26, Fig. 3 at the beginning of each film and at intervals throughout them corresponding to the under exposures. These blank spaces are so small that they do not materially affect the reproduction of the pictures or the sound but yet are of sufficient size that the films may be coordinated by matching the corresponding blank spaces.

It is, of course, understood that various modifications may be made in the structure of this apparatus without in any way departing from the spirit of the invention as set forth in the appended claims.

The invention claimed is:

1. In combination, a motion picture camera, a sound recorder comprising a light sensitive means, a normally opened shutter for

said camera and a normally opened shutter for said sound recorder, and means for simultaneously closing said shutters.

2. In combination, a motion picture camera, a sound recorder comprising a light sensitive means, a normally opened shutter for said camera and a normally opened shutter for said sound recorder, electromagnetic means for closing said shutters, and means for controlling the operation of said electromagnetic means.

In witness whereof, I hereunto subscribe my name this 27th day of September, A. D., 1923.

THEODORE J. ENGEL.

Aug. 7, 1928. 1,679,708

H. C. BULLIS

MOTION PICTURE STRIP

Filed Dec. 1, 1926

Fig. 1. Fig. 2. Fig. 4.

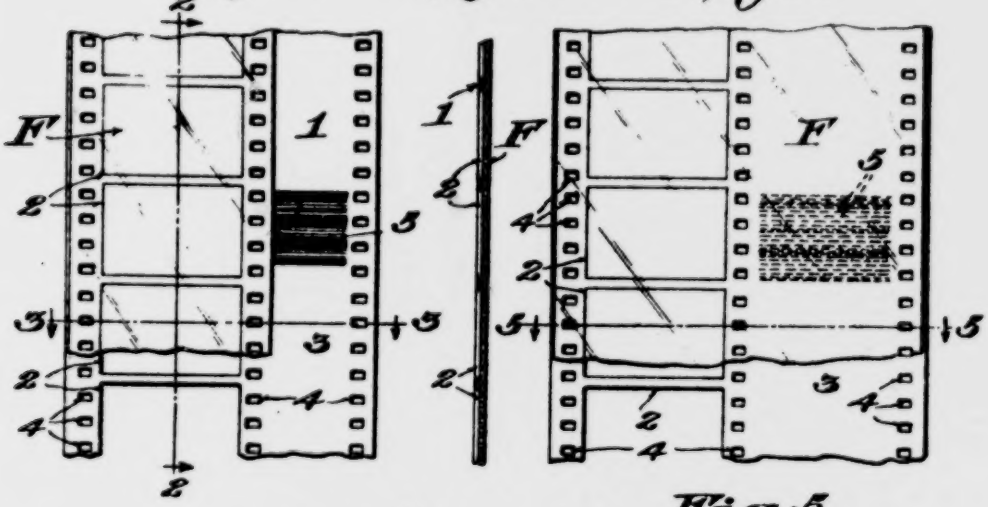

Fig. 3. Fig. 5.

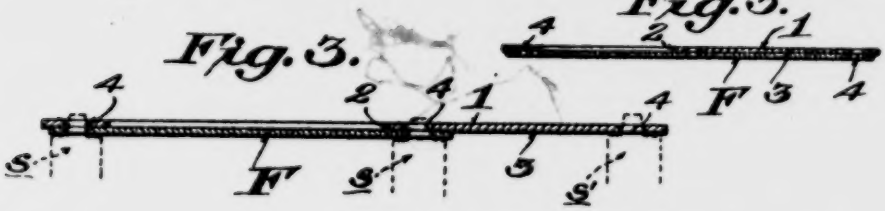

Inventor

Henry C. Bullis,

By D. F. Wolcott Jr.

Attorney

WITNESSES:-

Chas. L. Griesbauer

Emory R. Groff

Patented Aug. 7, 1928. 1,679,708

UNITED STATES PATENT OFFICE.

HENRY CHARLES BULLIS, OF WILMINGTON, DELAWARE.

MOTION-PICTURE STRIP.

Application filed December 1, 1926. Serial No. 151,969.

This invention relates to an improvement in film strips used in connection with motion picture machines, and more particularly to a strip including a combined sound and picture record, thus being adapted to produce the so-called talking pictures.

While it has been heretofore proposed to combine a sound and picture record photographically on the same film, it has been difficult to successfully carry out this scheme, chiefly for the reason that different manipulation and treatment of each record is required, in the developing of the picture record and sound record, to obtain the best results, and this is not possible where both records are photographically made on the same film. I have found that where the recording of the sounds is accomplished photographically, the two-film method as set forth in my Patent No. 1,335,651 of March 30, 1920, is the most practical when a photo-electric cell is used to reproduce the sounds, while the separate film method shown in my Patent No. 1,213,150, January 23, 1917, is preferred when it is desired to provide a metallic record of magnetic permeability from a photographic negative. However, it is also practical and desirable to provide a picture strip including a combined picture and sound record, which latter may be reproduced by an electro-magnetic inductive device such as employed in the well-known telegraphophone method.

Therefore, the present invention has primarily in view the provision of a picture strip having combined therewith a metallic sound record medium, whereby the speech sounds accompanying each picture may be accurately recorded together in proper synchronism and syntonism on the same strip, while at the same time providing for reinforcing and strengthening the film strip so that the same is not liable to become broken or torn in use.

Owing to the more or less fragile nature of the usual picture film, they are liable to break or tear, either from ordinary handling or by ruptures received when passing through the exhibiting apparatus.

Therefore, the invention also has as a further object the remedying of this difficulty by providing a celluloid picture strip with a metallic reinforcement thus providing a durable and substantial combined sound and picture record which will not become easily ruptured or broken in use, and which, although embodying metallic reinforcement, may be handled with the same facility as the ordinary celluloid film but with a much greater degree of safety.

With the above and other objects in view which will more readily appear as the nature of the invention is better understood, the same consists in the novel construction, combination and arrangement of parts hereinafter more fully described, illustrated and claimed.

A preferred and practical embodiment of the invention is shown in the accompanying drawings in which:—

Figure 1 is a plan view of a combined picture strip and metallic sound record.

Figure 2 is a longitudinal sectional view thereof taken on the line 2—2 of Figure 1.

Figure 3 is an enlarged cross-sectional view taken on the line 3—3 of Figure 1.

Figure 4 is a plan view of a modified form of the invention.

Figure 5 is a detail cross-sectional view taken on the line 5—5 of Figure 4.

Similar reference characters designate corresponding parts throughout the several figures of the drawings.

A novel and distinctive feature of the present invention resides in providing a sensitized picture strip, preferably of the usual celluloid composition, with a suitable metallic reinforcement which not only provides a substantial body or backing for the said picture strip, but at the same time constitutes a metallic record base which is susceptible of recording a sound wave produced by an electro-magnetic device which inductively records the fluctuations of sounds, in accordance with the well known telegraphophone principle. That is to say, the present invention proposes to combine a picture and sound record, by reinforcing the celluloid picture strip with suitable metallic reinforcement which constitutes a metallic medium susceptible of recording a magnetic sound record, and strengthening the film.

A practical and commercially feasible way of carrying these novel features into effect is illustrated in Figures 1, 2 and 3 of the drawings, wherein it will be observed that I have provided a metallic base 1 preferably in the form of a very thin steel tape or ribbon which is preferably of greater width than the ordinary celluloid picture film strip. This metallic base is provided with an alined series of windows or picture

apertures 2 at one side thereof, which are of the same general dimensions as a picture that is recorded on the usual motion picture strip, and is also provided with a metallic sound record margin 3 at one side of the series of alined picture openings. This sound record margin may be of any suitable width, but is preferably of less width than the picture strip as shown in Figures 1, 2, and 3. However, in Figure 4, the sound record margin is shown to be of substantially the same width as the picture strip portion so that the film may be adapted to a margin involving three equally spaced sprockets or a single sprocket having three sets of sprocket teeth. The sound margin 3 is adapted to receive metallic sound striations such as disclosed in my former Patent No. 1,213,150 aforesaid, so that the present film may be used on the same type of machine that is used to reproduce the form of record shown in the patent.

Accordingly, to the embodiment of the invention shown in Figures 1, 2, and 3, the metallic ribbon 1 has secured to one face thereof, by cement or otherwise, a sensitized celluloid picture film F which may extend to a point beyond the middle of intermediate rows of sprocket openings 4, thus leaving the sound margin 3 exposed, or on the other hand, as shown in Figure 4, the celluloid film may extend substantially across the entire width of the ribbon 1 to secure the advantage of a greater attaching area, thus adding to the strength and stability of the strip. This combined metallic backing and film is provided with the triple series of traction openings 4 as shown for engaging the film advancing drums of the reproducing device in the well-known manner. Accordingly, when the sensitized film is attached to the metallic base or support, it will be clear that the same is provided with such reinforcement as will greatly strengthen the film while at the same time providing a metallic record at one side of the picture apertures which is susceptible of recording and reproducing a sound record produced or reproduced by a suitable electromagnetic device. As shown in Figure 3, wherever it is necessary for the sprocket means to engage with the side of the ribbon carrying the film, the sprocket S' may be made of larger diameter than the sprocket S, to compensate for the relatively stepped cross sectional formation of the ribbon.

As previously indicated, this construction provides a strip which may be readily used with the triple sprocket traction devices used on the machine for reproducing the sound record made in accordance with the method disclosed in my Patent No. 1,213,150. And, in this case, the sound recording device is preferably of such a nature that the sound waves are recorded in a series of transverse lines 5 across the width of the metallic sound record portion 3.

From the foregoing, it will be apparent that regardless of the particular structure utilized in carrying out the invention, the same general principle is involved in each instance. That is to say, in each type of structure shown in the drawings, a sensitized picture film strip is reinforced and supported by a suitable metallic element or elements which extend throughout the length of the film, and which metallic element or elements may be utilized to carry a sound record at one side of the picture recording record, and parallel therewith.

Without further description, it is thought that many features and advantages of the present invention will be readily apparent, and it will also be understood that various changes in the form, proportion, and minor details of construction may be resorted to without departing from the spirit of the invention or scope of the appended claims.

I claim:—

1. A combination sound and picture record strip including a metallic ribbon having a plurality of picture apertures and traction openings on each side thereof, and also having a relatively wide sound recording margin parallel to the picture apertures, said margin also being provided with traction openings at its outer edge, and a film carried by the said ribbon and being substantially co-extensive therewith.

2. A combination sound and picture record strip including a metallic ribbon having a plurality of picture apertures extending partially across the width thereof and bounded on each side by a line of traction openings, the said strip being also provided with a third row of traction openings lying adjacent one edge and the area of the ribbon between the last mentioned traction openings and the traction openings at the inside edge of the picture apertures constituting a relatively wide sound recording zone, and a picture film carried by the metallic ribbon and covering the picture apertures.

3. A combination sound and picture record strip including a metallic ribbon having a plurality of picture apertures and traction openings on each side thereof and at the intermediate portion, said ribbon also having a relatively wide margin parallel to the picture apertures and adapted to receive a magnetic sound record, and a picture film carried by said metallic ribbon and overlying the picture openings therein.

In testimony whereof I hereunto affix my signature.

HENRY CHARLES BULLIS.

R. M. CRAIG.

MOVING PICTURE MACHINE

APPLICATION FILED AUG. 12, 1914.

1,260,338.

Patented Mar. 26, 1918.

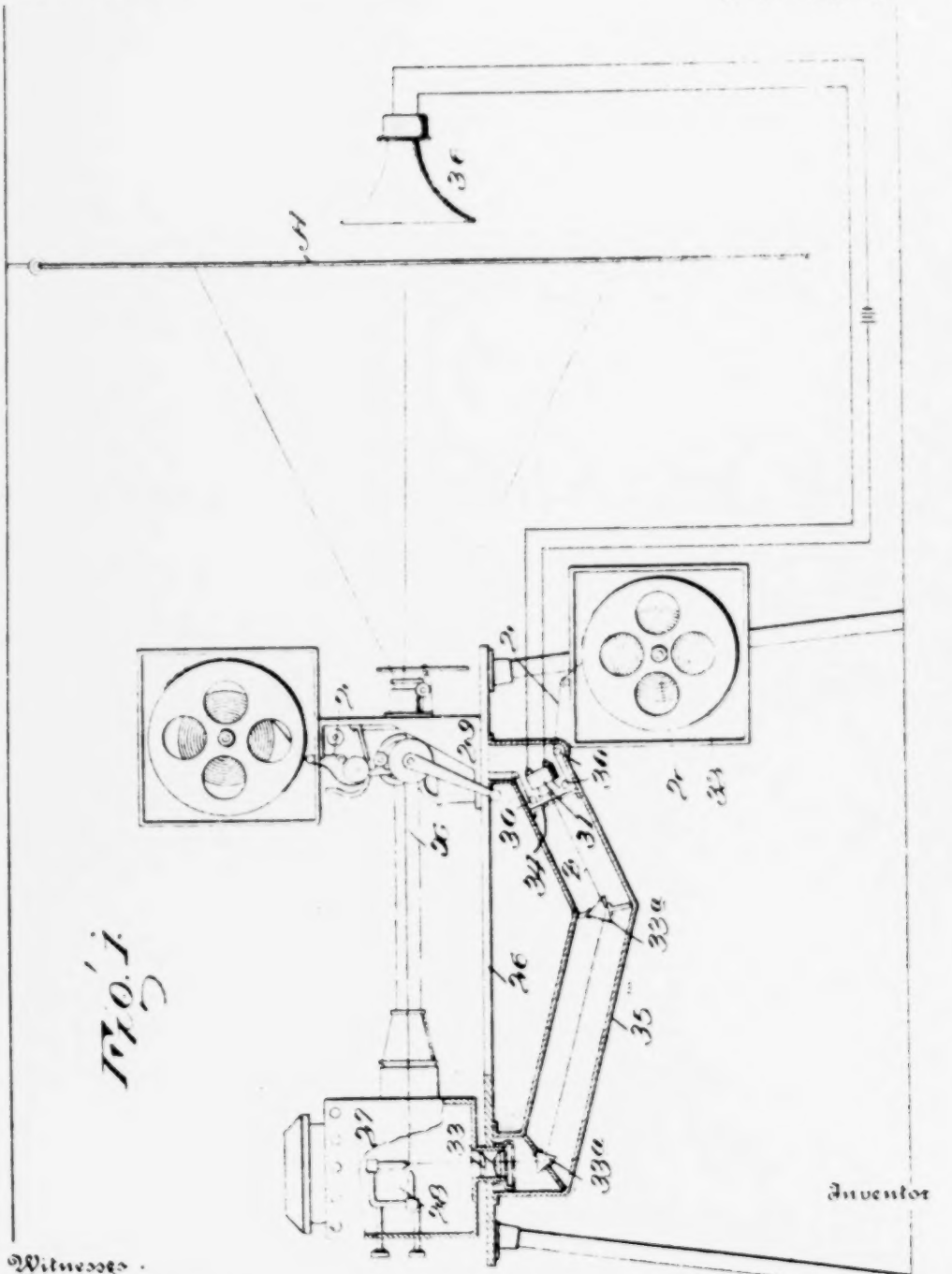

Witnesses.

Inventor

R. M. Craig

By Attorneys.

R. M. CRAIG.

MOVING PICTURE MACHINE.

APPLICATION FILED AUG. 12, 1914.

1,260,338.

Patented Mar. 26, 1918.

2 SHEETS. SHEET 2.

Fig. 2.

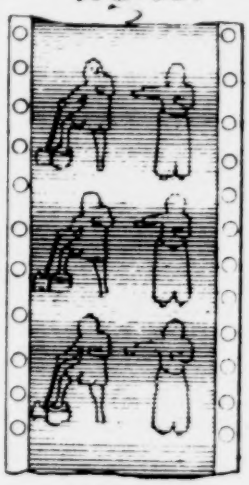

Fig. 7.

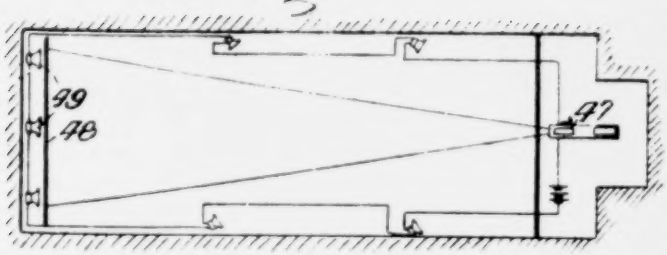

Fig. 3

Fig. 5.

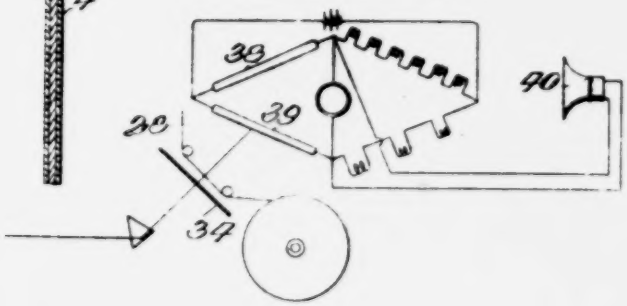

Fig. 8.

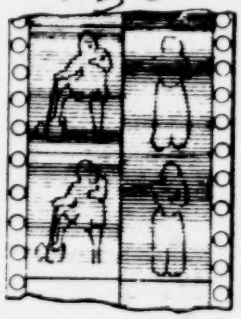

Fig. 4.

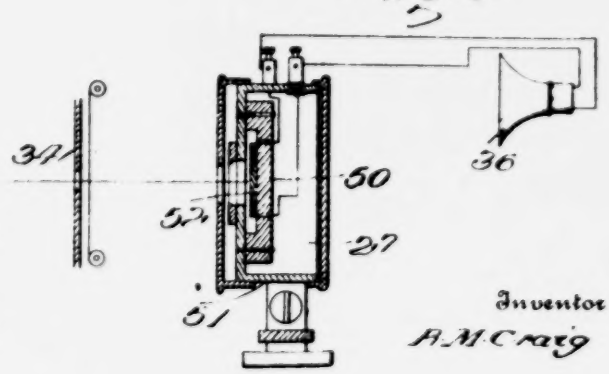

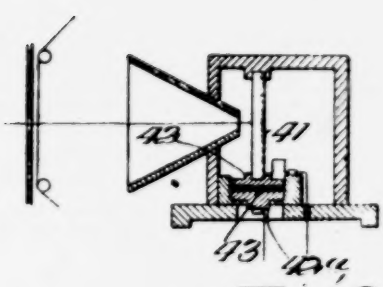

Fig. 6

Witnesses

W. Zamare

W. N. Woodson.

Inventor

R. M. Craig

By

[illegible]

Attorneys

UNITED STATES PATENT OFFICE.

RICHARD M. CRAIG, OF SAN ANTONIO, TEXAS.

MOVING-PICTURE MACHINE.

1,260,338. Specification of Letters Patent. Patented Mar. 26, 1918.

Original application filed May 8, 1913, Serial No. 765,959. Divided and this application filed August 12, 1914. Serial No. 856,420.

To all whom it may concern:

Be it known that I, RICHARD M. CRAIG, citizen of the United States, residing at San Antonio, in the county of Bexar and State of Texas, have invented certain new and useful Improvements in Moving-Picture Machines, of which the following is a specification.

My invention relates to phonographic or "talking" moving pictures, and more particularly to the art of taking and projecting such moving pictures with the accompaniment of sound recording and sound reproduction respectively.

Many attempts have been made to secure with the reproduction of moving pictures, the reproduction of sounds correlated therewith. Almost all these attempts have been made by operating the moving picture film in conjunction with the ordinary phonograph or gramophone. The difficulty of using an instrument of this character to reproduce sounds correlated with the film is that the phonograph must of necessity be practically a separate machine from either the camera whereby the pictures are taken, or the projector whereby they are thrown upon the screen, and that with either the gramophone or the phonograph it is practically impossible to secure a sound record which shall be conterminus with the moving picture film. The maximum sound record as used today will not run for longer than five minutes, whereas the moving picture scene may be very much longer. Further than this, it is practically impossible to run the phonograph or gramophone in synchronism with the film and this is a very vital necessity for the proper correlation of the sound record with the pictures. Again, if the film runs off or breaks, the phonograph must be stopped, and it is almost impossible to again adjust the film in proper correspondence and correlation with the sound record. The mere connecting up of the sound reproducing mechanism with the mechanism of the moving picture machine will not secure a complete correspondence and correlation between the sound and the pictures, for the reason that the film is liable to slip and to tighten or loosen upon the reels, and it would be extremely hard to adjust the film so as to correspond accurately with the motion of the picture. An accurate correspondence of the sound with the event with which the sound is correlated, is, of course, absolutely necessary to prevent a disjunction which would entirely spoil the effect.

Furthermore, the phonographic record can naturally contain only so many words and this requires the film to be made of a certain length only, this length corresponding with the phonographic record, instead of which the sound record should be made for and with the picture record of any possible scene or happening that might occur, and the sound record should have the same length as the scene record and not be limited as to length.

Again, the process of making phonographic records requires extra care and especially prepared staging. The phonograph requires an extra attendant to place the records thereon. Furthermore, the picture record and the sound record have heretofore been taken separately and could not therefore be in accurate correspondence, nor could they ever be placed in accurate correspondence under these circumstances. It is a very difficult problem and requires elaborate arrangement of costly mechanism to keep a film synchronized with a phonographic record. If the film happens to run off while exhibiting the phonographic record and the pictures on the film get out of time, it is practically impossible to get them in time again. If the film should happen to get torn in two or broken, which sometimes happens, and the film is cemented together, the words corresponding to the part torn out of the film can never be taken from the phonograph record, and this destroys the further use of the two together.

The primary object of my invention is the provision of mechanism whereby a sound record film of the form shown and claimed in my pending application for patent, Serial No. 765,959, filed May 8, 1913 (of which case the present application is a division) may be reproduced synchronously with the reproduction of moving pictures.

A further object is to so form sound reproducing mechanism that it will reproduce the films illustrated and described in my above named application with only a slight change being necessary in the mechanism now used for producing moving pictures.

A further object is to provide reproducing means so constructed that a film may be

used as both the picture record carrier and the sound record carrier and in which the pictures and the corresponding sound records are so arranged on the film that they shall be at all times in fixed relation to each other and reproduced simultaneously and without chance of the sound record having its relation to the picture record changed.

A further object is to so form the reproducing apparatus that sound records may be translated into electrical vibrations and these in turn carried to various parts of a hall within which the machine is to be used.

A further object is to so construct the machine for reproducing the picture and accompanying sounds, that the manner of operation shall be extremely simple, both as regards the reproduction of the sound records and the reproduction of the moving pictures.

Still another object is to so construct the mechanism for reproducing the sound record in conjunction with the projection of the moving pictures that while the film shall move at one point intermittently to reproduce the pictures, the film shall move steadily at one point to reproduce the sound record and in this connection to provide mechanism for causing the projection of a certain class of light rays through that portion of the film which is moving intermittently, causing the display of moving pictures, and causing the projection of another class of light rays through that portion of the film which is moved steadily whereby to reproduce the sound record, and further, in this connection, to provide in combination with means for projecting one class of rays through said film, sound reproducing mechanism of such character as to be operated by the action of these rays.

Still another object of my invention is the provision of a machine adapted to project moving pictures and sound records simultaneously including means for projecting rays of invisible light through a portion of a film and projecting rays of visible light through another portion of the same film, the rays of the visible light producing the ordinary moving pictures on a screen while the rays of the invisible light act upon sound reproducing mechanism.

My invention is illustrated in the accompanying drawings wherein:—

Figure 1 is a view partly in section of my improved apparatus for projecting moving pictures and reproducing sound.

Fig. 2 is a face view of a portion of a combined moving picture and sound record film.

Fig. 3 is a transverse section of such a film.

Fig. 4 is a diagrammatic view partly in section of a "Bi-Ag" thermopile.

Fig. 5 is a diagrammatic view of a bolometer which may be used for the purpose of translating invisible light variations into sound vibrations.

Fig. 6 is a diagrammatic view of the Edison tasimeter which may be used for the like purpose.

Fig. 7 is a plan view of a moving picture theater, showing the arrangement of the telephone receivers therein.

Fig. 8 is a view similar to Fig. 2, illustrating another form of film.

My invention is based upon the fact that infra-red rays are invisible but that these rays will affect a properly sensitized photographic film, and that these infra-red rays will affect various forms of electrical phonographic receivers or sound transmitting devices. Infra-red rays may be passed through an ordinary photographic film or the film of a moving picture without being visible and without interfering with the proper projection of the picture by moving picture projecting apparatus. If a picture strip is prepared, therefore, having on one side the ordinary photographic reproductions of pictures, and on the other side a phonographic sound record capable of being reproduced only by the infra-red rays, the sound record will not interfere with the passage of white light to and through the pictures and the presence of the pictures will not interfere with the passage of infra-red rays through the strip. On one side of the film, or the strip, therefore, would be the ordinary picture record and on the other side would be a printed photographic record of sound, which record would be transparent to ordinary visible light but which record would more or less intercept the infra-rad rays to produce variations in the projection of these rays, these variations being used to affect sound transmitting apparatus as will be later stated. Infra-red rays are below the ordinary visible spectrum. They are invisible to the naked eye and are very penetrating and are subject to the same optical laws as ordinary light.

In my pending application Serial No. 765,959, filed May 8, 1913, I have fully described a film which may be used for this purpose and which carries upon it on one side a sound record through which visible rays may pass without obstruction and upon the other side a picture record through which the invisible rays may pass without obstruction.

In Fig. 3 I show a portion of a film or strip of moving pictures in which 2 designates the body of the film, 3 a coating upon which the photographic print is taken and 4 a coating of substance which is not capable of being acted upon photographically by ordinary light and which will act as a medium to carry a substance which will in turn act to intercept either partially or entirely said

infra-red rays. In said application I have also fully described and illustrated means whereby the combined picture record and sound record are taken.

My present invention relates entirely to the means for reproducing the combination sound record and picture film.

Generally speaking, for the reproduction of the picture record and the sound record, ordinary white light is passed through the picture record while the infra-red rays (invisible to the eye) are passed through the sound record and fall upon suitable instruments to be hereafter described whereby these infra-red rays will cause the reproduction of sound vibrations. There are a number of instruments that are sensitive to infra-red rays. The tasimeter invented by Thomas A. Edison will measure heat accurately down to the ten-thousandth part of one degree, but this instrument is probably too sluggish for the purpose of reproducing sound record. The selenium cell when sensitized by Abney's process is sensitive to infra red rays and may be used for the purpose. I believe, however, that the bolometer is best adapted for the purpose for several reasons, but principally because the element upon which the light falls can be made more nearly to coincide with the small horizontal lines of the photographic sound record. The width of the horizontal lines of the sound record would be regulated according to the speed of the film.

In the reproducing apparatus such as is hereafter described, infra-red rays are projected against the film containing the sound record and the picture record by suitable prisms such as prisms of rock salt, fluorite or Jena glass and focused through a narrow slit onto the film and after passing through the film fall on the reproducing instrument such as the bolometer. Connected in series with the bolometer or through similar apparatus would be loud-speaking phones such as the auristophone, the Edison or the Durceret loud-speaking phones.

Moving pictures are reproduced by intermittently moving the film. It is therefore plain that it would be impossible to use this film during its intermittent motion or at the point through which the white light rays are projected for the purpose of reproducing the sound record, it being plain that the sound record must be reproduced as it was taken, namely, by a continuous and uninterrmittent movement of the film. I overcome this difficulty therefore, by passing the infra-red rays through the film at a point on one side or the other of the point where the picture projecting rays are passing through, that is, at a point where the film is moving continuously and steadily.

An apparatus whereby the moving pictures may be projected and the sound record synchronously reproduced, is illustrated in Fig. 1. This figure shows an ordinary moving picture projecting apparatus comprising a table or base 26 supported in any suitable manner and supporting upon it the lamp housing 27 wherein there is disposed the ordinary right angle arc lamp 28 such as used in moving picture machines. Such a right angle arc is particularly adapted as a source of infra-red rays, while supplying at the same time the ordinary white light for the pictures. The light is projected from the lamp housing in any usual or suitable manner onto the film 2. This film is unrolled from an upper film reel and passes down through the usual moving picture projector 29. This mechanism contains means for intermittently shifting the film while the shutter of the mechanism is closed. Inasmuch as there are various types of this mechanism and it is thoroughly well known, it is not deemed advisable to describe the mechanism in detail.

The white light after passing through the film 2 is projected onto a screen A in the usual manner. The film after it passes below the aperture plate of the moving picture machine no longer moves intermittently but is shifted continuously and I have illustrated the film 2 as being passed around a series of rollers 30 and in front of the aperture of a selenium cell or like apparatus, this cell being designated 31. After passing in front of the aperture of the selenium cell the film 2 passes around a lower or receiving reel 32 which may be connected up with any suitable mechanism whereby the reel may be rotated continuously in a direction to wind up the reel 2 at a suitable rate of speed.

Disposed immediately below and in line with the meeting point between the carbons of the angular arc lamp 28 there are series of lenses 33. These lenses are preferably made of rock salt or fluorite or dense cobalt glass. The infra-red rays passing through these lenses 33 are transmitted by means of prisms 33ª of Jena glass or other suitable material to the aperture of the selenium cell 31. A diaphragm 34 is so disposed as to cause these rays to fall in the form of an elongated narrow or transversely extending beam upon the face of the selenium cell 31. Preferably the lenses 33 and the prisms 33ª are contained within a casing or housing 35.

The selenium cell 31 is formed in any usual or suitable manner and requires no particular description as it is the ordinary form of cell except that preferably the cell is treated by Abney's process so as to make it extremely sensitive to the infra-red rays. Mounted behind the screen or in any suitable portion of the exhibition hall is a loud-speaking phone designated 36 in Fig. 1.

This is a loud-speaking electric telephone and is connected in circuit with the selenium cell 31.

The operation of the picture and sound reproducing apparatus illustrated in Fig. 1 is of course obvious. The pictures are reproduced in the usual manner, but after the strip or film has passed beyond the specific moving picture mechanism, the strip passes in front of the selenium cell and the transverse bands or lines of the sound record on the film will act to more or less intercept, absorb, reflect or otherwise stop or impede the passage of the infra-red rays. Where the infra-red rays fall with full force upon the selenium cell, the cell will have a certain degree of electrical resistance. Where the infra-red rays are intercepted or their intensity changed in any manner, the electrical resistance of the selenium cell will vary correspondingly. There will therefore be a continual variation of the electrical resistance of the cell as the record film passes in front of the cell, and this continual variation of resistance will, in a manner well known, affect the mechanism of the telephonic translator 36 and thereby cause vibrations of the air corresponding to the sound vibrations and the sound will be reproduced. All of the mechanism heretofore described is well known by itself. The photophone operates on the same principle as the sound reproducing mechanism heretofore described, but using ordinary white light.

Inasmuch as sound reproductions may be secured by a large variety of electrical apparatus, affected by variations of rays falling upon it, I do not wish to be limited to the use of a selenium cell or any other specific apparatus for the purpose of translating the photographic sound records into air vibrations as any other mechanism having the same general function may be substituted for the selenium cell.

For purposes of illustration, I have shown in Figs. 5 and 6 two other forms of mechanism adapted to translate the vibrations of light rays into sound. Fig. 5 illustrates the bolometer as used for this purpose. The bolometer will measure heat accurately down to the ten-millionth of a degree. In Fig. 5, 38 and 39 indicate two thin platinum strips forming the two arms of a Wheatstone bridge normally in perfect balance. The infra-red rays passing through the film 2 in the form of a thin beam fall on one of these arms or strips, namely the strip 39. This disturbs the balance of the bridge. This Wheatstone bridge is connected as illustrated in the diagram to a telephonic translator 40 which is the translating device of any one of the loud-speaking phones previously referred to. The current passing through this translator will vary in correspondence with the variations of the red rays falling upon the strip 39 and therefore the photographic sound record will be reproduced as air vibrations. The action of this instrument is virtually instantaneous in its operation and extremely sensitive.

Fig. 6 is a diagram of the Edison tasimeter which may also be used for the purpose of translating photographic records into sound vibrations. In this figure, 41 illustrates a rod of vulcanite supported against a fixed abutment at one end and at the other end abutting against a movable disk 42. This disk bears in turn against a carbon button 43 disposed between the movable disk 42 and a fixed disk of metal 42^a. The two metal disks 42 and 42^a are connected in circuit to a loud-speaking phone 45 the current passing more or less between the disks 42 and 42^a through the carbon button as it is compressed. The variations in these red rays cause this vulcanite to contract and expand thus compressing the carbon button 43 between the metal pieces 42 and 42^a, causing variations in the current corresponding to the variations in the strength of the rays. This is extremely sensitive and forms one means of translating the photographic record into sound vibrations.

While I have illustrated three forms of electrical sound reproducing apparatus, I wish it understood that I may use other forms. Thus I might use a thermopile, especially a "Bi-Ag," a selenium cell made sensitive to infra-red rays by Abney's process, or any other delicate heat measuring instrument of like character.

While in Fig. 1 and Figs. 4 and 5 I have shown only one telephonic translator, this translator being shown in Fig. 1 as being disposed behind the screen A, it will be understood that with the electrical sound reproducing apparatus 1 may use a plurality of such translators disposed at various portions of an amusement hall, not only behind the screen but at the sides of the hall. This is obviously of great advantage and is not possible where ordinary sound reproducing mechanism is used.

Such an arrangement of phones is illustrated in Fig. 7 wherein the picture and sound projecting apparatus is designated 47 and illustrated diagrammatically, the picture being received upon the screen 48. As illustrated, there are three loud-speaking telephonic translators 49 disposed behind the screen 48 and a plurality of loud-speaking translators disposed along the side of the hall and facing toward the audience. Thus the sounds reproduced may be distinctly heard by everybody in the audience. While I have illustrated in Fig. 7 all of the phones as being connected in one circuit and as being actuated by one selenium cell, bolometer

or tasimeter, it is to be understood that when a film like that shown in Fig. 8 is used with two records placed in parallel position upon the film, a plurality of sets of sound reproducing apparatus is to be used. Thus, in this last case, there will be two beams of infra-red rays projected through the film, each falling upon a separate bolometer, tasimeter or like apparatus, and each such reproducing mechanism being electrically connected to one of a series of sets of phonographic transmitters. By using the film above referred to, a dialogue may be reproduced so that the sounds will issue from translators set at opposite sides of the hall or at opposite points behind the screen, thus causing the dialogue to seem more natural than if it apparently issues from one point only. It is obvious that a larger number of records could be placed upon the same film and thus the sounds be caused to issue from a plurality of points behind the screen or around the hall.

The two main features of my invention upon which the invention is based are in the first place the provision of a film capable of receiving not only the photographic prints of the pictures to be projected, but also the photographic record of the sound and the use with these films of invisible rays for the purpose of reproducing the sound record. The other important and vital feature of my invention resides in the provision of means whereby the sound record may be taken from that portion of the film which is moving continuously while that part of the film through which the rays of white light are projected is moved intermittently.

In printing the sound record upon the strip or film 2, the sound record is started a sufficient distance beyond the starting point of the picture record so that at the instant that any one event is being projected on the line x, the sound record corresponding to this event is passing the axis of line Z. Inasmuch as in taking or making the picture record and the sound record two separate negative films or strips are used, it is entirely possible in printing these records upon the film 2^a to displace the sound record with relation to the picture record in the manner stated. While I have shown the axis Z of the infra-red beam as being about twelve inches below the axis x of the white light beam, I wish it understood that the two axes may be much nearer than this and that the drawing in Fig. 1 is purely illustrative in this regard, and further that I may pass the infra-red rays through the strip 2 above the picture projecting mechanism and above the axis x.

While I have referred to the lenses and prisms for focusing and transmitting the invisible rays as being made of rock salt, or Jena glass, it is of course obvious that they may be made of other material such as fluorite, or dense cobalt glass, or that I may use metallic reflectors for deflecting the invisible rays along the line Z.

By using a film having thereon a plurality of sound records, great naturalness could be secured as before stated by the fact that the transmitters translating the variations in the sound record into sound vibrations, could be located nearer to or farther from the inner side of the screen, or could be located on opposite lateral sides of the screen or stage so that the voice will apparently be projected in accordance to the position of the actors in the moving picture. It is obvious also that in place of using a camera having a megaphone for transmitting sounds to the "speaking arc" or the manometric flame, sensitive microphone transmitters might be used at various portions of a stage upon which actors were acting a moving picture play, and that the vibrations of these microphones could be transmitted electrically to diaphragms placed within a camera to thereby transmit the sounds proceeding from the several microphones to the several flames or speaking arcs to be recorded in separate columns upon the sound record film.

In Fig. 4 I show diagrammatically a "Bi-Ag" thermopile as above referred to. As this themopile is well-known an extended description is not necessary. The thermopile consists of a frame 50 having an opening at its middle and extending across this opening are a plurality of copules 52 composed of connected bismuth and silver wires. These couples are joined by overlapping plates of tin, the junctions formed by the plates being covered with platinum black. The frame 50 with its couples of platinum and silver is supported inside of a casing 51 having a narrow slit through which the infra-red rays are projected upon the junction plates. The couples of silver and bismuth are connected in circuit with a receiver of a loud-speaking telephone in the manner heretofore described. A thermopile of this character is fully described in Bulletin No. 4 issued by the Bureau of Standards on Instruments and Methods of Radiometry. Therefore no extended description of the thermopile is necessary.

In case the talking picture machine before described is desired to be used in very large theaters where it would take a sound a perceptible time to travel the distance and where it would be possible to see the picture, therefore, before hearing its corresponding sound, the following arrangement could be made. After the system has been brought to a standard the instrument sensitive to the infra-red rays would always be just a certain distance from the lens or just a certain number of pictures below the lens. In

a large theater, therefore, it would be only necessary to slightly advance the instrument, that is, move it a bit nearer to the lens, in which case the sound of a given event would slightly precede the picture but the sound would reach the observer at the same time that the picture was shown.

Having thus described the invention, what is claimed is:—

1. In apparatus for the reproduction of a sound and picture record in the nature of a film transparent to visible and invisible light, said film having thereon a photographic picture record adapted to permit the free passage of rays of invisible light but to intercept or affect the passage of rays of visible light and having thereon a sound record composed of a substance adapted to permit the free passage of rays of visible light but intercept or affect the rays of invisible light, comprising means for intermittently moving one portion of the film, means for steadily moving another portion of the film, means for projecting a beam of visible light through the intermittently moving portion of the film, means for projecting a beam of invisible light through the steadily moving portion of the film, and means in the path of said last named beam for translating the light variations of the beam into sound vibrations.

2. Means for reproducing moving pictures and corresponding sounds from a film transparent to visible and invisible light rays and having on one side thereof a series of consecutive photographic pictures adapted to permit the free passage of invisible rays but intercept or affect the passage of visible rays of light and on the other side a sound record adapted to permit the free passage of rays of visible light but intercept or affect the passage of invisible rays, including a source of visible light rays, means for intermittently moving the film across a beam of light proceeding from said source to thereby project moving pictures, a source of invisible rays, means for steadily moving the film across a beam proceeding from said source of invisible rays to thereby project the sound record, and means in the path of said last named rays after they pass through the film adapted to translate the variations of intensity in said beam of invisible rays into sound vibrations.

3. Means for reproducing moving pictures and corresponding sounds from a film having on one side thereof a series of consecutive pictures designed to affect the passage of visible rays but permitting the free passage of invisible rays and having on the other side thereof a sound record adapted to affect the passage of invisible rays but permit the free passage of visible rays, including a source of visible rays and a source of invisible rays, means for intermittently moving the film across a beam proceeding from the source of visible rays, means for steadily moving the film across the beam of rays proceeding from the source of invisible rays, a telephonic translator, and a receiver upon which the beam of invisible rays fall, said receiver being connected in circuit with the telephonic translator, the resistance or conductivity of the receiver being altered by being subject to invisible rays.

4. Means for reproducing moving pictures and corresponding sounds from a film including a source of light, means for projecting visible light rays from the said source of light, means for projecting invisible rays from the said source of light in a path separate from the path of the visible rays, the said film having thereon a series of consecutive photographic pictures adapted to intercept or affect the passage of visible rays and having a sound record adapted to permit the free passage of visible rays but to intercept or affect the passage of invisible rays, means for intermittently shifting the film across the path of the visible rays to thereby project the moving pictures, and means for steadily moving the film across the path of the invisible rays to thereby project the sound record, means for translating the variations in the invisible rays into sound comprising a receiver electrically sensitive to the action of invisible rays, and a translator electrically connected to said receiver.

5. Reproducing apparatus for use in connection with a transparent film having thereon a plurality of sound records formed of a substance intercepting or affecting the passage of invisible rays, including means for steadily moving said film, of a receiver adapted to have its electrical conductivity or resistance varied by the action of invisible rays, means for projecting invisible rays through said film upon said receiver, and a plurality of telephonic translators connected in circuit with said receiver.

6. In an apparatus of the class described, means for projecting visible and invisible light rays synchronously through a film record movable in the path of both of said rays, said film bearing picture and sound records, the picture record being capable of affecting the passage of the visible light rays through the film and the sound record being capable of affecting the passage of invisible light rays through the film, the said sound record permitting the unobstructed passage of the visible light rays through the film.

7. Means for reproducing sound in connection with moving pictures synchronously from a film having a consecutive series of picture records and a correlated sound record, the picture record being transparent to invisible rays but affecting visible rays, the sound record unaffecting the visible rays

but affecting the passage of invisible rays, the sound record correlated with any specific event on any one picture of the series being longitudinally spaced therefrom along the film, a source of white light, a source of light rays beyond the visible spectrum, means for passing said film in the paths of the visible and invisible rays, and means acted upon by the invisible rays passing through the film for translating the variations in intensity of said invisible rays into sound vibrations.

8. An apparatus for projecting moving pictures and simultaneously reproducing sound including a source of visible and invisible rays, means for projecting a beam of visible rays, means for projecting a beam of invisible rays, means for passing a combined picture and sound record film successively past the beam of visible and the beam of invisible rays, and means for translating the variations in intensity of the invisible rays into sound vibrations.

9. An apparatus for projecting moving pictures and simultaneously producing sound comprising a source of light, means coacting with the source of light for projecting the visible light rays therefrom, means for intermittently moving a combined picture and sound record film through the beam of visible rays, means for projecting the picture formed by said beam upon a screen, means for projecting a beam of invisible rays, electrical sound reproducing devices including an element sensitive to the action of invisible rays, and means for passing said film intermittently through the beam of invisible rays.

10. An apparatus for reproducing sound from a film having thereon a consecutive series of sound wave impressions, said impressions being adapted to obstruct or impede the passage of invisible light rays, including means for projecting a beam of invisible light rays through said film, means for moving the film steadily past said beam, and means for translating the variations in the intensity of said beam caused by the variations in said record into sound vibrations including an element sensitive to the action of rays of invisible light and re-acting according to the intensity of said rays.

11. Apparatus for reproducing moving pictures and related sounds from a moving film record having on one side thereof a picture record designed to affect the passage of visible light rays and having on the other side thereof a sound record designed to affect the passage of invisible light rays and permit the free passage of visible rays, including means for projecting visible light rays through the film, means for projecting invisible light rays through the film, and means for translating the invisible light rays into sound vibrations.

12. Apparatus for reproducing moving pictures and related sounds from a moving film record having photographic and photophonographic records designed respectively to affect the passage of visible and invisible light rays, including means for projecting visible light rays through one part of the film, means for projecting invisible light rays through another part of the film, and means for translating the invisible light rays into sound vibrations.

13. The method of translating composite sound and related picture records from a moving picture film having on one side thereof a picture record designed to affect the passage of visible light rays and on the other side thereof bearing a sound record designed to affect the passage of invisible light rays and permit the free passage of visible rays, which consists in intermittently moving the film at one portion thereof, steadily moving the film at another portion thereof, projecting light rays through the film at the intermittently moving portion thereof to display the pictures thereon, and projecting invisible light rays through the steadily moving portion of the film and translating the variations of the invisible rays into sound vibrations.

14. The method of translating composite sound and moving picture film records, which records are designed respectively to affect the passage of invisible and visible light rays through the film, which consists in intermittently moving the film at one portion thereof, steadily moving the film at another portion thereof, projecting visible light rays through the intermittently moving portion of the film, projecting invisible light rays through the steadily moving portion of the film, directing the last-mentioned rays upon an element adapted to have its conductivity or resistance vary to correspond to the variations of said light rays and translating said variations in conductivity or resistance into sound vibrations.

15. Apparatus for reproducing moving pictures and related sounds from a moving film having on one side thereof a picture record designed to affect the passage of visible light rays and on the other side thereof a sound record designed to affect the passage of invisible light rays and permit the free passage of visible light rays including means for suitably moving the film record to permit of translation of the picture and sound records therein, means for projecting visible light rays through the film, means for projecting invisible light rays through the film, and means for translating the invisible light rays into sound vibrations.

16. Apparatus for reproducing moving pictures and related sounds from a moving film having on one side thereof a picture record designed to affect the passage of visi-

ble light rays and on the other side thereof a sound record designed to affect the passage of invisible light rays and permit the free passage of visible light rays including means for intermittently moving a portion of the film and a take up means for the film arranged to move the displayed portion continuously, means for projecting visible light rays through the intermittently moving portion of the film, means for projecting invisible light rays through the displayed and continuously moving portion of the film, and means for translating the invisible light rays into sound vibrations.

17. Means for reproducing moving pictures and related sounds from a moving film having on one side thereof a picture record designed to affect the passage of visible light rays and on the other side thereof a sound record designed to affect the passage of invisible light rays and permit the free passage of visible light rays including a single source of light, means for separating the visible and invisible light rays emanating from the source of light and directing the same through spaced portions of the film, and means for translating the invisible rays into sound vibrations.

In testimony whereof I affix my signature in presence of two witnesses.

RICHARD M. CRAIG. [L. S.]

Witnesses:

JOSEPH SHORE,

J. W. SCHUCHARDS.

2212

Plaintiff's Exhibit No. 32.

Bescheinigung.

Die Herren Hans Vogt in Berlin-Schöneberg, Joseph Massolle in Berlin-Friedenau und Dr. Joseph Engl in Berlin-Grunewald haben im Deutschen Reiche ein Gesuch um ein Erfindungspatent für

"Photophonetischer Begleitfilm für stumme bildmäBige Handlungen"

2213

am 2. April 1919 beim Reichspatentamt hinterlegt.

Das angeheftete Stück ist eine richtige und genaue Wiedergabe der ursprünglichen Unterlage dieser Patentanmeldung.

Berlin, den 5 Oktober 1932.
Der Präsident des Reichspatentamts.

I. V.
Lübcke

2214 (Seal)

V. 14 634 IX/57 a 2.

Phonetischer Beleitfilm für stumme bildmässige Handlungen.

Im Gebiete der "stummen" Kinematographie warden bis jetzt die notwendigen Bilderläuterungen entweder akustisch durch vortragende Personen oder optisch durch Mitzprojizieren von Schriften, Zwischenbildern oder Ahmlichem

gegeben. In dem meisten Fällen wurden die stumme Bildvorführung auch durch das Spiel von Musikkapellen oder mechanischen Musikwerken belebt.

Die Nachteile dieser Erläueterungsund Belebungsmittel sind bekannt.

Im Gebiete der "tönenden" Kinematographie, bei Verfahren, die gleichzeitig mit der kinetographischen Registrierung auch eine photographischen Fixierung der Töne ermöglichen und neuartige elektroakustische Reproduktionsmittel anwenden, sind die oben angeführten Mängel beseitigt. Die Praxis zeigte aber, dass bei einer Reihe von kinetographischen Massnahmen die synchrone Mitaufnahme des Klangereignisses bei der Bildaufnahme teils nicht erwünscht, teils nicht möglich ist .Z.B. wäre es nicht vorteilhaft, eine in der Darstellung von Pantominen gut arbeitende, aber mit einem schechten Sprachorgan ausgerüustete Spielfigur zu phonographieren. Ferner kann häufig in offenen Scenen die Akustik eine so schlechte sein, dass man auf die unmittelbare Mitaufnahme der scenischen Geräusche ververzichten muss. Bei Scherzaufnahmen, z.B. sprechenden Tieren, Attrappen usw. ist eine Schnallaufnahme so wie so unmöglich. 2216 2217

Die vorliegende Erfindung bezieht sich auf einen phonetischen Begleitfilm, dessen Photogrammen nicht die originalen Lautereignisse der photographierten Scene zugrunde liegen, sondern die anderer, sinngemäss günstiger gewählten Lautquellen. Dadurch wird ermöglicht, Bildern, stummen Kinematogrammen, Theatervorführungen usw. eine beliebige lautmässige Erläuterung und misikalische Ausschmük kung zu geben.

2218 *Plaintiff's Exhibit No. 32.*

Die Herstellung dieses nur bedingt synchron sein müssenden Gegleitfilms kann, an einigen Ausführungsbeispielen gezeigt, etwa folgendermassen geschehen:

Bei kinetographischen Aufnahmen der originalen plastischen Scene ist mit dem Transportmechanismus des Serienbilderanfnahmeapparates die Filmaufwickeltrommel eines besonderen Akustographen swangsläufig gekuppelt. Die zur Erläuterung, Ansschmückung und Belebung der optischen Handlung dienenden Lautquellen, wie
2219 Vortragende, Musikinstrumente, Geräuschmaschinen und desgl., sind ausserhalb des Objektivbildwinkels akustisch günstig postiert und treten bei Beginn der Handlung unter steter sinngenmässer Bezugnahme auf dieselbe in Aktion.

Wenn bei der kinetographischen Originalaufname aus irgend welchen Gründen, (z.B. Sturm) die Aufnahme des Begleitfilms nicht möglich ist, so kann dieselbe auch bei der Reproduktion des fertigen Bildfilms, Bildfilms, unter Massnahmen die den oben skizzierten ähnlich sind, geschehen.
2220 Hier wäre der Transportmechanismus des Reproduktionsapparates mit dem des Akustographen zu verkuppeln.

Die Weiterbehandlung der Bildfilme nach erfolgter Belichtung ist in beiden Fällen bezüglich des Kopierprozesses, der Wiedergrabe usw. die übliche. Wenn der Begleitfilm bei der Aufnahme dieselbe Forthbewegungsschnelligkeit wie der Bildfilm hatte, so können für die Wiedergrabe die beiden Ereignisreihen aus Zweckmässigkeitsgründen auch auf ein Filmband kopiert werden.

Ausser auf den oben skizzierten Wegen lassen sich Bilderläuterungs und– Belebungsphono-

 2221

gramme z.B. Filmtitel, Briefe, Musiksolos und dergl. natürlich auch einzeln herstellen und nach Art der Bildfilme zu kopierbaren akustischen Reihen vereinigen.

Um bestimmte in Handlung und Ton zusammengehörige Filmstellen bei der Bearbeitung zu erkennen, ist es ferner notwendig, die beiden mit einander in Beziehung stehenden Filme in bestimmten Abständen mit Marken oder Zahlen zu versehen.

2222

Patentanspruch;

1) Photophonetischer, durch Querbelichtung hergestellter Begleitfilm für stumme Bilder oder Handlungen, dadurch gekennzeichnet, dass eine Aufnahme unabhängig von den, das originale optische Ereignis beleitenden Lauten bewarkstelligt wird.

2) Photophonetischer Begleitfilm nach Anspruch 1) dadurch gekennzeichnet, dass er bei der kinetographischen Originalaufnahme unter Benutzung nicht (oder num teils) scenenmässiger Lautquellen beeindruckt wird. 2223

3) Photophonetischer Begleitfilm nach Anspruch 1) dadurch gekennzeichnet, dass er unter Benutzung sinngemässer Lautquellen angesichts des reproduziert, werdenden Bildfilms hergestellt wird.

4) Photophonetischer Begleitfilm nach Anspruch 1) dadurch gekennzeichnet, dass er aus einzeinen, getrennt hergestellten und sinngemäss aneinandergereihten Photophonogram reihen besteht.

2224 *Plaintiff's Exhibit No. 32.*

5) Photophonetischer Begleitfilm nach Anspruch 1) dadurch gekennzeichnet, dass die Photogrämmreihen des Bild- und Begleitfilms auf ein Filmband kopiert sind.

6) Photophonetischer Begleitfilm nach Anspruch 1) dadurch gekennzeichnet, dass Bildund Begleitfilm abstandsweise Identitätsmarken trafen zu dem Zwecke Parallereignisse feststellen zu können.

2225 7) Photophonetischer Begleitfilm nach Ansprnch 1) dadurch gekennzeichnet, dass die Gesetzmäshigkeit im Forthbewegungsverhältnis der beiden Filme durch Perforation auch des Begleitfilms mit erreicht wird.

MBR

American Consular Service

German Reich,)
Province of Brandenburg,)
2226 Consulate General of the)ss.
United States of America)
at Berlin.)

I, John F. Stone, Vice Consul of the United States of America at Berlin, German Reich, duly commissioned and qualified, do hereby certify that Lübcke whose true signature and official seal are, respectively subscribed and affixed to the foregoing instrument, was at the time of subscribing same an official of the Government Patent office of the German Reich, duly commissioned and by law authorized to execute such acts, and that his signature and official

Plaintiff's Exhibit No. 32. 2227

seal affixed thereto are genuine, and as such are entitled to full faith and credit.

In Witness Whereof I have hereunto set my hand and the seal of the Consulate General at Berlin, German Reich, this 6th day of October, 1932.

John F. Stone,
Vice Consul of the United States of America.

Service No. 05972
$2.-Mk.8.48

(Seal) 2228

(Translation by George C. O. Haas, Ph. D., New York.)

Certificate.

Messrs. Hans Vogt, of Berlin-Schöneberg, Joseph Massolle, of Berlin-Friedenau, and Dr. Joseph Engl, of Berlin-Grunewald, filed in Germany, at the National Patent Office, on April 2, 1919, an application for a patent of invention on 2229

"Photophonetic accompanying film for silent pictorial actions".

The paper attached hereto is a correct and exact transcript of the original basic document of this patent application.

Berlin, October 5, 1932.

The President of the National Patent Office.

By authority,
(Signed) Lübcke.

V. 14,634 IX/57 a 2.

2230 *Plaintiff's Exhibit No. 32.*

Phonetic Accompanying Film for Silent Pictorial Actions.

In the domain of "silent" cinematography the necessary elucidations of pictures have hitherto been provided either acoustically by reciting persons or optically by concomitant projection of legends, intervening pictures, or the like. In most instances the silent presentation of pictures was also vivified by the playing of
2231 orchestras or of mechanical musical apparatus.

The drawbacks of these means of elucidation and vivification are well known.

In the domain of "sound" cinematography, in processes which render possible, simultaneous with the cinematographic recording, also a photographic fixation of the tones and employ novel electroacoustic means of reproduction, the defects mentioned above are abolished. Practical experience showed, however, that in a series of cinematographic expedients the synchronous concomitant recording of the tonal
2232 event at the taking of the pictures is in part not desirable and in part impossible. For example, it would not be advantageous to phonograph an actor or actress who was successful in the presentation of pantomines, but was equipped with a poor speaking voice. Furthermore, in open-air scenes the acoustics may frequently be so poor that it is necessary to dispense with immediate concomitant recording of the scenic sounds. In the case of humorous recordings, for example talking animals, tricks, etc., a recording of the sound is in any event impossible.

Plaintiff's Exhibit No. 32. 2233

The present invention relates to a phonetic accompanying film whose photograms are based, not on the original sound-events of the photographed scene, but on those of other sources of sound which are appropriately chosen so as to be more favorable. By this means it becomes possible to provide pictures, silent cinematograms, theatrical presentations, etc. with any desired phonetic elucidation and musical adornment.

The production of this accompanying film, 2234
which has to be only relatively synchronous, may, as shown by several specimens of execution, be effected in more or less the following manner.

In cinematographic recordings of the original plastic scene there is desmodromically coupled with the feed mechanism of the apparatus for the taking of the serial pictures the film-winding drum of a special acoustograph. The sources of sound which serve for elucidation, adornment, and vivification of the optical action, such as vocal performers, musical instruments, noise 2235
machines, and the like, are stationed in an acoustically favorable manner outside of the pictorial angle of the objective and come into action at the commencement of the action, with constant appropriate reference to it.

If, at the time of the cinematographic original recording, for any reasons whatever (for example, a storm), the taking of the accompanying film is impossible, this may also take place at the reproduction of the completed picture film, with expedients which are similar to those sketched above. In this case the feed mechanism

2236 *Plaintiff's Exhibit No. 32.*

of the reproduction apparatus would have to be coupled with that of the acoustograph.

The further treatment of the picture films, after the exposure has taken place, is in both cases the usual one as regards the copying process, the reproducing, etc. If the accompanying film had in the recording the same speed of travel as the picture film, then the two series of events may for reasons of expediency also be copied on one film strip for the reproduction.

2237 In addition to being produced by the means sketched above, phonograms for elucidation and vivification of pictures, for example film titles, letters, music solos, and the like, naturally also admit of being produced separately and combined after the manner of picture films to form copiable acoustic series.

In order to recognize in the treatment particular film places which belong together in action and in tone, it is further necessary to provide the two interrelated films, at particular intervals, with marks or numbers.

2238

PATENT CLAIM.

1. Photophonetic accompanying film, produced by means of transverse illumination, for silent pictures or actions, characterized by the fact that its recording is accomplished independently of the sounds accompanying the original optical event.

2. Photophonetic accompanying film in accordance with claim 1, characterized by the fact that at the cinematographic original recording

Plaintiff's Exhibit No. 32. 2239

it is impressed with the use of sources of sound which are not (or only in part) those due to the scenes.

3. Photophonetic accompanying film in accordance with claim 1, characterized by the fact that it is produced, with the use of appropriate sources of sound, at the sight of the picture film while it is being reproduced.

4. Photophonetic accompanying film in accordance with claim 1, characterized by the fact 2240
that it consists of individual series of photophonograms which are separately produced and appropriately joined to one another in succession.

5. Photophonetic accompanying film in accordance with claim 1, characterized by the fact that the photogram series of the picture film and the accompanying film are copied on one film strip.

6. Photophonetic accompanying film in ac- 2241
cordance with claim 1, characterized by the fact that the picture film and the accompanying film bear spaced identity marks for the purpose of enabling one to ascertain parallel events.

7. Photophonetic accompanying film in accordance with claim 1, characterized by the fact that regularity in the ratio of travel of the two films is attained by means of perforation of the accompanying film as well.

PLAINTIFF'S EXHIBIT No. 33 ABANDONED

NUMBER (Series of 1915),

458636 1921 (EX'R'S BOOK) 272 - 33

DIV. 7 PATENT No.

Name Joseph Massolle, Joseph Engl and Hans Vogt

of Grunewald and Berlin-Schöneberg

County of

State of Germany.

Invention Phonetic Companion Film for Silent Pictorial Representations.

PARTS OF APPLICATION FILED.	ORIGINAL	RENEWED
Petition	Apl 4, 1921	, 192
Affidavit	" " , 1921	, 192
Specification	" " , 1921	Just name of 2nd mentor differs , 192
Drawing	3/15/22 , 192	, 192
Photo Copy	, 192	, 192
First Fee Cash	$15 Apl 4, 1921	, 192
" " Cert.	, 192	, 192
Appl. filed complete	Apr 4 , 192	, 192

Examined and Passed for Issue , 192 , 192

Exr. Div. Exr. Div.

Notice of Allowance , 192 By Commissioner. , 192 By Commissioner

Final Fee Cash , 192 , 192

" " Cert. , 192 , 192

Patented , 192

Attorney ~~Munn & Co. 625 F. N.W. City~~

~~Associate~~ Attorney Ward, Avery & Smith 233 Broadway New York N.Y.

(No. of Claims Allowed) Print Claims in O. G. (Cl.)

Title as Allowed

Division of App., No. , filed , 19

Verein. Staaten
von Nord-Amerika

Patente

Case 13

1,493,648

Petition

TO THE COMMISSIONER OF PATENTS:

Your petitioner s, Joseph MASSOLLE, Dr. Joseph ENGL and Hans VOGT, citizens of the German Republic and resident of the first and second of Grunewald, the third of Berlin-Schöneberg, Germany,

Sub
Sub Spec

whose post-office address is the 1st: 60 Cunostrasse, Grunewald, the 2nd: 17 Orberstrasse, Grunewald, the 3rd: 9 Königsweg, Berlin-Schöneberg, Germany,

pray that Letters Patent may be granted to them for the improvement in

PHONETIC COMPANION FILM FOR SILENT PICTORIAL REPRESENTATIONS

set forth in the annexed Specification.

And they hereby appoint Charles A. Munn & Orson D. Munn constituting the firm of Munn & Co. of the cities of New York N.Y. & Washington D.C. its accredited agents their Attorney, with full power of substitution and revocation, to prosecute this application, to make alterations and amendments therein, to receive the Letters Patent, to transact all business in the United-States Patent Office connected therewith, and to sign his name to the drawings.

Signed at Berlin in the County of Prussia and State of Germany this 5th day of March 1921.

Joseph Massolle
Dr. Josef Engl
Hans Vogt

Specification

TO ALL WHOM IT MAY CONCERN:

BE IT KNOWN That we, Joseph MASSOLLE, ~~Dr.~~ Joseph ENGL and Hans VOGT, citizens of the German Republic residing at the ~~x~~first and second of Grunewald, the third of Berlin-Schöneberg, Germany, have invented certain new and useful improvements in

PHONETIC COMPANION FILM FOR SILENT PICTORIAL REPRESENTATIONS

of which the following is a specification

In the domain of "silent" kinematography the necessary explanations of the pictures have hitherto been given either acoustically by narrators or optically by the conjoint projection of titles, intermediate pictures or the like. In most cases the silent exhibition of the pictures has been enlivened by the playing of orchestras or mechanical musical instruments .

The disadvantage of this means of explanation and enlivement are well known .

In the domain of sounding kinematography the above mentioned disadvantages are obviated with the methods which simultaneously with the kinematographic recording enable also a photographic ~~fixation~~ production of the sounds and which utilise novel electroacoustical means of reproduction. Practice has shown however that in a group of succeeding kinematographic steps the synchronous conjoint recording of the sound incidents accompanying the taking of the picture is either not desirable and not possible. Thus for example it is not advantageous to phonograph a playing Figure which works well in the representation of a pantomime but has a bad speaking organ. Furthermore in open scenes the acoustics may be so bad that the direct conjoint recording of the scenic noises has to be abandoned. In the case of comic scenes, e-g- talking animals, take-ins, etc. the recording of the sounds is as good as impossible .

The present invention relates to a phonetic companion film, the photogramms of which are not based on the original sound incidents of the scene which is being photographed but ~~these~~ on other sources of sound which are more favourably selected in accordance with facts of the case. By this means it is possible to provide pictures, silent kinema-

tograms, theatrical performances etc. with any desired kind of audible explanation and musical adornment .

The production of this companion film which must be absolutely synchronous only conditionally, can be effected in the following manner explained by a few examples .

When the original plastic scene is recorded kinematographically the film winding up drum of a separate acoustograph is positively coupled to the feed mechanism of the recording apparatus for the series pictures. The sources of sound for the explanation, ornamentation and enlivement of the optical representation , such as lecturers, musical instruments, noise machines and the like are ~~ported~~ in an acoustically favourable position outside the angle of the picture thrown by the objective and commence to work at the beginning of the representation and in a relationship therewith which is always in accordance with the facts of the case .

If the recording of the companion film should not be possible at the time the kinematographic original film is being taken (say owing to a storm) this may be done during the reproduction of the finished film under precautions as above mentioned. In this case the feed mechanism of the producing apparatus would have to be coupled to the acoustograph.

The further treatment of the picture film after exposure is the usual one in both cases as regards the copying process, the reproduction etc. When the companion film had the same speed of feed when taken as the picture film the two records of incidents could be conveniently copied on one film for the reproduction of said incidents .

In addition to the methods above indicated explana-

tions of the pictures and entivenment phonogramms such for example as film titles, letters, musical solos, and the like may naturally also be produced separately and combined into acoustic series which can be copied after the manner of the picture films .

In order to be able to recognise corresponding points on the films which belong together as regards subject and sound it is also necessary to provide the two correlated films with marks or numbers at determined distances.

We claim :-

1.- A method for producing photophonetic companion films for silent pictures or representations by transverse exposure according to which the recording of the same is effected independently of the sounds which accompany the original optical incident .

2.- A method for producing photophonetic companion films for silent pictures or representations by transverse exposure according to which the same is exposed at the kinetographic taking of the original to the action of sources of sounds which are not in accordance with the scene .

3.- A method for producing photophonetic companion films for silent pictures or representations by transverse exposure according to which the same is exposed at the kinetographic taking of the original to the action of sources of sounds which are only partly in accordance with the scene.

4.- A method for producing photophonetic companion films for silent pictures or representations by transverse exposure according to which the same is produced with the use of sources of sounds in accordance with the facts of the picture films to be reproduced.

5.- A method for producing photophonetic companion films for silent pictures or representations by transverse exposure according to which the photophonetic companion film is composed of separate, separately produced series of photophonogramms assembled together in accordance with the facts of the case .

6.- A method for producing photophonetic companion films for silent pictures or representations by transverse exposure according to which the series of photogramms of the picture and companion film are copied on one film .

7.- A method for producing photophonetic companion films for silent pictures or representations by transverse exposure according to which the picture and companion film carry at determined distances indentification marks for the purpose of enabling parallel incidents to be determined.

8.- A method for producing photophonetic companion films for silent pictures or representations by transverse exposure according to which the ~~pxx~~ uniformity in the ratio of the forward movement of the two films is obtained by perforation also of the companion film .

IN TESTIMONY WHEREOF we affix our signatures in presence of two witnesses.

Joseph Massolle

Dr. Josef Engl Hans Vogt

Fritz Wanckauer, Berlin, Gitschiner Str. 1

Dr. Otto Schneider, Berlin, Kronprinzenufer 2

Oath or Affirmation

Berlin

Germany

Joseph MASSOLLE, Dr. Joseph ENGL and Hans VOGT

the above-named petitioners being duly sworn, depose and say that they are of

citizens of the German Republic

and residents of the first and second of Grunewald, the third of Berlin-Schöneberg, Germany

that they verily believe themselves to be the original, first and joint inventors of the improvements in

PHONETICA COMPANION FILM FOR SILENT PICTORIAL REPRESENTATIONS

described and claimed in the annexed specification; that they do not know and do not believe that the same was ever known or used before their invention or discovery thereof, or patented or described in any printed publication in any country before their invention or discovery thereof, or more than two years prior to this application, or in public use or on sale in the United States for more than two years prior to this application; that said invention has not been patented in any country foreign to the United States on an application filed by themselves or their legal representatives or assigns more than twelve months prior to this application; and that no application for patent on said improvement has been filed by themselves or their representatives or assigns in any country foreign to the United States exept as follows in GERMANY on the 2nd April 1919, in GREAT BRITAIN on the 10th January 1921 and in ITALY on the 29th January 1921.

Joseph Massolle

Sign full name here

Dr. Josef Engl Hans Vogt

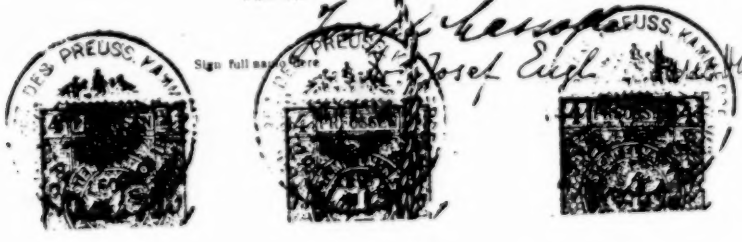

Div. 7 Room 312 2-200 V Paper No. 2

Address only "The Commissioner of Patents, Washington, D. C." and not any official by name.

All communications relating to this application should give the serial number, date of filing, title of invention, and name of the applicant.

DEPARTMENT OF THE INTERIOR

UNITED STATES PATENT OFFICE

WASHINGTON April 13, 1921

Munn & Co.

625 F St. N. W.

Washington, D. C.

APR 13 1921

Please find below a communication from the EXAMINER in charge of the application of

J. Massole, J. Engl, and H. Vogt, filed Apr. 4i, 1921,

Phonetic Companion Film etc., Serial No. 458,636

Thomas E. Robertson
Commissioner of Patents.

All claims are rejected as not proper method claims. They do not point out any method. No art can be cited until a better disclosure is made; the patent to

Hopkins 1,286,638 Dec. 3, 1918
88-16.2

appears the nearest to what is understood to be intended.

A new oath is required for the following reasons. The jurat is not in the English language, there is no Consular certificate and the name of second inventor, Engl, varies. New papers are required as the ribbon has been cut and tied together again.

The method appears to be capable of illustration. Such illustration is accordingly required.

The specification is full of obvious inaccuracies and should be carefully revised.

W.J.W.

Examiner.

Crw

a--5

MAR 15 1922

CRW:D

MAR 17 1922

IN THE UNITED STATES PATENT OFFICE

In re application,

J. Massole, J.Engl

and H. Vogt,

Filed April 4,1921, Div. 7 Room 312

Phonetic Companion Film,etc.

Serial No. 458, 636 March 13,1922.

HON. COMMISSIONER OF PATENTS,
WASHINGTON,D.C.

SIR:

Responsive to the Office letter of April 13,1920.

Erase "fixation" line 13, page 1 and insert --production--.

Correct the spelling of "utilize" line 14, same page.

Same page, line 15, correct the spelling of "practice".

Same page, line 25, change "impossible" to --possible--.

Same page, line 29, erase "those of" and insert --on--.

Erase "only conditionally" line 4, page 2 and insert --will the picture film--.

Same page, line 5, erase "explained by a few examples".

Same page, line 8, before "is" insert --film--.

Same page, line 12, erase "posted" and insert --arranged--.

Insert the following after line 5, page 3:

"In the drawing is shown a film formed according to the invention, and wherein a represents the picture portion of the film and b the sound producing portion at the longitudinal edge of the picture portion outside of the perforations thereof. As before pointed out the sound producing portion b is formed separately from picture portion a and by sounds other than the sounds of the pictures thereof and the two are copied upon one and the same film band".

Erase the claims and insert:--

1. The method herein described of producing a combined picture and sound producing film consisting in producing the photograms on the film by sounds other than the sounds of the pictures.

2. The method herein described of producing a combined picture and sound producing film, consisting in producing two separate films, and then reproducing the two films on a single band.

3. The method herein described of producing a combined picture and sound producing film, consisting in forming a picture film, forming a sound producing film by sounds other than the sounds of the pictures of the picture film, and then reproducing the said films on a single band.

4. A moving picture film having a sound producing film extending along one outer longitudinal edge thereof outside of the perforations thereof.

5. A moving picture film having a sound producing film extending along one longitudinal edge outside of the perforations thereof, the photograms of the sound producing film being produced by sounds other than the sounds of the pictures.

R E M A R K S

A drawing is herewith filed.

A new oath will in due course be filed.

New claims 1,2 and 3 are thought to be for a legitimate method, and claims 4 and 5 for the film, are thought allowable in the same application with the method claims. The claims are thought to cover patentable subject matter and early and favorable action is respectfully requested.

Respectfully submitted,

J. MASSOLE, etal

By Munn Reo

Attorneys.

Div. 7 Room 312 2-260 V Paper No. 2

Address only "The Commissioner of Patents, Washington, D. C." and not any official by name.

All communications requesting this application should give the serial number, date of filing, title of invention, and name of the applicant.

DEPARTMENT OF THE INTERIOR
UNITED STATES PATENT OFFICE

WASHINGTON March 18, 1922

Munn & Co.

625 F St. N. W.

Washington, D. C.

MAR 18 1922

Please find below a communication from the EXAMINER in charge of the application of

Massolle, Engl and Vogt, filed Apr. 4, 1921, Phonetic Companion Film etc., Serial No. 458,636

Thomas E. Robertson

Commissioner of Patents.

Case reconsidered as amended March 15, 1922.

The requirement for a new oath and uniformity of name of the second inventor is repeated.

Claims 1 to 3 are rejected on Hopkins of record. See especially lines 91 to 99 of page 2, lines 26 to 29 on page 4.

Claims 1 to 3 are further rejected on

Hopkins 1,302,367 Apr. 29, 1919 88-16.2

Claim 4 is rejected on the French patent to

Canton 459,637 Sept. 2, 1913 (1 sheet) 88-16.2

Claim 5 is rejected on Canton in view of either patent to Hopkins and is further rejected as defining an object by the process of making it.

Claims 1, 3 and 5 are objected to as vague and indefinite. What is meant by "sounds of the picture"?

Claims 1, 3 and 5 are further rejected as attempting to distinguish by a negative limitation.

The preamble should be amended to recite applicant's foreign applications.

W.J...

Examiner.

APPLICATION ROOM
OCT
26
1922

In the matter of the application of JOSEPH MASSOLLE, JOSEF ENGL and HANS VOGT, for patent for PHONETIC COMPANION FILM FOR SILENT PICTORIAL REPRESENTATIONS, filed April 4, 1921, Serial No.458636

P E T I T I O N.

TO THE COMMISSIONER OF PATENTS:

Your petitioners, JOSEPH MASSOLLE and JOSEF ENGL, residents of Grunewald, Germany, and HANS VOGT, resident of Berlin-Wilmersdorf, Germany, citizens of the German Republic, whose post-office addresses are, JOSEPH MASSOLLE, 60 Cunostrasse, Berlin-Grunewald, Germany, JOSEF ENGL, 52 Hohenzollerndamm, Berlin-Grunewald, Germany, and HANS VOGT, 49 Babelsbergerstrasse, Berlin-Wilmersdorf, Germany, pray that Letters Patent may be granted to them for improvement in PHONETIC COMPANION FILM FOR SILENT PICTORIAL REPRESENTATIONS set forth in the above entitled application; and they hereby appoint CHARLES A. MUNN and ORSON D. MUNN, constituting the firm of MUNN & CO., of the Cities of New York, N.Y., Washington, D.C., Chicago, Ill. and San Francisco; Cal.; or accredited agents, their Attorneys, with full power of substitution and revocation, to prosecute the above entitled application, to make alterations and amendments therein, to receive the patent, to transact all business in the Patent Office connected therewith, and to sign their name to the drawings.

Signed at Berlin Germany by the said Joseph Massolle, this ninth day of March 1922.

Joseph Massolle

Signed at Berlin Germany by the said Josef Engl, this ninth day of March 1922.

Dr. Josef Engl

Signed at Berlin Germany by the said Hans Vogt. this ninth day of March 1922.

Hans Vogt

TO ALL WHOM IT MAY CONCERN:

Be it known that we, JOSEPH MASSOLLE, JOSEF ENGL, and HANS VOGT, citizens of the German Republic and residents respectively, the first and second of Berlin-Grunewald, the third of Berlin-Wilmersdorf, Germany, have invented a new and improved

PHONETIC COMPANION FILM FOR SILENT PICTORIAL REPRESENTATIONS

Insert A1

1 A of which the following is a full, clear and exact description.

In the domain of "Silent" kinematography the necessary explanations of the pictures have hitherto been given either acoustically by narrators or optically by the conjoint projection of titles, intermediate pictures or the like. In most cases the silent exhibition of the pictures has been enlivened by the playing of orchestras or mechanical musical instruments.

The disadvantage of this means of explanation and enlivement are well known.

In the domain of sounding kinematography the above mentioned disadvantages are obviated with the methods which simultaneously with the kinematographic recording

erally also a photographic fixation of the sounds and which utilize novel electroacoustical means of reproduction. Practice has shown however that in a group of succeeding kinematographic steps the synchronous conjoint recording of the sound incidents accompanying the taking of the picture is either not desirable and not possible. Thus for example it is not advantageous to phonograph a playing figure which works well in the representation of a pantomime but has a bad speaking organ. Furthermore in open scenes the acoustics may be so bad that the direct conjoint recording of the scenic noises has to be abandoned. In the case of comic scenes, e.g. talking animals, take-ins, etc., the recording of the sounds is as good as impossible.

The present invention relates to a phonetic companion film, the photogramms of which are not based on the original sound incidents of the scene which is being photographed but those of other sources of sound which are more favourably selected in accordance with facts of the case. By this means it is possible to provide pictures, silent kinematogramms, theatrical performances etc., with any desired kind of audible explanation and musical adornment.

The production of this companion film which must be absolutely synchronous only conditionally, can be effected in the following manner explained by a few examples.

When the original plastic scene is recorded kinematographically the film winding up drum of a separate

acoustograph is positively coupled to the feed mechanism of the recording apparatus for the series pictures. The sources of sound for the explanation, ornamentation and enlivement of the optical representation, such as lecturers, musical instruments, noise machines and the like are posted in an acoustically favourable position outside the angle of the picture thrown by the objective and commence to work at the beginning of the representation and in a relationship therewith which is always in accordance with the facts of the case.

If the recording of the companion film should not be possible at the time the kinematographic original film is being taken (say owing to a storm) this may be done during the reproduction of the finished film under precautions as above mentioned. In this case the feed mechanism of the producing apparatus would have to be coupled to the acoustograph.

The further treatment of the picture film after exposure is the usual one in both cases as regards the copying process, the reproduction, etc. When the companion film had the same speed of feed when taken as the picture film the two records of incidents could be conveniently copied on one film for the reproduction of said incidents.

In addition to the methods above indicated explanations of the pictures and enlivenment phonogrammes such for example as film titles, letters, musical solos, and the like may naturally also be produced separately and combined into acoustic series which can be copied after the manner of the picture films.

In order to be able to recognize corresponding points on the films which belong together as regards subject and sound, it is also necessary to provide the two correlated films with marks or numbers at determined distances.

We claim:

1. A method for producing photophonetic companion films for silent pictures or representations by transverse exposure according to which the recording of the same is effected independently of the sounds which accompany the original optical incident.

2. A method for producing photophonetic companion films for silent pictures or representations by transverse exposure according to which the same is exposed at the kinetographic taking of the original to the action of sources of sound which are not in accordance with the scene.

3. A method for producing photophonetic companion films for silent pictures or representations by transverse exposure according to which the same is exposed at the kinetographic taking of the original to the action of sources of sounds which are only partly in accordance with the scene.

4. A method for producing photophonetic companion films for silent pictures or representations by transverse exposure according to which the same is produced with the use of sources of sounds in accordance with the facts of the picture films to be reproduced.

5. A method for producing photophonetic companion films for silent pictures or representations by transverse exposure according to which the photophonetic companion film is composed of separate, separately produced series of photophonogramms assembled together in accordance with the facts of the case.

6. A method for producing photophonetic companion films for silent pictures or representations by transverse exposure according to which the series of photogramms of the picture and companion film are copied on one film.

7. A method for producing photophonetic companion films for silent pictures or representations by transverse exposure according to which the picture and companion film carry at determined distances indentification marks for the purpose of enabling parallel incidents to be determined.

8. A method for producing photophonetic companion films for silent pictures or representations by transverse exposure according to which the uniformity in the ratio of the forward movement of the two films is obtained by perforation also of the companion film.

Joseph Tannenberg

Dr. Josef Engl

Hans Vogt

Witnesses:

.....

John W. Bulkley

PATENT OFFICE
OCT
3
1922

In the matter of the application of JOSEPH MASSOLLE, JOSEF ENGL and HANS VOGT, for patent for PHONETIC COMPANION FILM FOR SILENT PICTORIAL REPRESENTATIONS, filed April 4, 1921, Serial No.458.636.

O A T H.

JOSEPH MASSOLLE and JOSEF ENGL, residents of Berlin-Grunewald, Germany, and HANS VOGT, resident of Berlin-Wilmersdorf, Germany, the above named petitioners being sworn depose and say: that they are citizens of the German Republic; that they verily believe themselves to be the original, first and joint inventors of the improvement in PHONETIC COMPANION FILM FOR SILENT PICTORIAL REPRESENTATIONS described and claimed in the above-entitled application; that they do not know and do not believe that the same was ever known or used before their invention or discovery thereof, or patented or described in any printed publication in any country before their invention or discovery thereof, or patented or described in any printed publication or in public use or on sale in the United States prior to the filing of any foreign application by them or their legal representatives or assigns; and that no application for patent on said improvement has been filed by, nor patent granted to, them or their legal representatives or assigns in any country foreign to the United States, except as follows:

Germany, April 2, 1919; Great Britain, January 10, 1921; Italy, January 29, 1921; and that the petitioners' full names are as above written.

Joseph Marsolla

Dr. Josef Engl

Hans Vogt

9th

Sworn

March 22

C W Turrell

Vice

Service #1094
$2

[redacted]

[redacted]

Amendment

8

APPLICATION ROOM U.S. PATENT OFFICE OCT 28 1922

CRW:MK

IN THE UNITED STATES PATENT OFFICE.

In re application of :

Massolle, Engl and Vogt :

Phonetic Companion Film etc. : Room 312

Filed April 4, 1921 : Div. 7

Serial No. 458,636 :

----oooOooo----

OCT 27 1922

Hon. Commissioner of Patents,

Washington, D. C.

S I R:

In response to the Office Letter of March 16, 1922, amend the above entitled application as follows:

Substitute the papers filed herewith for the original papers and enter amendments of March 15, 1922 therein and in the preamble before "of which" insert --for which I have made applications Germany April 2, 1919, Great Britain January 10, 1921, and Italy January 29, 1921--

B1

Erase "other than the sounds of the picture" lines 3 and 4, claim 1 and insert --which are recorded for for the sound film independently of the picture film--

B2

Erase "other than the sounds of the picture" line 4, claim 3 and insert --which are recorded for the sound film independently--

B3

Erase "other than the sounds of the picture" lines 4 and 5, claim 5 and insert --which are recorded for the sound film independently of the picture film--

B4

Erase claim 4 and change the ordinal of claim 5 to 4.

R E M A R K S.

New papers have been filed as required. Claims

1, 3 and 4 (former 5) as amended are thought to be free from the objections noted. Claims 1, 2 and 3 are thought to distinguish the invention from the patents of Hopkins.

The statements in patent 1,286,638, page 2, lines 91-99 and page 4, lines 26-29 say that a picture film can be accompanied by music which however has not any direct relation to the film.

These musical records are made mechanically according to the said patent so that there is no question of recording pictures and sounds photographically independently the one of the other and to reproduce the same. Also patent 1,302,367 relates to the recording and reproduction of acoustic vibrations mechanically by means of the gramophone, phonograph or the like. It is quite correct that such a mechanical recording device can be used independently of the recording of the pictures, but this has nothing to do with the present invention.

Claim 4 (former 5) is not anticipated by French patent 459,537, as this patent describes an arrangement in which the sound and the picture are reproduced simultaneously and in dependence the one of the other. Claim 4 claims, however, the use of marks outside the perforations of a film band, which contains sound and picture recorded separately.

The Official draftsman has been requested to correct the signature of Engl to the drawing.

A reconsideration and allowance of the application is respectfully requested.

Respectfully submitted,
MASSOLE, ENGL AND VOGT

BY.....Attys.

Washington, D. C.

Div. 7 Room 312 2-260 V Paper No. 8

Address only "The Commissioner of Patents, Washington, D. C." and not any official by name.

All communications respecting this application should give the serial number, date of filing, title of invention, and name of the applicant.

DEPARTMENT OF THE INTERIOR

UNITED STATES PATENT OFFICE

WASHINGTON Nov. 11, 1922

NOV 11 1922

Munn & Co.

625 F St. N. W.

Washington, D. C.

Please find below a communication from the EXAMINER in charge of the application of

Moeslle, Engle and Vogt, filed Apr. 4, 1921, Phonetic Companion Film etc., Serial No. 488,636

Thomas E. Robertson

Commissioner of Patents.

Case reconsidered as amended Oct. 28, 1922.

Owing to confusion which has arisen due to the filing of substitute papers, applicants are requested to rewrite all claims now in the case.

A brief description of the figure should be inserted in the substitute papers.

It is old as shown in the references of record to have a film having a sound record and a motion picture record. These have been shown to be synchronized and the problem has been to obtain synchronization. However the sound record and the picture record are made on separate films and then combined. It is old to make sound records without picture records and picture records without sound records. These may be combined without involving invention. In the Hopkins patent the sounds and pictures are separate. Whether the sound is produced from a phonograph record or any other form of record is immaterial.

In the patent 1,302,367 there is a sound record and a picture record made at separate times. The sound record is not made on the film but Canton of record shows that it is old to

make a sound record on the film. For this reason there is no invention in putting the record of Hopkins on the film in view of Canton.

No particular means or apparatus for making the film sound record are shown and it appears this is done according to the old method. The essence of the case seems to be in the use of a motion picture record and a harmonizing sound record which was not made at the same time. This is exactly what Hopkins shows. For this reason the claims seem to be fully anticipated and applicant should put his case in condition for final action.

Examiner.

A J W

11-11-22 R
Assoc. Power of Atty
10

U. S. Patent Office
MAY 31 1924
DIVISION VII

MAY 29 1924
U.S. PATENT OFFICE

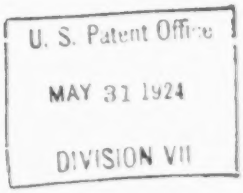

UNITED STATES PATENT OFFICE.

JOSEPH MASSOLLE,	:	
JOSEF ENGL,	:	Div.7
HANS VOGT,	:	Room 312
Serial No. 458,636,	:	
Filed April 4, 1921.	:	
Phonetic Companion Film for Silent Pictorial Representations.	::	

To the Commissioner of Patents,

Washington, D.C.

Sir:

The undersigned, attorneys of record in the above entitled application, hereby appoint Messrs. Ward, Crosby & Smith, (Reg. No. 11657), a firm composed of S. Mortimer Ward, Jr., Gorham Corsby and Dyer Smith, of 233 Broadway, New York, N.Y., as associate attorneys in said application, to prosecute said application, to make alterations and amendments therein, to receive the patent, and to transact all business in the Patent Office connected therewith.

Munn & Co

Signed at New York, N.Y.

May 27 1924.

MAIL ROOM AUG 1924 U.S. PATENT OFFICE

UNITED STATES PATENT OFFICE.

DIVISION AUG 2 1924 U.S. PATENT OFFICE

JOSEPH MASSOLLE
JOSEF ENGL
HANS VOGT.

Serial No. 456,339.

Filed April 4, 1921.

Phonetic Companion Film for Silent Pictorial Representations.

Div. 7

Room 512

Hon. Commissioner of Patents,

Washington, D.C.

Sir:

The undersigned hereby revoke all previous Powers of Attorney in connection with the above entitled application.

The undersigned hereby appoint Messrs. Ward, Crosby & Smith, a firm composed of S. Mortimer Ward, Jr., Gorham Crosby and Dyer Smith, (Registration No. 11657), of No. 233 Broadway, New York, New York, its attorneys, with full power of substitution and revocation, to prosecute said application, to make alterations and amendments therein, to receive the patent and to transact all business in the Patent Office connected therewith.

Josef Engl.

Hans Vogt

Joseph Massolle

We agree to the above revocation of our Power of Attorney.

Ward & Co

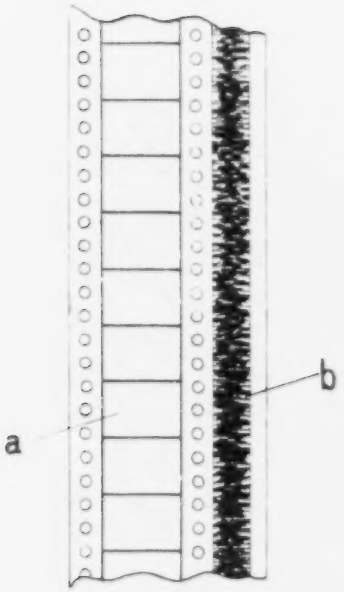

INVENTORS
Joseph Massolle
Joseph Engl
Hans Vogt
BY
Munn & Co
ATTORNEYS

2323

Plaintiff's Exhibit No. 34.

(Stamp)

Dr. Gerhard Jacoby
Notar I. Bez. des Preuss.
Kammergerichts
M. Beglaubigte Abschrift!
33.Q.29
6

Im Namen des Volkes!

2324

Verkündet
am 1. März 1929
gez. Zeiss, Angestellter,
als Urkundsbeamter
der Geschäftsstelle.

In Sachen

der Firma Tonbild-Syndikat Aktiengesellschaft in Berlin, Jägerstrasse 6,
vertreten durch ihren Vorstant: Dr. Hans Henkel and Arthur Frischknecht,

2325

Antragstellerin,

—Prozessbevollmächtigter: Rechtsanvalt Theodor Kallmann in Berlin SW.47, Yorkstrasse 76—

gegen

die Firma Klangfilm—G.m.b.H. in Berlin, Askanischer Platz 4,
vertreten durch ihre Geschäftsführer Dr. Kirn and Dr. Akemann,

Antragsgegnerin,

2326 *Plaintiff's Exhibit No. 34.*

—Prozessbevollmächtigte: Rechtsanwälte Dr. Danziger und Dr. Nünninghoff in Berlin W.10, Margaretenstrasse 8—wegen Patentstreits—Streitwert 100.000RM—

hat die 16. Zivilkammer des Landgerichts I in Berlin auf die mündliche Verhandlung vom 22. Februar 1929 under Mitwirkunk des Landgerichtsrats Dr. Hamburger, des Amts—und Landrichters Kopf und des Gerichtsassessors Dr.
2327 Knapp für Recht erkannt.

Die einstweilige Verfügung vom 8. Februar 1929 wird bestätigt und die Antragsgegnerin verurteilt, auch die weiteren Kosten des Verfahrens zu tragen.

TATBESTAND:

Die Antragsstellerin ist Generallizenznehmerin des mit Wirkung vom 15. April 1921 erteilten DRP. 368 383, dessen Anspruch 1. lautet:

2328 "Verfahren zum Herstellen von Positivfilmen, welche Bildreihen und photographisch aufgenommene Tonschrift enthalten, dadurch gekennzeichnet, dass die Negative getrennt entwickelt werden".

Auf die Patentschrift wird verwiesen.

Die Antragstellerin trug vor, die Antragsgegnerin sei im Begriff, am 8. Februar 1929 Tonbildfilme vorzuführen, die von der General Electric Comp. (sogenannte photophone-Filme) hergestellt seien. Die Herstellung dieser Filme er-

folge, wie aus dem Buch "TRANSACTIONS OF THE SOCIETY OF MOTION PICTURE ENGINEERS" Site 87 hervorgehe, in der Weise, dass der Tonfilm und der Druckfilm einzeln aufgenommen, entwickelt, dann zusammen in einer Kopiermaschine vereinigt würden, so dass eine kombinierte Kopie auf einem einzigen Film erzeugt werde. Diesen Verfahren falle unter das DRP. 368 383. Bei der jungen Entwicklung dieses Industriezweiges sei für die Antragsstellerin eine besondere Gefahr durch solche Patentverletzungen gegeben. 2329 2330

Die Antragsstellerin erwirkte auf Grund dieses Vortrages die einstweile Verfügung vom 8. Februar 1929, durch welche der Antragsgegnerin verboten wurde, "ein Verfahren zum Herstellen von Positivfilmen, welche Bildreihen und photographisch aufgenommene Tonschrift enthalten, anzuwerden", bei welchem die Negative getrennt entwickelt werden. Die Antragsgegnerin legte gegen dieses einstweilige Verführung Widerspruch ein.

Die Antragsstellerin beantragt: 2331

die einstweilige Verfügung zu bestätigen.

Die Antragsgegnerin beantragt:

die einstweilige Verfügung insoweit aufzuheben, dass hinter dem Wort "welche" eingefügt würden die Worte: "auf *einem* Filmband".

Sie trägt vor, sie wolle vorerst die einstweilige Verfügung im übrigen nicht angreifen, jedoch sei die Formel unklar. Man könne zunächst meinen, dass sie nur Filme behandle, auf denen zugleich Ton- und Bildfilme enthalten seien. Indessen richte die Antragsstellerin nach der Be-

2332 *Plaintiff's Exhibit No. 34.*

gründung ihres Antrags sich auch gegen Filme, welche die Antragsgegnerin in Deutschland herstelle. Diese aber würden so hergestellt, dass stets Ton und Bild sich aufgetrennten Filmstreifen befänden, und zwar sowohl bei der Aufnahme alsauch beim Entwickeln, Kopieren und Abrollen. Dieses Herstellungsverfahren dürfe durch die einstweilige Verfugung nicht verboten werden, zumal es durch die überreichte britische Patentschrift 105 589 bereits bekannt gegeben sei. Die Antragsstellerin have gleichwohl auf
2333 die Anfrage der Antragsgegnerin, ob sie Rechte aus der einstweiligen Verfügung gegen Tonfilme herleite, soweit Ton und Bild von getrennten Filmstreifen abrollten, keine befriedigende Antwort gegeben. Bei dieser Sachlage sei es unbedingt notwendig, die Formel der einstweiligen Verfügung zu ändern.

Die Antragsstellerin ist dem entgegengetreten. Es wird im übrigen auf den vorgetragenen Inhalt der Schriftsätze und der zur Glaubhaftmachung überreichten Anlagen verwiesen.

2334 *Entscheidungsgründe:*

Die Antragsgegnerin bestreitet das Vorliegen eines Arrestgrundes nicht. Tatsächlich ist dieser auch gegeben, da gerade die Tonfilm-Industrie in starker Entwicklung ist, und gerade jetzt Patentverletzungen der Antragsstellerin unabsehbaren Schaden bringen könnten.

Ebenso kann an sich der Arrestanspruch nicht bestritten werden. Nach dem DRP. 368 383 ist es von grossem Vorteil, die Tonschrift und die Bildreihe by sprechenden Filmen auf einem gemeinsamen Träger, ein Filmband aufzubringen. Schwierigkeiten ergeben sich aber hierbei in-

sofern, als bei der Aufnahme die Bildreihe über- oder unterbelichtet werden kann, während die Tonzeichenreihe stets normal belichtet ist. Diese Unterschiede lassen sich beim Entwickeln nicht ausgleichen. Der Erfinder setzte sich also die Aufgabe, diese Schwierigkeiten zubeheben und löst diese Aufgabe dadurch, dass die Negative getrennt entwickelt werden. Hierbei ist es gleichgültig, ob die Aufnahme schon getrennt erfolgt oder ob sie auf einem Film vorgenommen wird, der zum Entwickeln geteilt wird. Ebenso ist es gleichgültig, ob die Herstellung des einheitlichen Positivfilmes dadurch erfolgt, dass man die beiden Negativfilme nacheinander auf dem gleichen Positivfilm kopiert oder ob man die beiden Negativfilme vorher miteinander verklbt, und nun die Kopie auf einmal vornimmt. 2335 2336

Hiernach erstreckt sich der Schutzbereich des Patents auf ein Verfahren zum Herstellen von Positivfilmen, welche sowohl Bildreihen als auch Tonschrift enhalten, bei welchen die Negative getrennt entwickelt werden. Auch der Stand der Technik steht dieser Auslegung nicht entgegen, soweit bisher von der Antragsgegnerin Material überbracht ist. Die britische Patentschrift 105 589 beschreibt ein Verfahren, bei welchem sowohl bei der Aufnahme wie beim Entwickeln und Kopieren getrennte Bild- und Tonfilme vorhanden sind. Auch das Abrollen der Filme erfolgt nach dieser Patentschrift in der Regel getrennt unter synchroner Zasammenfassung. Lediglich Seite 6, Zeile 30 bis 32, ist die Möglichkeit erwähnt, die beiden Positivfilme nach der Kopie und vor dem Abrollen an den überhängenden Kanten zusammenzukleben, so dass tatsächlich ein Film da ist. Bis zum Stadium des Abrollens 2337

2338 *Plaintiff's Exhibit No. 34.*

kennt jedenfalls diese Patentschrift keinen gemeinsamen Film.

Bei dieser Auslegung des Klagepatents besteht kein Zweifel, dass das Verfahren, welches die General Electric Comp. nach dem überreichten Artikel anwendet, unter das Klagepatent fällt, da bei diesem Verfahren die Filme zwar getrennt aufgenommen und entwickelt, aber bei der Kopie vereirigt werden, so dass also Positivfilme vorhanden sind, welche Bildreihen und Tonschriften enthalten, und bei denen die Negative
2339 getrennt entwickelt sind. Dieses Verfahren fällt klar unter den Wortlaut des Patentanspruchs 1, so dass das diesem Anspruch entsprechende Verbot der einstweiligen Verfügung den Verletzungsfall klar beschreibt.

Die Antragsstellerin meint, diese Fassung sei unklar, da hierunter auch Verfahren fallen könnten, bei denen Aufnahme, Entwicklung, Kopie und Abrollen auf getrennten Filme erfolge. Dem kann nicht beigetreten werden. Die Antragsstellerin selbst hat in der müundlichen Verhandlung erklärt, dass sie ein solches Verfahren nicht
2340 als unter das Patent fallend ansehe. Dies wäre auch nach dem Stande der Technik infolge der britischen Patentschrift 105 589 nicht möglich. Liest man aber den Wortlaut der einstweiligen Verfügung unbefangen, so fällt ein solches Verfahren auch nicht darunter, weil nach diesem immer Positivfilme vorausgesetzt sind, welche Bildreihen und photographisch aufgenommene Tonschrift enthalten, d.h. jeder Film muss beides enthalten.

Die Antragsstellerin stüzt nun ihr Verlangen auf Berichtigung des Tenors darauf, dass die Antragsgegnerin ihr keine befriedigende Ant-

wort auf ihre Anfrage gegeben have. Allein die Antragsstellerin war hierbei durchaus im Recht, denn in der Anfrage der Antragsgegnerin, die in der mündlichen Verhandlung verlesen ist, steht nicht das ganze Verfahren der Antragsgegnerin beschrieben, sondern es war nur angefragt, ob getrennt abrollende Filme unter der Verfahren fielen. Diese Anfrage konnte aber die Antragsstellerin nicht beantworten, da das getrennte Abrollen allein nicht genügt, um aus dem Patent herauszukommen, wenn in einem früheren Stadium des Verfahrens, etwa bei der Kopie, ein gemeinsamer Film vorhanden war, der zum Abrollen getrennt wird. Ein solches Verfahren würde, soweit der Standpunkt der Technik bisher zu übersehen ist, ebenfalls unter das Patent der Antragsstellerin fallen. Infolgedessen könnte die Antragsstellerin nach Lage der Sache vor näherer Klarstellung des Verfahrens der Antragsgegnerin keine befriedigende Antwort geben, ohne dass aus dieser Tatsache auf eine Unklarheit der einstweiligen Verfügung geschlossen werden dürfte.

Nun würde freilich der von der Antragsgegnerin gewünschte Zusatz in die einstweilige Verfügung aufgenommen werden könne wenn er geeignet wäre, die Klarheit der einstweiligen Verfügung zu verstärken und Zweifel im Zwangsvollstreckungsverfahren auszuschliesen. Das ist aber nicht der Fall. Gerade die von der Antragsgegnerin gewünschte Fassung kann zu Zweifeln führen. Wenn nämlich von Positivfilmen die Rede ist, die auf einem Filmband Ton- und Bildfilm enthalten, dann könnte man an das abrollende Filmband denken und infolgedessen bei getrennter Abrollung ohne weiteres annehmen,

2341

2342

2343

2344 *Plaintiff's Exhibit No. 34.*

dass ein Verstoss gegen die einstweiligen Verfügung nicht vorliegt. Dies ist aber, wie oben gezeight, nicht unbedingt der Fall. Die von der Antragsgegnerin gewünschte Fassung k o m m t also nicht in Frage. Ebenso erscheint es nicht sweckmässig, diese Fassung zu wählen und durch einen weiteren Zusatz am Schluss der Formel bestimmte Ausnahmen zu machen, da denn die eistweilige Verfügung kaum mehr verständlich wäre. Es muss daher bei der bisherigen Verfügung sein Bewenden haben.

2345

Wenn die Antragsgegnerin weiter vorträgt, dass die einstweilige Verfügung bereits zu irreführenden Zeitungsnachrichten beführt habe, so ist nach der Ueberzeigung des Gerichts nicht die Fassung der einstweiligen Verfügung Schuld an derartigen Missverständnissen. Liest man die einstweilige Verfügung unbefangen, dann kann man ohne weiters erkennen, was damit gemeint ist.

Ueber die Kosten entscheidet § 91 ZPO.
gez. Dr. Hamburger, Kopf, Dr. Knapp.

2346

Ausgefertigt
gez. Unterschrift, als
Urkundsbeamter der Geschäftsstelle des
L.S. Landgerichts I.

Ausgefertigt
gez. Unterschrift, Justizsekretär,
als Urkundsbeamter der Geschäftsstelle
des Landgerichts I.

Dass

Dass vorstehende Abschrift mit der mir vorliegenden Ausfertigung des Urteils des Landge-

Plaintiff's Exhibit No. 34. 2347

richts I Berlin vom 1. März 1929 wörtlich übereinstimmt beglaubigt ich hiermit als Notar.

Berlin, am 31. Oktober 1932

Dr. Gerhard Jacoby
(Seal) Notar
im Bezirk des Kammergerichts

Die Unterschrift des Notars Dr. Gerhard Jacoby wird beglaubigt. Der Notar ist zur Beglaubigung der Urkunde befugt. 2348
Die Form entspricht dem deutschen Gesetze.
Berlin-Charlottenburg, den 31ten Oktober 1932.

Der Präsident
des Preussischen Landgerichts III
In Vertretung:

Quäbicker,
(Seal) Landgerichtsdirector.
80.- RM.

2349

Gerichtsgebühren
sind entrichtet.
Langbehn,
justizinspektor,
Landgericht III
German Reich. City of Berlin,

Consulate General of the United States of America, ss.:

I, John F. Stone, Vice Consul of the United States of America, at Berlin, Germany, duly com-

2350 *Plaintiff's Exhibit No. 34.*

missioned and qualified, do hereby certify that Quäbicker whose true signature and official seal are, respectively, subscribed and affixed to the foregoing instrument, was at the time of subscribing the same an official of the Prussian Landgericht III. at Berlin, of the German Reich, duly commissioned and by law authorized to execute such acts, and that his signature and official seal affixed thereto are genuine, and as such are entitled to full faith and credit.

2351 In Witness Whereof I have hereunto set my hand and the seal of the Consulate General at Berlin, Germany, this 1st day of November, 1932.

John F. Stone,
Vice Consul of the United States
of America.

(Seal)

Service No. 06484
$2. — M8.48

2352 ($2.00 Fee Stamp)

Plaintiff's Exhibit No. 34. 2353

CERTIFIED TRANSCRIPT.

(Stamped Seal)

Dr. Gerhard Jacoby
Notary in the District
of the Prussian
Supreme Court.
M.
33.Q.5.29

6

In the Name of the People! 2354

Handed down
March 1, 1929.
(Signed) Zeiss, official,
as document clerk
of the office.

In the matter of

the Tonbild-Syndikat Aktiengesellschaft, of Berlin, Jägerstrasse 6, represented by its Board of Directors, Dr. Hans Henkel and Arthur Frischknecht,

Petitioner, 2355

—Counsel: Attorneys-at-law Theodor Kallmann, of Berlin SW 47, Yorkstrasse 76—

vs.

the Klangfilm G.m.b.H., of Berlin, Askanischer Platz 4, represented by its business managers Dr. Kirn and Dr. Akemann,

Defendant,

—Counsel: Attorneys-at-law Dr. Danziger and Dr. Nünninghoff, of Berlin W 10, Margaretenstrasse 8—

because of patent litigation—value involved in the litigation, 100,000 Reichmarks—,

2356 *Plaintiff's Exhibit No. 34.*

the 16th Civil Chamber of State (Superior) Court I in Berlin, upon the oral hearing of February 22, 1929, the participating justices being Landgerichtsrat Dr. Hamburger, District and State Judge Kopf, and Court Assessor Dr. Knapp, has handed down the following decision:

> The preliminary injunction of February 8, 1929 is confirmed, and the defendant is sentenced to bear the further costs of the proceeding as well.

2357 *Facts.*

The petitioner is a general licensee of German Patent 368,383, issued to be effective from April 15, 1921, claim 1 of which reads:

> "Process for the production of positive films which contain series of pictures and photographically recorded tone record, characterized by the fact that the negatives are developed separately."

Reference is made to the patent.

2358 The petitioner alleged that the defendant was about to present, on February 8, 1929, tone-picture films (so-called Photophone films) which had been produced by the General Electric Company. The production of these films is effected, as appears from the book *Transactions of the Society of Motion Picture Engineers*, page 87, in this manner, that the tonefilm and the pressure film* are exposed and developed separately and are then united in a copying machine, so that a combined copy is produced on a single film.

*[Translator's Note.—The word *Druckfilm*, "pressure film", is probably a clerical error for *Bildfilm*, "picture film".]

Plaintiff's Exhibit No. 34.

This process, it was alleged, falls under German Patent 368,383. In view of the early stage of development of this branch of industry, such patent infringements constitute a special danger for the petitioner. 2359

On the basis of these allegations the petitioner obtained the preliminary injunction of February 8, 1929, by which the defendant was forbidden "to employ a process for the production of positive films which contain series of pictures and photographically recorded tone record," in which process the negatives are developed separately. 2360 The defendant filed an objection to this preliminary injunction.

The petitioner moves that the preliminary injunction be confirmed.

The defendant moves that the preliminary injunction be set aside to this extent, that the words "upon *one* film strip" be inserted after the word "which".

It alleges that it does not intend at present to attack the preliminary injunction in other respects, but that the wording is obscure. It might at first be supposed that it relates only to films 2361 on which tonefilms and picture films are contained together. However, according to the justification of its petition, the petitioner is also attacking films which the defendant is producing in Germany. These are, however, produced in this way, that the tone and the picture are always on separate film strips, not only in the recording, but also in the developing, copying, and unreeling. This process of production must not be forbidden by the preliminary injunction, particularly inasmuch as it was already disclosed by British Patent 105,589, of which a copy is pre-

2362 *Plaintiff's Exhibit No. 34.*

sented. The petitioner has also, it is alleged, given no satisfactory answer to the defendant's inquiry as to whether it derives rights from the preliminary injunction against tonefilms insofar as the tone and picture unreel from separate film strips. In view of this state of affairs, it is absolutely necessary to alter the wording of the preliminary injunction.

The petitioner argued against this.

For further details reference is made to the recited contents of the briefs and to the exhibits
2363 filed to establish credibility.

Grounds for the decision.

The defendant does not contest the existence of a reason for the injunction. As a matter of fact, there actually is a reason, since the tonefilm industry is just developing greatly and just at this time patent infringements might cause the petitioner incalculable harm.

The injunction claim likewise cannot be contested in itself. According to German Patent 368,383 it is highly advantageous to place the
2364 tone record and the picture series in talking films upon one common vehicle, one film strip. In this connection difficulties arise, however, inasmuch as in the recording the picture series may be overexposed or underexposed, while the series of tone signs is always normally exposed. These differences cannot be equalized in the developing. The inventor accordingly set himself the problem of abolishing these difficulties, and he solves this problem by this means, that the negatives are developed separately. In this process it is immaterial whether the exposure takes place separately or whether it is made on one

Plaintiff's Exhibit No. 34. 2365

film, which is separated for the developing. It is likewise immaterial whether the production of the unitary positive film is effected by copying the two negative films successively upon the same positive film or whether the two negative films are first pasted together and the copying is then done in one operation.

According to this, the range of protection of the patent extends to a process for the production of positive films which contain both picture series and tone record, in which process the 2366
negatives are developed separately. Nor does the state of the art controvert this interpretation, insofar as material has thus far been supplied by the defendant. British Patent 105,589 describes a process in which separate picture films and tone films are present both in the exposure and in the developing and copying. According to this patent, the unreeling of the films is as a rule also effected separately, with synchronous consociation. Solely on page 6, lines 30 to 32, is there a mention of the possibility of pasting the two positive films together at the 2367
overhanging edges, after the copying and before the unreeling, so that one film is actually present. Until the stage of the unreeling, at all events, this patent knows of no common film.

With this interpretation of the plaintiff's patent there exists no doubt that the process which, according to the article that has been presented, is employed by the General Electric Company falls under the plaintiff's patent, since in this process the films are, to be sure, exposed and developed separately, but are united in the copying, so that there are present, accordingly, positive films which contain picture series and tone

2368 *Plaintiff's Exhibit No. 34.*

records and in which negatives have been developed separately. This process clearly falls under the wording of patent claim 1, so that the prohibition of the preliminary injunction, which is in conformity with this claim, clearly describes the case of infringement.

The petitioner* believes that this wording is obscure, since it might also comprise processes in which the exposure, developing, copying, and unreeling are effected on separate films. We cannot assent to this view. The petitioner itself
2369 stated, at the oral hearing, that it does not regard such a process as falling under the patent. Nor would this be possible according to the state of the art in consequence of British Patent 105,589. But if one reads the text of the preliminary injunction without prejudice, such a process does not fall under it either, because according to the latter there is always a presupposition of positive films which contain picture series and photographically recorded tone record, *i. e.*, each film must contain both.

The petitioner bases its demand for correction
2370 of the tenor on the fact that the defendant has not given it a satisfactory reply to its inquiry. But the petitioner was altogether right in so doing, for in the inquiry of the defendant, which was read at the oral hearing, there is no description of the entire process of the defendant, but there was merely an inquiry as to whether separately unreeling films were comprised in the process. But the petitioner was unable to answer

*[Translator's Note.—Comparison with the statement of facts above will show that the terms "petitioner" and "defendant" have been erroneously interchanged in this paragraph and the first part of the following paragraph.]

this inquiry, since separate unreeling alone does not suffice to escape from the patent, if in an earlier stage of the process, say in the copying, a common film was present, which is separated for the unreeling. Insofar as the point of view of the art thus far can be surveyed, such a process would likewise fall under the patent of the petitioner. Consequently, as the matter stood, the petitioner was unable, prior to more detailed elucidation of the process, to give the defendant a satisfactory reply without the result that from 2372
this fact an obscurity of the preliminary injunction might be inferred.

Now of course the addition desired by the defendant could be included in the preliminary injunction, if it were suitable for increasing the clarity of the preliminary injunction and for precluding doubt in proceedings for compulsory execution. Such is, however, not the case. Precisely the wording desired by the defendant may lead to doubts. For if there is a mention of positive films which contain a tone film and a picture film on one film strip, then one might 2373
think of the unreeling film strip and consequently, in case of separate unreeling, assume without further ado that there is no violation of the preliminary injunction. As shown above, however, this is not unqualifiably the case. The wording desired by the defendant accordingly does not come into consideration. It likewise does not seem expedient to choose this version and to make definite assumptions by means of a further addition at the end of the formulation, since in that event the preliminary injunction would hardly be intelligible any more. The injunction as hitherto existing must therefore be allowed to stand.

2374 *Plaintiff's Exhibit No. 34.*

If the defendant further alleges that the preliminary injunction has already led to misleading newspaper reports, the wording of the preliminary injunction is, in the opinion of the court, not to blame for such misunderstanding. If one reads the preliminary injunction without prejudice, one can readily discover what it means.

The decision as to costs is based on Section 91 of the Code of Civil Procedure.

2375 (Signed) Dr. Hamburger, Kopf, Dr. Knapp.

Issued

Signature as
Document Clerk of the Office of
L.S. State (Superior) Court I.

Issued

Signature, Court Clerk,
as Document Clerk of the Office of
State (Superior) Court I.

2376 I hereby certify as notary that the foregoing transcript corresponds word for word with the copy of the decision of March 1, 1929, of State (Superior) Court I, Berlin.

Berlin, October 31, 1932
Dr. Jacoby

Notary
in the District of the State
(Superior) Court

(Seal)

Plaintiff's Exhibit No. 34. 2377

Dr. Gerhard Jacoby
Notary in the District of the
Prussian Supreme Court

Computation of Charges

Value 100,000 RM
Fee 550 of the Law Relating
to Court Cost, Sec. 1,
20 RM

Dr. Jacoby 2378
Notary.

The signature of the notary Dr. Gerhard Jacoby is authenticated. The notary is authorized to certify the document. The form conforms to German law.

Berlin-Charlottenburg, October 31, 1932

The President
of the Prussian (Superior) Court III
By authority: Quäbicker, 2379
(State) Superior Court, Director.
(Stamped seal)

The President of the
Prussian (Superior) Court III
Berlin

80 RM
In court fees have been paid
Langbehn
Judicial Inspector,
State (Superior) Court III.

2380 *Plaintiff's Exhibit No. 34.*

German Reich, City of Berlin,
Consulate General of the
United States of America. } ss.:

I, John F. Stone, Vice Consul of the United States of America at Berlin, Germany, duly commissioned and qualified, do hereby certify that Quäbicker whose true signature and official seal are, respectively, subscribed and affixed to the
2381 foregoing instrument, was at the time of subscribing the same an official of the Prussian Landgericht III at Berlin of the German Reich, duly commissioned and by law authorized to execute such acts, and that his signature and official seal affixed thereto are genuine, and as such are entitled to full faith and credit.

In Witness Whereof, I have hereunto set my hand and the seal of the Consulate General at Berlin, Germany, this 1st day of November, 1932.

2382 (Signed) John F. Stone
Vice Consul of the United States
of America

Service No. 06484
$2.—M 8.48

(Seal of the American Consulate
General, Berlin, Germany.)
($2.00 Fee Stamp)

PLAINTIFF'S EXHIBIT No. 35

A SYSTEM OF MOTION PICTURES WITH SOUND

H. B. MARVIN*

IT IS the purpose of this paper to present a brief sketch of a method of recording and reproducing sounds to accompany the action of motion pictures and to demonstrate one form of the results.

From the crude devices of thirty years ago have grown a highly developed art and a large industry relating to motion pictures. The combination of this art with a new one, that of simultaneous reproduction of sounds, requires for satisfaction a similar degree of development in the latter. Although perfection is not claimed yet, it is believed that the system to be described has improved the quality of the sound to the point where its use in combination with the older art results in improved entertainment.

The chief requirements of a good system combining sound and pictures are: first, synchronism between sound and picture; and second; distortionless recording and reproducing; that is, a high degree of faithfulness of sound both in loudness and quality.

Lack of synchronism may be caused by differences of speed of sound and picture either in the recording or reproducing process. Differences between original and reproduced sounds, called distortion, may be caused by mechanical, optical, photographic, electrical, or acoustical characteristics of the system.

Of the mechanical requirements for good reproduction, one of the most important is the ability of the machinery to move the film past the sound record aperture at uniform speed since pulsations in film speed due to non-uniform motion of gears, sprockets, etc., may result in bad reproduction. Weaving, curling, scratches, and dirt spots are other causes of mechanical distortion.

The effects of optical devices on the quality have been studied and a design obtained which is free from all except inherent limitations; namely, those arising from the fact that an infinitely narrow slit is not attainable.

Graininess of film has been minimized by the use of positive stock for the negative on which the sound is recorded. Errors due

* General Electric Co., Schenectady, New York.

to wrong exposure and development are small with this system because the results desired are constant density, minimum fog, and sharp edges. A density of 1.3 and development to unity gamma are aimed at, but these values are not critical. The uniformity of film speed during printing of the sound is as important as in the other processes, and no creeping or slipping is allowable.

Electrical distortion may be caused by failure of photo-electric devices to convert accurately the variations of light into electrical current; by failure of the amplifier to perform properly; and by lack of steadiness of the power supply.

The experience of the General Electric Company in the development of high quality loud-speakers has been utilized and it is believed that the present form represents the best obtainable at the present time. Reverberation in the room in which the sound is reproduced may, of course, affect the results and should be treated in each individual installation.

Another form of disturbance, while it is not properly called distortion, should be mentioned. This is the presence of extraneous noises, such as sprocket hum, mechanical vibration noises, radio interference, etc.

The major points in the problem of development of the system have been outlined. No attempt will be made here to discuss in detail the solution of the above problems. A fairly comprehensive knowledge of the characteristics of the process has been obtained in the laboratory and steady progress is being made toward the complete elimination of the faults. Thus the thirty years handicap confronting those who are working on the addition of sounds to the motion picture is being overcome.

The system which is to be demonstrated may be outlined as follows: pictures made with a standard camera driven at constant speed result in a picture negative of the same size as in the present art. The sound negative is photographed on a separate positive film moving in synchronism with the camera film. The two films are separately developed each to its own proper density, then combined in a printing machine to produce a combination print on a single film. The shape of the picture positive is maintained but the size is made slightly smaller to accommodate the sound record. The reproduction on the screen is of the standard shape, the sound record being masked in the projector. Dimensions of picture and sound record in the print are shown in Fig. 1. The problem of

synchronism has been solved by the use of synchronous motors both in recording and reproduction.

There are two types of sound records in use. One is known as "variable density—constant area" and the other as "constant density—variable area." A theoretical treatment of the two types has been given by A. C. Hardy[1] in a previous paper. In that paper it is shown that there are certain advantages in the variable area

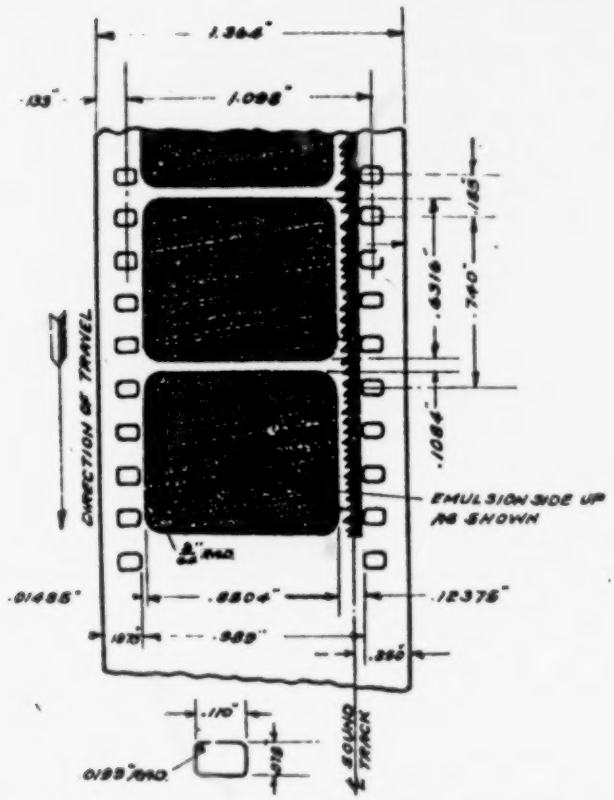

FIG. 1. Dimensions of film print bearing sound record

system which are likely to result in better reproduction with greater allowable deviations in exposure and development. This type of sound record is therefore used in our system. Examples are shown in Fig. 2 of sound records of pure tones, clarinet, French horn, and full orchestra. The recording and reproducing speed is 90 feet

[1] *The Rendering of Tone Values in the Photographic Recording of Sound*. Trans. S.M.P.E., *11* No. 31, 475 (1928).

per minute. The picture and sound are printed about 15 inches apart with the sound above the picture as seen in the projector. Sound is recorded through an optically imaged slit 0.001 inch by 0.100 inch and is reproduced by means of an optically imaged slit 0.001 inch by 0.110 inch, although narrower slits have been used.

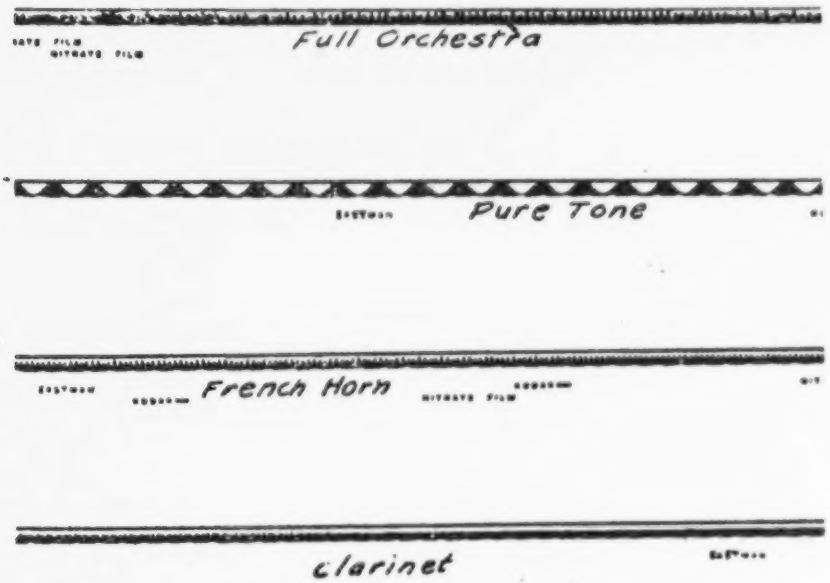

FIG. 2. Typical sound records.

Conversion from light pulsations to electrical current is accomplished by means of a gas-filled photo-electric cell having a caesium cathode. The reproducing light is obtained from a 50-watt, concentrated filament Mazda C lamp located on the projector. This light passing through the film, on which the blackened area is proportional to the sound, causes pulsations of current in the photo-electric cell. The alternating component of this current is then carried to the amplifier.

The power is amplified and controlled to the value necessary to operate the loud-speakers. The size of amplifier depends upon the class of service for which it is intended. The largest amplifier is capable of delivering 200 watts of undistorted power to the loud-speakers, which is believed to be sufficient for the largest theater.

The smallest size is intended to operate a single type 104 R.C.A. loud-speaker.

The loud-speakers are the moving cone type used in groups and assembled with baffles to increase the efficiency of sound radiation. The number of loud-speaker units ranges from one to twelve depending upon the size of installation. Each unit may be adjusted in horizontal or vertical directions so as to produce uniform distribution of sound throughout the theater. Power supply for the

FIG. 3. 200 watt amplifiers in duplicate.

amplifiers and for the fields of the loud-speakers is obtained from a motor generator set, the starting and adjustment being controlled at the amplifier. Amplifiers are supplied wholly or partly in duplicate for emergency operation. Two types of reproducers have been developed. One has an attachment for the Simplex projector inserted between the upper magazine and the projector head. A constant speed motor is substituted for the variable speed mechanism of the standard projector. The other is a complete projector in

which sound and picture mechanisms are contained within a single housing. Either of these arrangements may be run at constant speed for sound and picture or at variable speed for picture only.

The apparatus used in the recording process consists of camera, sound recorder, amplifier, sound collector, and the necessary power supply devices. Standard cameras are used except that a synchronous motor is substituted for the hand crank or the variable speed motor and a device is added to mark on the film the starting

FIG. 4. Loudspeaker group.

and stopping points. The sound recorder is substantially built to operate with little vibration and uniform speed. It is also driven by a synchronous motor. The film is carried over a drum with loops between the drum and sprockets. This has proved to be a desirable means of eliminating mechanical distortion caused by sprocket teeth and gears. A small photometer is used to check the exposure. The optical system is somewhat similar to that used in the reproducing device; namely, concentrated filament lamp and system of

lenses to produce an image of a slit on the film. The variation of exposed area on the film is obtained by means of an electromagnetic galvanometer similar to that used in oscillographs. The moving system comprising a current-carrying strip and a small mirror is so designed that the response is practically uniform from zero to

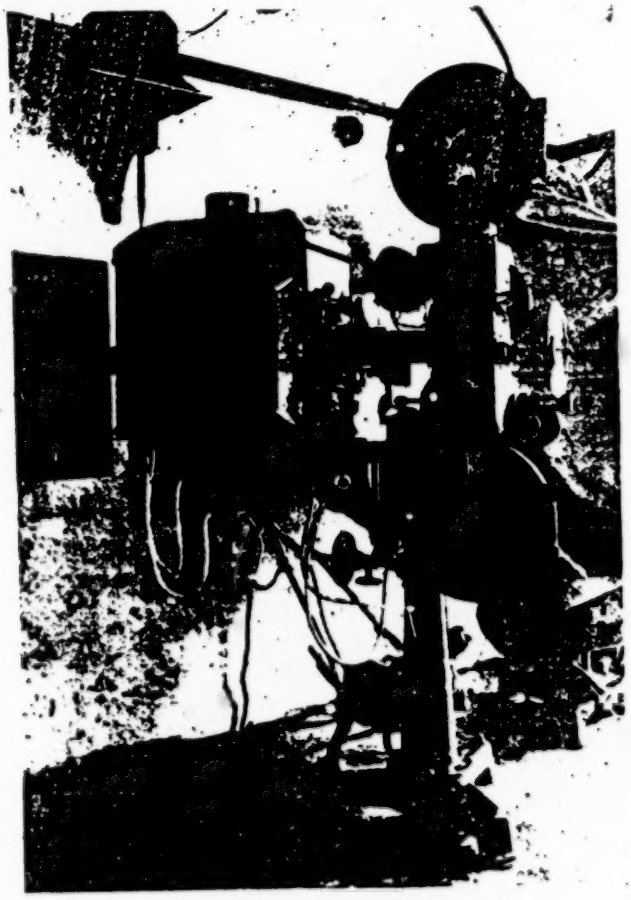

FIG. 5. Projector-reproducer

6000 cycles. This covers the useful range in speech and music. The sound collectors are of the type known as condenser microphones and may be used either singly or in groups. Each microphone is connected to its own two stage amplifier after which all are connected to a power amplifier adapted to control the volume of each collector separately and also the volume after combining.

The power amplifier may be located near the sound recorder and is equipped with a monitor loud-speaker. Power for the amplifier

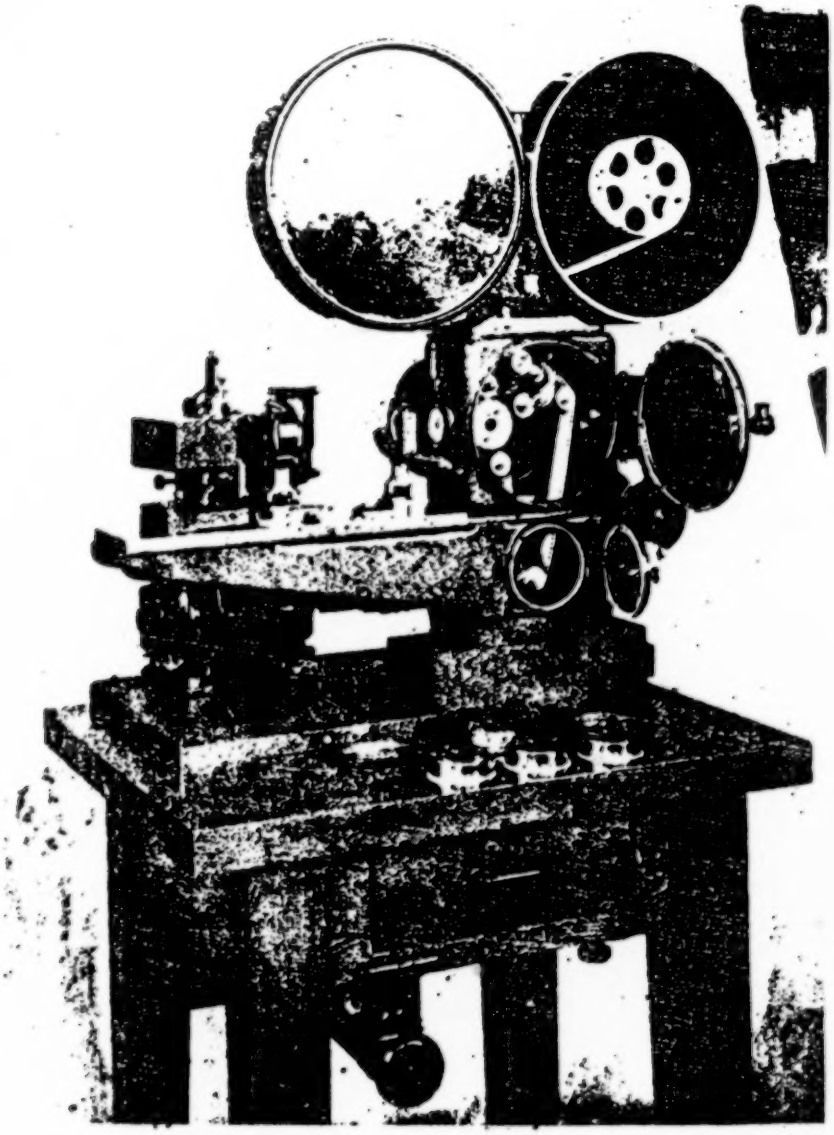

FIG. 6. Sound recorder.

and the recorder is supplied by a storage battery and a small motor generator set. Recorder and power amplifier are preferably located

in a separate room or in outside work on a truck. Only the sound collectors and the cameras need be at the scene of the picture.

The usefulness of the combination of sound and picture is beginning to be felt. One application is to record action and sound of scenes in which both originate and are recorded at the same time. The sound may be speech, music, or noises which are intended to enhance the effect of realism. In this field a new technique and a new art remain to be developed and it, therefore, excites the greatest interest in experimentally minded persons.

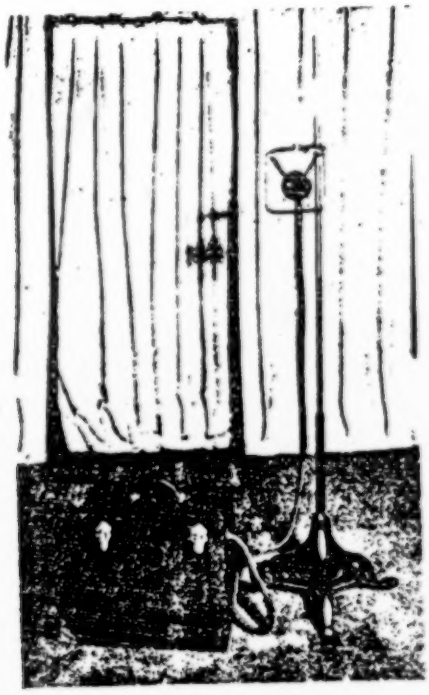

FIG. 7. Sound collector.

The reproduction of music to accompany a picture is a quite different field in which the sound recording may be done either at the time of the action or later. Both methods are feasible and each has its advantages. The method in which music is recorded after the final form of the picture has been decided upon seems on the whole to be preferable. The highest quality of reproduction is essential in this application, for its primary purpose is to provide better music in locations where the best is not already available.

This principle has been kept constantly in mind during the development of the present system.

A third application is the reproduction on film of stage sound effects where the primary object is accurate timing and dramatic effects, and the primary requirements are synchronism and adequate volume of sound

Examples of motion pictures with sound have been obtained in all three fields of application. The fidelity of reproduction can now be said to be fairly satisfactory; for example, speech has been recorded which is scarcely distinguishable from the original voice.

FIG. 8. Recording amplifier.

The same is true with instrumental music. Reproduction of explosive sounds has not yet reached the same degree of development. These are probably the hardest sounds to reproduce. It has been found feasible to transmit music and voice currents distances up to 200 miles over telephone lines and record with satisfactory results. The recording and reproduction of stage sound effects has proved practical as evidenced by the film *Wings*, although in this case the sound and picture prints are on separate films.

The demonstration which follows is an example of the recording of music to accompany a motion picture. The recording was done at a later time and in a different place from the photography. It

will be observed that in a few scenes there are opportunities for simultaneous recording of sound occurring during the action which leads to the conclusion that probably the combination of accompanying music with incidental sound effects will be desirable.

DISCUSSION

VOICE: Is the recording done on the film on which the picture is taken or on a separate film?

MR. MARVIN: The picture is taken on a separate negative, and the two are combined in the printer to form a combination print on the positive.

VOICE: If that is the case, do you use film wider than standard film?

MR. MARVIN: It is standard 35 mm. film, and to obtain the space for the sound track, we reduce the dimensions of the picture frame 14 per cent and use a shorter focus lens in the projector to get the normal size on the screen.

MR. WILLAT: Is it necessary to dupe the film to get the sound record?

MR. MARVIN: No, it is not; it is made direct from the negative.

MR. CRABTREE: How expensive an outfit would it require for 16 mm. film? Could a home radio apparatus be utilized for the amplification?

MR. MARVIN: Not having done it, I can't say, but I should say that probably in the same price range as other luxury devices we have.

MR. CRABTREE: Could we utilize our existing radio apparatus?

MR. MARVIN: A high quality set could be utilized without question.

VOICE: In some processes they use large horns with no air pocket. Is there any reason why the diaphragm type of speaker is used?

MR. MARVIN: The answer to that question involves a compromise. The horn type loud speaker is more efficient because it will give more sound per unit of power supplied. All horns have resonant frequencies, and with the cone type of loud speaker, this effect of of the horn is eliminated. One of these baffle members is a horn with 180° opening, and it is impossible to get horn resonance. We think we get better quality at the expense of more power required.

MR. CLARK: Is your projection print a print from a duplicate negative?

MR. MARVIN: The picture negative and sound record negative are fed simultaneously through a printer which prints the positive in one operation. The prints are, therefore, made from original negatives and not from dupes.

MR. RAGIN: Besides the difference in width of the sound track and the fact that the sound is recorded on a separate film, what differences are there between your method and the Movietone?

MR. MARVIN: Movietone has a variable density record, while ours is of the variable area type. The latter requires a sound track which has a high degree of contrast and that is all. We aim at an exposure which will give us a density of about 1.3 and develop to a gamma of 1, but these are not critical. The variable density system requires fairly close control of exposure and development in order to eliminate distortion due to the curvature of the H. & D. curve.

MR. CLARK: Could the two films be run in all apparatus?

MR. MARVIN: I haven't tried that, but I will say that during the course of development we worked with variable density films as well as variable area films, and both reproduce well. The only change necessary, I think, would be in the reproducing slit, which is a small metal piece which slides into the machine.

MR. WISSON: Does the technique of your system as you worked it out embrace such flexibility that you can go into the field for news reels?

MR. MARVIN: I have not been in the field myself on location, but I can say that the apparatus is sometimes built on a truck, and all the apparatus stays on the truck except the camera and sound collector.

VOICE: What effect do grease or scratches on the film have on the sound?

MR. MARVIN: That depends on the kind of grease or scratches. We can run a film between a thousand and fifteen hundred times before we prefer to have a new one. Grease uniformly distributed does no harm. Scratches parallel to the motion do no harm. Little digs in the film will cause a noise like that (demonstrating).

MR. CRABTREE: The film we saw was scratched in places, but I didn't notice any distortion of sound. The sound is on the same film, so we can assume that the record was scratched to the same extent as the picture area.

MR. WISSON: Does your apparatus embrace the use of a projector developed independently in your laboratory or plant, or can the device be attached to any standard projector?

MR. MARVIN: We have a projector built completely in the laboratory and have attachments for Simplex projectors.

MR. SPRUNCK: With duplicate negatives is the sound distorted?

MR. MARVIN: Any duplication process hurts quality to some extent.

MR. SPRUNCK: When printing the positive wouldn't it be possible to leave an unexposed area along the edge and have the sound negative printed on later?

MR. MARVIN: Yes, we have made many in that way.

MR. INGMAN: How do you judge the distance between your aperture and that to your sound record and still allow for the loop?

MR. MARVIN: That is obtained by synchronizing marks put on the picture negative and on the sound negative, which is done if both are recorded simultaneously. The picture you have seen was made weeks before the sound record. It is a case of making a mark on the picture film and synchronizing the sound with that. For the pistol records, they can be spliced in by observing the picture. Our sound aperture is about fifteen inches from the picture.

MR. GREEN: Regarding equipment for a theater, have you attachments for the various projectors?

MR. MARVIN: Yes, although the mechanical condition of most projectors in the booths is not quite good enough to insure good reproduction. Imperfections in gears don't affect the picture but sometimes do affect the sound.

MR. GREEN: Would your attachment allow me to use the apparatus and then the regular pictures without sound?

MR. MARVIN: Yes.

MR. GREEN: Is a separate generator also necessary?

MR. MARVIN: You must have a source of power for the amplifier, which may be a rectifier or generator set. We prefer the latter.

MR. GREEN: Is any other apparatus necessary besides those and your stage amplifiers or horns?

MR. MARVIN: The projector must be driven at constant speed.

MR. GREEN: That is understood.

MR. PHYSIOC: Do you make all the prints from your records by projection?

MR. MARVIN: No, some are made by contact; some, by projection.

MR. PHYSIOC: Is there any improvement in tone by direct contact printing as opposed to projection printing.

MR. MARVIN: As far as we have been able to judge, equally good results for the sound may be obtained by either method.

MR. PHYSIOC: Can you get sound reproduction from the negative-records?

MR. MARVIN: Yes. The negative run in the projector must run with the emulsion side away from the light and requires a slight change of focus.

MR. DEVAULT: What is the function of the baffle board and why the multiplicity of speakers?

MR. MARVIN: The function of the baffle board is to increase the sound radiation at low frequencies. The baffle board or other device should have dimensions comparable with the wave-length of the sound.

MR. DEVAULT: Do you mean low tones?

MR. MARVIN: Yes. The second question I can answer this way: In a theater, the elevation and the floor plan require distribution of the sound energy through large angles, and in order to accomplish even distribution, we use multiple units and direct them.

MR. SPRUNCK: Does a heavy print give a better quality than a thin print?

MR. MARVIN: It gives more volume than a thin print.

MR. GORDON: With your particular photo-electric cells, what is the color sensitivity across the spectrum?

MR. MARVIN: A caesium cell is used. I assume your question bears on the use of tinted film?

MR. GORDON: Not necessarily.

MR. MARVIN: Experiments have shown that the tinted films of the lighter shades—amber, green, yellow, lavender, pink—have a negligible effect on the volume but none on the quality. Deeper dyed films may be compensated for by the amount of amplification used.

MR. GORDON: Is it more sensitive to the red or the blue?

MR. MARVIN: It is more sensitive to the blue.

MR. WISSON: I understand that DeForest and Movietone have the sound on the right-hand side and below the projection aperture.

MR. MARVIN: The sound track is on the right-hand side, on the same side as in the Movietone. The sound precedes the picture in the projector exhibited.

MR. CRABTREE: Were the speakers being operated at the maximum capacity or the minimum?

MR. MARVIN: Nearly minimum.

MR. CRABTREE: How many times louder could you make the music and still have it undistorted?

MR. MARVIN: About sixfold.

MR. NYE: With reference to the illusion in the case of speaking pictures regarding the fact that sometimes the character and the sound do not appear to have the same location, how is it affected by the distance of your pick-up apparatus and the camera and the fact that you have a multiplicity of loud speakers instead of a single one?

MR. MARVIN: That is a difficult question. I think the most important feature necessary for the illusion is absolute synchronism. A displacement which is too small to be analyzed visually as a time lag does have the effect of separating the voice from the figure. A multiplicity of loud speakers apparently has no effect.

MR. PHYSIOC: Do you adopt a projection system of printing merely to maintain the proportions of the picture?

MR. MARVIN: That was the principal reason.

MR. PHYSIOC: You can take my vote to destroy the proportions and maintain photographic quality if the suggestion is any good to you.

MR. CRABTREE: As far as tone reproduction goes, it is possible to get just as good results by optical printing as by contact.

MR. GREEN: What happens to the sound continuity when you have sprocket hole tears or the film is damaged and one or two frames are cut out? What would happen in the case of the overlap when cementing two frames together?

MR. MARVIN: At least ten splices were made in the picture you saw tonight. Does that answer your question?

MR. GREEN: Yes. In the dialogue, if two or three frames were cut out, what would happen?

MR. MARVIN: Only a fraction of a syllable would be lost. I think the effect is more pronounced on music than speech because the rhythm is slightly interrupted by a cut.

MR. GRIFFITH: I assume that the volume of sound for a given setting of the reproducing system depends upon the amount of light going through the sound record, as that determines the amount of light affecting the cell. Therefore when you make a light or dark print the only thing affected is the volume, as long as the edge of the sound record is sharp.

MR. MARVIN: Unless exposure is carried to the point of fog. The first effect is to fill up the valleys of the finest vibrations. The effect on the ear is as though the higher pitched tones were unduly suppressed. The slit is about one mil in width, so that some high pitches cannot be recorded faithfully. The upper tones of a violin may reach as high as 2,000 cycles. We have records containing 10,000. The effect of the slit width is to reproduce the highest tones at a relatively lower volume than the lowest tones. That begins to take effect at about 2,000 cycles, and very slowly at first. That effect can be compensated to a large degree in the amplifier, but the ideal would be a slit considerably narrower than 1 mil. We have made records at 0.2 mil slit width. The only expense is the amount of light necessary. As the slit is decreased, the amplification of light must be increased.

MR. GRIFFITH: Those sound records which can conveniently be made separately from the picture, as in pistol shots, are the easiest form of application. The application which seems to me to have the greatest possiblities is dialogue. Have you worked on that?

MR. MARVIN: Yes.

MR. GRIFFITH: Does it seem difficult to get a perfect illusion; for instance, of people talking together in a room? It would seem to me that any position of the speakers other than behind the screen would destroy the illusion.

MR. MARVIN: It has not so far. I think it is because we are so used to watching the lips of speakers on the screen that we unconsciously will do the listening by assuming that it comes from the lips. If exact synchronism is obtained, the illusion is very good.

MR. GRIFFITH: Do you feel that it is essential to continue to make the sound records separately, or do you feel that the technique will be developed so that the sound and the picture can be recorded on the same negative at the same time? Do you think this desirable or difficult?

MR. MARVIN: We believe that the sound record can be made better on a separate film partly because it removes the sound recording from apparatus which must have intermittent motion. Then, it also allows the sound recording to be done in a separate room or booth in which the sound can be monitored so that the recorder can judge the quality before and during recording.

MR. BIRD: Do you use positive film in order to eliminate grain?

MR. MARVIN: Yes.

MR. BIRD: With regard to scratches and oil on the sound track: What are the effects of after-treatment, such as waxing and varnishing?

MR. MARVIN: We have often waxed film but have not tried varnishing.

MR. CRABTREE: The application of a coating of wax over the entire surface has no apparent effect.

MR. BIRD: I am referring to circulars I have had from a concern who process films for the purpose of prolonging their life and I understand that it is a chemical put on the emulsion before the prints are sent out. It is not a waxing process but a coating on the surface of the print.

MR. CUFFE: I think this is a varnish process, which is not used to any extent as yet. I don't see how it would affect the sound at all.

MR. MARVIN: In general, any transparent substance on the film will not affect sound any differently from the picture.

MR. CRABTREE: I think the answer to this question is contained in a previous paper of mine. The film is treated with formalin vapors or by the application of a Bakelite or cellulose nitrate varnish. Provided that the applications are uniform, they will not affect the sound.

MR. CLARK: In recording dialogue in a picture, how would you take care of a lap dissolve?

MR. MARVIN: Would you have speech going on during the dissolve?

MR. CLARK: Yes; one action fading out with speaking and a new one coming in, where you had the voices mixed together.

MR. MARVIN: I wouldn't do it that way.

MR. CUFFE: They don't use lap dissolves at all in the Movietone. It would be only a conglomeration of noises when the two were superimposed.

PLAINTIFF'S EXHIBIT No. 36

105,589

PATENT SPECIFICATION

Application Date, Apr. 13, 1916. No. 5448 16.
Complete Accepted, Apr. 13, 1917.

LIBRARY
JUN 12 1917
U. S. PATENT OFFICE

COMPLETE SPECIFICATION.

Talking Picture Apparatus.

I, HENRY CHARLES BULLIS, Electrical Engineer, of Redwood Falls, Minnesota, United States of America, do hereby declare the nature of this invention and in what manner the same is to be performed, to be particularly described and ascertained in and by the following statement:—

The present invention relates to an improved apparatus for simultaneously taking and reproducing picture and sound records, thereby producing what are commonly termed "talking pictures." The present invention consists essentially in the provision of a means whereby the picture record and sound record can be given the necessary individual treatment for developing them in the most effective manner and then readily assembled in such a manner as to bring the picture record and sound record in proper position to produce perfect synchronism when the pictures and sound are reproduced.

Further, the provision of a means which admits of different emulsions and different treatments being employed in making the picture record and sound record, which provides corresponding indentification marks upon the picture record and sound record so that there will be no difficulty in assembling the two records in the proper relation for the reproducing operation, which admits of the picture record and sound record being handled separately while being developed and subsequently joined together so as to produce a single film if such is desired, and which provides for reproducing the sound from a continuously moving portion of the film and the reproduction of the picture by an intermittently moving portion of the film.

For a full understanding of the invention, reference is to be had to the following description and accompanying drawings, in which:—

Figure 1 is a diagrammatic view of a form of apparatus suitable for simultaneously making the picture and sound records, the casing being shown in section.

Figure 2 is a vertical sectional view on the line 2—2 of Figure 1, looking in the direction of the arrows.

Figure 3 is a detail view of the microphone controlled source of light which is used for making a photographic sound record upon the emulsion of the sound record film.

Figure 4 is an enlarged horizontal sectional view through the lens and a portion of the casing which is used in connection with the microphone controlled source of light to make the sound record upon the film.

Figure 5 is a vertical sectional view through the same on the line 5—5 of Figure 4.

Figure 6 is a transverse sectional view on the line 6—6 of Figure 4.

Figure 7 is a detail view of one of the cog wheels which is employed for moving the films through the record making apparatus.

Figure 8 is a diagrammatic view similar to Fig. 6, showing the reproduction apparatus.

Figure 9 is a sectional view on the line 9—9 of Figure 8, showing the manner of assembling the two films in the reproducing apparatus.

Figure 10 is a detail view of one of the toothed wheels used in the reproducing apparatus.

Figure 11 is a detail view of portions of the picture film and sound film, together with a corresponding portion of the identification mark, printing film which is employed in connection with the two films when making the records.

Corresponding and like parts are referred to in the following description and indicated in all of the views of the drawings by the same reference characters.

In carrying out the present invention the picture record and sound record are made at the same time and by the same apparatus, but upon separate and distinct films. It has been previously proposed in this art to accomplish the result by making the picture record and the sound record upon the same film, although this is open to the objection that the proper emulsion, manipulation and development for obtaining the best results in the sound reproduction differ very materially from those required to obtain the best results for the picture records. Where the two records are made upon the same film, using the same emulsion, it must be obvious that a proper treatment or development of one record can only be obtained at the sacrifice of the other record, since the special form of development required to get the best results from the two records would ordinarily be quite different. It will thus be seen that there are very important practical reasons why the two records can not be successfully and satisfactorily made upon the same film, as has been previously proposed, and it is the object of the present invention to overcome this particular objection by providing a construction which admits of the records being made upon different films, which may have different emulsions, and may be individually treated in the development exactly as may be required to produce the best results. These two independent films have corresponding identification marks made upon the same at the time the two records are made, so that they can be assembled without difficulty in the proper manner necessary for a synchronous reproduction of the pictures and sounds.

Figure 1 illustrates in a diagrammatic manner a form of apparatus adapted to be employed in making the picture and sound records. The numeral 1 designates the casing which is provided at the top thereof with a chamber 1^a within which are mounted the reel 2 from which the sensitized films are unwound, and the reel 3 from which the opaque printing film is unwound, a similar chamber 1^b being provided at the bottom of the casing within which are mounted the reel 4 upon which the exposed films are wound and the reel 5 upon which the opaque printing film is wound. Suitable guide means 6 are provided at the top and bottom and intermediate points of the main portion of the casing 1 for holding the films and printing strip together during the record making operation. The numeral 7 designates the usual continuously rotating toothed roller and the numeral 8 the usual intermittently rotating toothed roller, the loop between the two rollers being indicated at 9. The conventional mechanism may be employed for operating these rollers and the picture taking mechanism, the portions of the films below the toothed roller 8 having an intermittent movement, while the portions of the films above the rollers 7 have a continuous movement.

The picture film 10 and sound film 11 are made separate and distinct from each other, and may be treated with the same emulsion, or with different emulsions, as found necessary to obtain the best results. The toothed rollers 7 and 8, one of which is shown in detail by Figure 7, are each provided with four peripheral rows of teeth 12. The picture film 10 engages one pair of rows of the teeth 12, while the sound film 11 engages the opposite pair of rows of

teeth 12, the two films being thus locked together and moved simultaneously through the machine. The printing strip 13 is arranged intermediate of the picture film 10 and sound film 11 and overlaps the adjacent inner edges of the two films, said printing strip being suitably perforated to engage the two inner rows of teeth 12 on the toothed rollers 7 and 8. This printing strip 13 is formed of opaque material, being provided at the edges thereof with transparencies 13ª in the form of identification marks. In the present instance numerals are employed, although any other suitable form of character might be substituted. These transparencies 13ª in the edges of the opaque strip 13 will, as hereinafter described, print corresponding identification marks 10ª and 11ª upon the picture film 10 and sound film 11, respectively. Inasmuch as the sound record must be made upon the continuously moving film above the loop 9, and the picture record upon the intermittently moving film below the loop 9, there will necessarily be a space between the corresponding transparencies 13ª on the opposite edges of the printing strip 13 in order that the portion of the sound record on the film 11 opposite an identification character 11ª may correspond to the picture opposite the same identification character 10ª on the picture strip. With the ordinary forms of moving picture machines, this interval would be ten spaces, so that similar transparencies 13ª on opposite sides of the printing strip 13 would be just ten spaces apart. Where numerals are employed, as in the present instance, there is a difference of ten units between those numerals directly opposed to each other on the printing strip, the numeral "7" being directly opposite the numeral "17", the numeral "8" directly opposite the numeral "18", *etc.*

The pictures are made in the usual manner through an aperture 14, a conventional form of lens 15ª being shown as arranged in front thereof. Immediately above the aperture 14 is an aperture 15 arranged over the edge of the printing strip 13 and formed in one end of a suitable housing 16. The rays from a lamp 17 arranged within the housing are focused by a lens 18 upon the edge portion of the printing strip 13 which moves opposite the aperture 15. The various transparencies 13ª upon that side of the printing strip 13 which overlaps the edge of the picture film 10 are thus successively printed upon the edge of the picture film as the pictures are taken and the film advanced.

At a point above the loop 9 the sound film 11 moves across an aperture 20 in one end of a housing 21. This aperture 20 is in the form of a transverse slit (see Figs. 4, 5 and 6) and a laterally elongated lens 22 is arranged within the housing to focus the rays from a sound controlled source of light 23 through the slit 20 upon the sound film 11. The shape of the lens 22 is such as to focus the light rays in a transverse line, instead of in a point, although the slotted aperture 20 is essential to prevent what is termed halation. The intensity of the light rays from the source of light 23, varies with the sound, so that as the sensitized film 11 is moved past the aperture 20 the intensity of the light acting thereon will be continually changing, the variance in intensity being controlled by the sound which is to be reproduced. This result may be produced in different manners, although I have shown the source of light 23 as in the form of an incandescent bulb having a long filament 23ª Figure 3 arranged parallel to the slit 20. The circuit 24 for the lamp 23 includes a source of electrical supply 25 and one coil 26 of an electro-magnetic coupler. Surrounding the coil 26 is another coil 27 Figure 3, arranged in the circuit 28 of a microphone or series of microphones 29, a suitable source of energy 30 being also arranged in the said circuit. In Figure 1, a series of the microphones 29, are shown as arranged in parallel and mounted at the back of the stage, the possible position of different actors in front of the microphone being indicated by the small circles 31. The sound waves will act through the microphone circuit 28, and owing to the relation of the coils 26 and 27 the intensity of the current in the light circuit 24 will be caused to fluctuate by induction.

Referring again to Figure 3 in the drawings, it will be seen how the force of the current flowing in the circuit 24, 28, 29, and 26 becomes superimposed upon the force of the current flowing in circuit 25, 24, 26 and 26 to oppose or assist the latter in its heating and illuminating of the filament 27.

Taking an induction coil in which the two independent circuits are wound about a common core as shown in the drawings, and where the current flowing in circuit 27, 28, 29 and 30 creates a constant number of lines of force under normal conditions, then any change in the number of these lines of force will induce a current in the circuit 24, 24, 25 and 26 according to the rule as laid down by Prof. S. P. Thompson, namely:—"A decrease in the lines of force, which pass through a circuit, produces in another circuit, enclosing the same lines of force, a current flowing in a positive direction (*i.e.* produces a direct current); while an increase in the number of lines of force which pass through the circuit produces (in the other circuit) a current in a negative direction."

Now, then, the alternate increase and decrease of current, as a result of sound acting upon the microphone, will increase and decrease alternately the number of lines of force flowing through both coils or circuits 24 and 27 and hence create in the circuit 26 an impulse of current that will assist or oppose the illuminating force of current from source 25 according as the current in 28 is an increasing or decreasing one, the current of 25 being in one direction. So long as there is no change in the current flowing in 28, which is the case when no sounds are acting upon the microphone, then the current in circuit 24, 26 and hence the illumination of the filament will be constant, the result of current from 25. Likewise the image photographed upon the moving film will be of uniform density

It is evident then that at any instant (for example when the current from the microphone is increasing) we may at will so arrange the direction of flow of the current from 25 that the current induced by it will assist or oppose it, and hence increase or decrease the illumination of the lamp at this particular instant and part of the sound wave.

That this particular point in the photo record must be, for reproduction by the selenium cell method, just the reverse in degree of transparency from what it should be if used for reproduction by the magnetic film method set forth in the Application No. 5447 of even date, should be apparent, if we consider that more light must strike the selenium cell to cause more current to act upon the receivers, while in the other case more lines of force must pass through the magnet coils and hence more iron be present to produce the same increase of current as results from transparency in the other case.

Inasmuch as the films used in reproducing must be a copy of the original which would result in what is known as a reversed or positive copy, it becomes necessary for us to have the density of the recorded images in the original film just opposite to what we require for reproduction, hence it will be seen that the original film for use in magnetic film reproduction might be used direct with a solenium cell to get what we would get with the iron copy in the other method.

As to the character of the sound waves, they are recorded in a manner distinctive of each characteristic. The higher the pitch, the larger the number of transverse lines representing the sound waves will be photographed per unit length of the film, The lower the pitch, the less will be this number of lines.

The more volume there is to the sound the more opaque will be the lines, owing to the higher intensity to which the sounds impinge upon the microphone, the consequent increase of pressure upon the carbon granules, the higher point to which in consequence the current is increased and the higher point to which the illuminating power of the filament will be raised. This will be the case where the record is to be used as a negative master record

from which copies are to be made for reproduction with a selenium cell. If, however, the copies are to be used for reproduction by the magnetic film method, then the pitch will be recorded in the same way by the number of lines per linear unit, but the volume will be represented by the extent to which the lines vary in transparency,—the more volume the more transparent, whereas in the other case the more opaque. That such is the case is likewise shown in the familiar experiment in which a manometric flame is made to vibrate by sound striking upon a diaphragm, and viewing the results as reflected by a revolving mirror. Here also it is found that the number of vibrations vary with the pitch, and the height of the flame with the volume of sounds.

Arranged immediately above the housing 21 is a housing 32 having an aperture 33 in one end thereof and provided with a lens 34 and light 35. The rays from the light 35 are focused by the lens 34 through the aperture 33 upon that side of the printing strip 13 which overlaps the edge of the sound film 11. As the films are advanced the transparencies 15' of that side of the printing strip are brought successively opposite the aperture 33 so that the characters will be printed upon the edge of the sound film 11. It will be observed that the two printing apertures 15 and 33, respectively, are arranged just one step in advance of the picture taking aperture 14 and the sound record aperture 20, respectively, so that the identification characters are really printed upon the edges of the films before the picture record and sound record, although the relationship between the two films is maintained, so that the result is the same as though the identification characters were printed at the same time the records were made.

The exposed films 10 and 11 are developed separately, and each film may be manipulated and treated in the manner necessary to perfect the same to the best advantage, the identification marks printed through the transparencies in the edges of the opaque printing strip 13 appearing at intervals along the edges of the films, thereby enabling the two films to be subsequently reassembled without difficulty in the proper relation necessary to bring about a synchronous reproduction of the pictures and sounds. The pictures appear upon the picture film in the usual and well known manner, while the sound record appears in the form of a series of transverse striations of varying intensity. The result is a film with a ladder-like strip of alternately dark and light zones merging into each other, as determined by the sound waves. From the original negatives positives for reproduction may be obtained in the usual manner by contact printing or otherwise.

One possible form of reproducing apparatus is shown by Figure 8. The main casing 36 is provided at the top thereof with a chamber 36^a to receive the reel 37 from which the films are unwound, and at the bottom thereof with a chamber 36^b to receive the reel 38 upon which the films are wound. The toothed roller 39 engages the films and rotates continuously, while the toothed roller 40 which is arranged below the roller 39 has an intermittent movement, said rollers being actuated by the usual mechanism. One of these rollers is shown in detail by Figure 10, and it will be observed that they have three peripheral rows of teeth 41. For reproducing purposes there is no occasion to use the printing strip 13, and the inner edges of the picture film 10 and sound film 11 are overlapped and caused to engage the intermediate row of teeth 41. At a point above the continuously rotating toothed roller 39 the sound film 11 is moved across a slit or aperture 42 through which rays of light from a lamp 43 are focused upon the film by suitable lenses 44. The light acts through the sound film 11 upon a selenium cell 43^1, or some similar member arranged in the circuit 44 of a telephone receiver 45, a source of electrical energy 46 being arranged in the circuit. The striations upon the developed sound film 11 are of various degrees of density, so that the intensity of the light acting upon the selenium cell 43^1 will vary inversely as the density of the sound record striations, the light acting strongly upon the selenium cell when

a comparatively transparent striation is brought opposite the slit 42, and acting very weakly upon the selenium cell when a denser striation is brought opposite the slit. The resistance of the selenium cell, as is well known, varies with the intensity of the light acting thereon, so that the current in the telephone receiver circuit will be caused to fluctuate, these fluctuations being determined by the sound record, with the result that the original sound is reproduced.

Below the continuously rotating toothed roller 39 the films move intermittently and the picture film 10 is moved across an aperture 47, the pictures being projected upon a screen 48 by rays from a suitable source of light 49 which are preferably focused by the lens 50 and 51. Suitable guide members 52 may be provided for cooperation with the rollers 39 and 40 to carry the films through the machine in the proper manner, and the mechanism for moving the films and projecting the pictures may be of the conventional construction.

After the films have been properly developed, and positives then produced from the negatives by contact printing or otherwise, the picture film 10 and sound film 11 are brought together and assembled for the reproducing apparatus. The corresponding identification characters 10^a and 11^a on the respective films indicate corresponding portions of the picture record and sound record, so that there is no difficulty in arranging the films for a synchronous reproduction of the pictures and sounds. The sound must be reproduced from the continuously moving film, while the pictures are reproduced from the intermittently moving film, so that the portion of the sound record corresponding to any particular picture must be several steps behind the picture as the film passes through the machine. Ordinarily, ten spaces would be about the proper amount, so that in assembling the two films the numeral "7" on the sound film would overlap the numeral "17" on the picture film, *etc.* This relation, however, can be varied, as may be required to bring about a synchronous reproduction of the sounds and pictures. The picture film 10 and sound film 11 may either be kept separate and distinct from each other, or the overlapping edges thereof may be cemented together so as to produce in effect a single film.

The sound record is made simultaneously with the picture record, and this may be accomplished either by photographic means, as in the present instance, or by any other suitable means, although the two records are made upon separate films or strips so that they are susceptible of having the necessary individual treatment necessary to the best results. When the sound record is made photographically, the arrangement is such that the sound controlled lamp is caused to give a larger variation of light for the louder sounds than for the weaker sounds. The sound record employed for reproducing purposes is made by contact printing from the master sound record film, and it will accordingly be obvious that in the reproducing sound record also the loud sounds are represented by striations having considerable variation in intensity, while the weak sounds are indicated by striations with smaller variation. The light thrown upon the selenium cell thus varies considerably for a strong sound, and varies less for a weak sound.

Any effect of the sound waves that causes a reduction of resistance in the lamp circuit is photographed and hence causes the image to increase in density. In other words, the density of the image upon the negative record varies directly as the pressure of the sound waves upon the microphone and inversely as the resistance of the microphone, which conditions can only be met by having the resistance of the microphone vary inversely as the current flowing in the lamp from whose light the image is impressed. The result is that as the sound waves alternately increase and decrease the pressure upon the microphone, there is an increase and decrease in the illuminating power of the lamp and the resulting record is a photographic image increasing and decreasing in intensity as the sound waves increase and decrease their effect upon the micro-

phone. In other words, this photographic record is not a succession of dark and light lines sharply defined but each sound wave is represented by a gradual rise and fall in intensity, blending together in one continuous whole. The extent of the rise and fall in intensity is directly proportional to the loudness of the sounds. In the reproducing record, printed from this negative, the same conditions will hold.

It is evident that to get a true reproduction we must have the resistance of the selenium cell vary exactly as the resistance of the microphone varies. The resultant effect upon the loud speaking 'phone will then be the same as it would be if the current came directly from the microphone.

This sound record, made upon a separate strip by photographic or other suitable means, bears identification characters produced upon the picture record, so that after the two records have been completed by the special individual handling or treatment necessary to the best results for each record, they may be assembled to produce a synchronous reproduction of the pictures and sounds.

Having now particularly described and ascertained the nature of my said invention and in what manner the same is to be performed, I declare that what I claim is:—

1. Talking picture apparatus including means for simultaneously making separate and independent adjustably related sound and picture records, in combination with means for simultaneously marking said separate records at all points throughout their length with a series of corresponding identification marks, to facilitate assembly for a synchronous reproduction.

2. In talking picture apparatus as claimed by Claim 1, means arranged between said records for placing a series of corresponding identification marks on the adjacent marginal edges of the two records throughout their length whereby said records may be matched at any and all points to facilitate assembly for a synchronous reproduction.

3. In talking picture apparatus as claimed by Claim 1, a marking element having separate oppositely located series of corresponding identification marks and means for simultaneously printing corresponding identification marks upon the two records to facilitate assembly for a synchronous reproduction.

4. Talking picture apparatus including a casing, means for simultaneously moving two independent films through the casing, means for making a picture record upon one of the films and a sound record upon the other film, and a printing member movable with the films and serving to place a series of corresponding identification marks upon the films to facilitate assembly for a synchronous reproduction.

5. In a talking picture apparatus as claimed by Claim 4, a printing strip movable with the films and overlapping the edges thereof.

6. Talking picture apparatus including a casing, means including toothed wheels for simultaneously moving two independent films through the casing, means for simultaneously making a picture record upon one of the films and a sound record upon the other film, an opaque printing strip overlapping the two films, perforations in said opaque printing strip for engagement with the beforementioned toothed rollers to move said strip through the casing with the films, the edges of the opaque printing strip overlapping the edges of the films and being provided with corresponding transparent identification marks, independent apertures under which the transparent marks upon the edges of the opaque printing strip are movable, and means for projecting light through the apertures to print the identification marks upon the edges of the films.

7. Talking picture apparatus including a casing, mechanism for moving two independent films through the casing, a portion of the movement being continuous while another portion thereof is intermittent, means for making a picture record upon the intermittently moving portion of one of the films, means for simultaneously making a sound record upon the continuously moving

portion of the other film, and means for simultaneously placing corresponding identification marks upon the continuously moving portion of one film and the intermittently moving portion of the other film so that corresponding portions of the picture and sound records can be readily identified.

8. In a talking picture apparatus as claimed in Claim 7, an opaque printing strip movable through the casing with the films and overlapping the same, said printing strip serving to place corresponding identification characters upon the two films so that corresponding portions of the sound record and picture record can be readily identified.

9. In a talking picture apparatus as claimed in Claim 8, providing the overlapping portions of the opaque printing strip with corresponding series of transparent identification characters, and means for projecting light upon the transparent identification characters for causing the same to be printed upon the films as the films and strip are moved through the casing.

10. In a talking picture apparatus as claimed by Claims 7, 8 and 9, arranging the corresponding characters of the two series at such an interval that one of them will be over the continuously moving film upon which the sound record is made while the other one is over the intermittently moving film upon which the picture record is made.

11. Talking picture apparatus including a casing, means for simultaneously moving two independent sensitized films through the casing a portion of the movement being intermittent while another portion of the movement is continuous, means for making a picture record upon the intermittently moving portion of one of the films, a slitted aperture being arranged opposite the continuously moving portion of the other film, a sound controlled light, means for focusing the rays from the light through the slitted aperture, an opaque printing strip movable through the casing with the films and overlapping the same, the overlapping portions of the opaque printing strip being provided with two series of corresponding transparent identification characters, and means for projecting light upon the printing strip for causing the transparent characters to be printed upon the two films

12. In a talking picture apparatus as claimed by Claim 11, a lens for focusing light through the aperture, an electric lamp for the lens, a circuit for the light, a microphone, a circuit for the microphone, the two circuits having an electro-magnetic coupling so that the intensity of the light is controlled by the sound.

Dated the 13th day of April, 1916.

KINGS PATENT AGENCY LIMITED,
By BENJ. T. KING,
Director,
Registered Patent Agent.
165, Queen Victoria Street, London, E.C.,
Agents for Applicant.

[This Drawing is a reproduction of the Original on a reduced scale.]

Fig. 1.

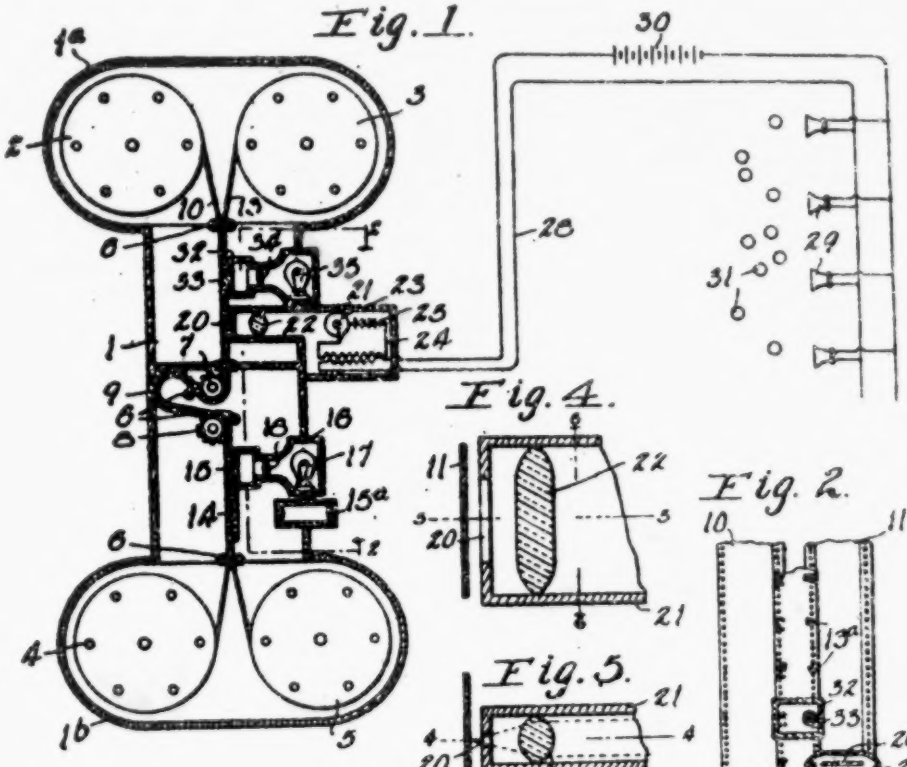

Fig. 4.

Fig. 2.

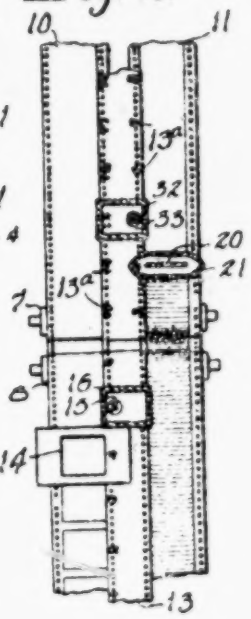

Fig. 5.

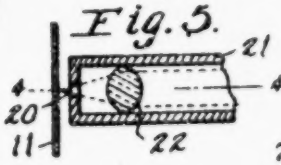

Fig. 3.

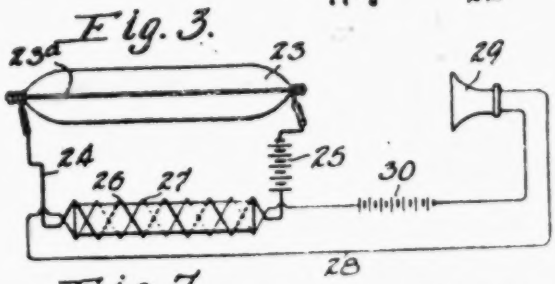

Fig. 7.

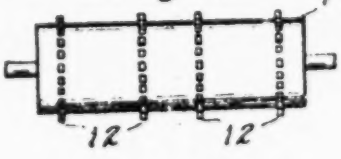

Fig. 6.

Fig. 8.

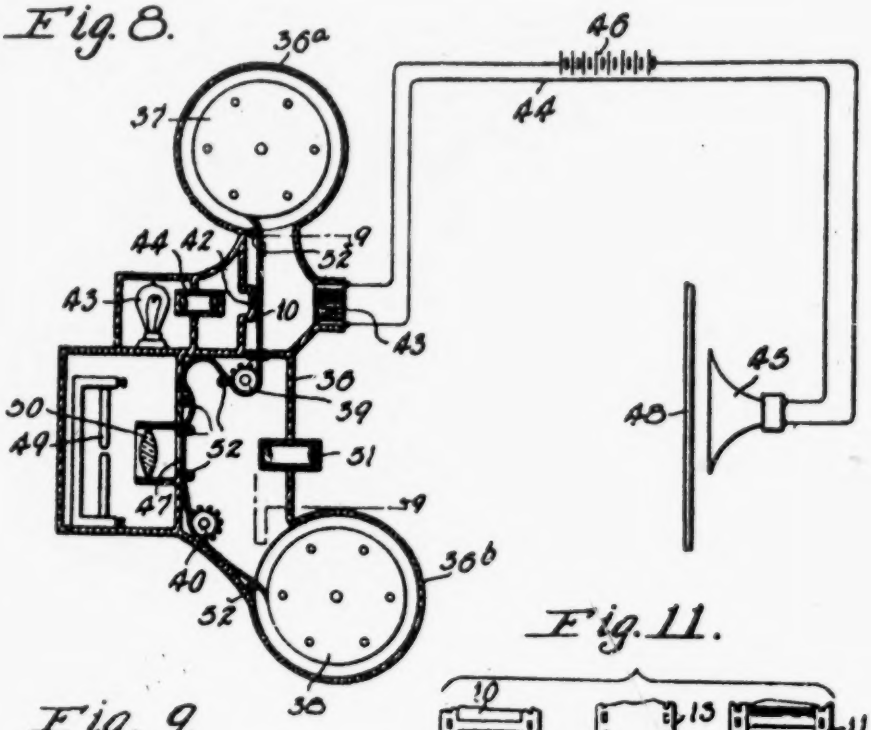

Fig. 9.

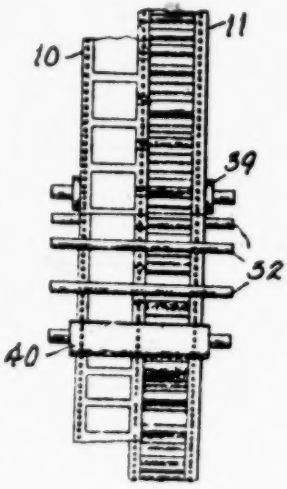

Fig. 11.

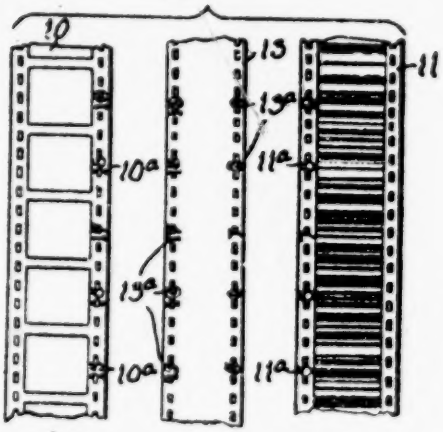

Fig. 10.

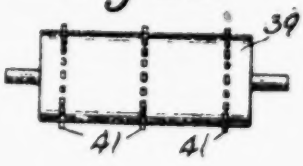

2464

Plaintiff's Exhibit No. 37.

Subject Inventions of Messrs. Engl, Massole and Vogt—F. A. Schroeder.

AMERICAN TELEPHONE AND TELEGRAPH COMPANY
BELL SYSTEM

Department of Development and Research
195 Broadway

New York Sept. 29, 1925

2465

Mr. F. A. Schroeder,
200 5th Avenue,
New York, N. Y.

Dear Sir:

Your letter of September 8, addressed to the American Telephone and Telegraph Company, regarding the inventions of Messrs. Engl, Massole and Vogt, has been referred to me for attention. If you will send us a complete description of the inventions in question, together with
2466 numbers or copies of the issued patents, covering same, the matter will be given careful and thorough consideration and you will be advised as to the value, if any, of the inventions to this company.

Yours truly,

L. F. MOREHOUSE,
Equipment Development Engineer.

FCB-MW

Plaintiff's Exhibit No. 37. 2467

September 8th, 1925.

American Telephone & Telegraph Company
195 Broadway
New York City.

Attention of the Managing Director.

Dear Sirs:

The object of the letter is to draw your attention to the inventions of Messrs Engl, Massole & Vogt owned by the Tri-Ergon Ltd, Zurich, Switzerland covering the field of Photo Electric 2468
Sound Recording and Reproducing; Acoustic film, Gramaphone, Radio Broadcasting Device and Loud Speaker as marked copy of American Cinematographer containing short outline.

Yours very truly,

TRI-ERGON, LTD.

Encl.

September 30th 1925.

Mr. L. F. Morehouse 2469
Dept of Development & Research
American Telephone and Telegraph Company
195 Broadway
New York City

Subject: Inventions of Messrs Engl et al

Dear Sir:—

Responding to your favor of 29th inst., we have instructed our attorneys Messrs. Ward, Crosby and Smith, 223 Broadway, to furnish you with the informations desired.

2470 *Plaintiff's Exhibit No. 37.*

Complete apparatus will arrive in this country within a short time, it will afford us great pleasure to have you then inspect same.

Yours very truly

TRI-ERGON, LTD.

October 1, 1925.

2471

American Telephone & Telegraph Co.,
195 Broadway,
New York, N. Y.

Attention of Mr. L. F. Morehouse,
Equipment Development Engineer.

Dear Sirs:

Mr. F. A. Schroeder of 200 Fifth Avenue has called our attention to your letter to him of
2472 September 29th referring to inventions on talking moving pictures, etc. of Messrs. Engl, Vogt and Massolle.

The Radio Corporation has expressed an interest in these inventions and information bearing on the same is now in their hands. We understand that they are acting on behalf of themselves, the G. E. and Westinghouse.

We understand that you are included in the cross-licensing agreements with these companies and presume that, therefore, you can readily obtain access to the records which we have placed in their hands. If we are mistaken as to

Plaintiff's Exhibit No. 37. 2473

this, however, and you would like to have information for your own company directly, please advise us.

I may say that the inventions in question include a number which are collateral to the talking moving inventions and which might be of interest to you, such as an improved microphone of the ionized air gap type, improved loud speaker inventions of the condenser telephone type, etc.

Kindly advise if we can be of any further service to you in the matter. 2474

Yours very truly,

DS.AM

Copy to Mr. Schroeder

Subject: Inventions of Messrs. Engl, Vogt and Massolle.

AMERICAN TELEPHONE AND TELEGRAPH COMPANY
BELL SYSTEM

Department of Development and Research 2475
195 Broadway

New York, October 10, 1925.
October 1—30896

Messrs. Ward, Crosby and Smith,
233 Broadway,
New York City.

Gentlemen:

This is in reply to your letter of October 1, relating to the inventions of Messrs. Engl, Vogt and Massolle.

2476 *Plaintiff's Exhibit No. 37.*

I was not aware until the receipt of your letter that the General Electric Company was investigating these inventions and had expressed an interest in them.

As the General Electric Company is not acting in our behalf, we should receive directly such information as we need for our investigation. This information should be a description of the inventions, together with the numbers or copies of such patents as have been issued concerning
2477 them, and such applications and other information relating to inventions not yet patented as your client feels free to disclose to us.

Yours very truly,

L. F. MOREHOUSE,
Equipment Development Engineer.

LFM-BMW.

October 14, 1925.

2478

American Telephone and Telegraph Company,
195 Broadway,
New York, N. Y.

Attention of Mr. L. F. Moorehouse, Equipm't Developm't Engr.

Re Inventions of Engl, Vogt and Massolle

Dear Sirs:

We have received your favor of October 10th saying that you would like to receive directly

Plaintiff's Exhibit No. 37. 2479

such information as you need for your investigation of these investigations.

We are ordering the necessary copies of patents, etc. and will send the same to you as soon as they arrive. These papers will comprise copies of the U. S. patents already issued, copies of certain pending U. S. applications and copies of foreign patents with translations corresponding to other pending U. S. applications and also a short description of the system showing the positions of the various inventions in the system.

It will probably be about a week before this data is at hand when we will forward it to you. 2480

Yours very truly,

DS.AM

Copies to Mr. Schroeder,
Mr. Schwenterley,
Tri-Ergon.

October 29, 1925.

2481

American Telephone & Telegraph Co.,
195 Broadway,
New York, N. Y.

Attention of Mr. L. F. Moorehouse, Equipm't Developm't Engr.

Re Tri-Ergon, A.-G., (Engle, Vogt and Massolle) Inventors

Dear Sirs:

In further answer to your favor of October 10th and referring to our letter of October 14th, we now have the data in hand to give you the

2482 *Plaintiff's Exhibit No. 37.*

information in regard to our clients' system and inventions. We believe these papers will be sufficient for you to get a preliminary knowledge of the Tri-Ergon U. S. cases.

We enclose copies of the U. S. patents which have issued to date and also German patents with translations and British patents, which correspond more or less to various U. S. applications which are still pending. We will, of course, show you the U. S. files themselves later, if the matter develops in a sufficiently satisfactory manner.

2483

We hand you herewith:

1. Copy of a memo sketching the situation.

2. U. S. issued patent 1,534,148 covering pick-up or microphone, which is termed the "Kathodophone". There are several additional applications covering details of construction, etc. which we probably can show you later.

3. Copies of U. S. patents 1,557,678, Engl, *et al.*, and 1,558,032, Massolle, *et al.*, both dated October 20, 1925, covering the resistance coupling hook-up and high frequency transformer hook-up for the system.

2484

4. German patents 368,367, 368,368 and 368,-369 with translations corresponding to our pending application which is now in interference with DeForest patent 1,482,119, covering the glow light discharge recording system.

4a. German patent 369,075 with translation corresponding to pending U. S. case on detail

Plaintiff's Exhibit No. 37. 2485

of the glow light discharge tube, but not describing and illustrating same very completely.

5. German patents 387,058, 389,317, 389,318 and 389,319 with translations corresponding to pending U. S. case on mechanical features of *the film feed, etc.*

5a. German patent 368,383 with translation corresponding to U. S. application on making sound and picture negatives separately, developing separately and then printing on the same film. We are trying to obtain an interference with a DeForest patent on this, our application being earlier than his date. 2486

6. U. S. issued patent 1,512,681 covering process of making the positive films from the negative sound record films, to effect certain corrections.

7. U. S. issued patent 1,550,381, Aug. 18, 1925, on one form of the condenser telephone loud speaker. We have three pending applications covering other forms of this device, having different methods of avoiding resonance troubles by distributing the natural rates of vibration widely throughout the acoustic range, some of these being particularly adapted for radio loud speakers without horns. 2487

8. British patent 157,433 somewhat corresponding to a pending U. S. case on the use of the photo-electric cell, etc.

9. British patent 157,434, covering combination of photo-electric cell with condenser telephone loud speaker, etc. corresponding to a pending U. S. application.

2488 *Plaintiff's Exhibit No. 37.*

MISCELLANEOUS FEATURES

10. German patent 369,074 with translation. This corresponds partially, with incomplete illustration, to a pending U. S. application on amplifier tube with multiple step amplification with a single cathode.

11. German patent 350,506 with translation corresponding to pending U. S. case on differential h. f. circuits controlled by photo-electric cell.

2489

12. German patent 353,644 with translation corresponding to U. S. case on h. f. circuits. I note the U. S. Examiner considers the last two cases as quite broadly new.

13. German patent 350,586 with translation, corresponding to pending U. S. case covering an amplifier tube with an anode screening electrode with a higher potential than the working anode.

2490

14. German patent 350,999 with translation corresponding incompletely to pending U. S. case covering hook-up with positive bias on grids.

15. Copy of our patent No. 1,555,301, dated Sept. 29, 1925, on parallel connection of glow light discharge tube with amplifier.

16. German patents 350,705 and 350,706 with translations partly corresponding to pending U. S. case and describing sound recording system of the vibrating mirror type.

Plaintiff's Exhibit No. 37. 2491

17. British patent 177,534 corresponding to pending U. S. case covering a phosphorescent screen method of sound recording.

18. German patent 392,188 with translation corresponding to U. S. pending application covering sound recording system in which cathode rays pass out from a cathode tube and act directly upon the moving film to make a photographic record corresponding to the sound.

19. German patent 350,709 with translation corresponding to a pending U. S. case covering the idea of having the kind of light, the kind of photo-cell and the kind of emulsion on the film all correspond in sound reproducing. 2492

20. U. S. patent No. 1,555,281 dated Sept. 29, 1925 covering method of making gramophone disc records involving the use of the ionized air gap pick-up and other features.

21. Two pending applications A-19a and A-19b cover improvements in regard to the method of directing the light rays through a slit before they fall upon the film in both recording and reproducing, and also covering improvements in the light source for reproducing. In DeForest the film passes immediately behind the metal piece in which the slit is formed so that this slit picks up rust, etc. and causes imperfections in the recording and reproducing. This is entirely overcome by our method and I can give you details later. 2493

22. U. S. Case A-41, I have no corresponding foreign patent at hand but can let you have this application later. It covers arrangements for

2494 *Plaintiff's Exhibit No. 37.*

overcoming the difficulty caused by the negative voltage curve of the glow discharge tube in combination with the amplifier and also covers various details and combinations in connection with the glow discharge tube recording device and the amplifying tubes, etc.

Quite a number of the pending applications referred to above have been allowed and various others are almost completely allowed. The pending U. S. cases describe, illustrate and claim
2495 the inventions much more fully in most cases than the corresponding foreign patents.

Yours very truly,

DS.AM
encls.

WARD, CROSBY & SMITH.
233 Broadway,
New York

10/29/25

2496 MEMO RE TRI-ERGON CONSTRUCTIONS

1. In recording sound we use a construction covered by our Patent 1,534,148, April 21, 1925, known as the Kathodophone. This enables the sound to acoustically modulate the current in a circuit without mechanically moving any parts whatever and in a manner which quite avoids inertia by causing the sound vibrations to travel directly into an ionized air gap extending between an anode and a cathode, the latter being preferably heated by a separate battery.

Plaintiff's Exhibit No. 37. 2497

We also have applications pending on details of this construction.

The acoustically modulated current is amplified and feeds glow discharge tube of the character of the Gehreke tubes. The cathode glow produced in this tube is varied in intensity of illumination by the acoustically modulated current and this light of varying intensity passes through a slit on to the moving film and thus makes a sound record in the form of transverse lines of varying density.

2498

Our main application on this glow discharge tube recording is involved in interference with DeForest Patent 1,482,119. This interference has not yet reached the stage of taking testimony and will take quite a time before final decision, probably. Our chances of success seem excellent for various reasons, among them being that we have a filing date abroad considerably earlier than DeForest here and it is exceedingly doubtful that DeForest made any actual reduction to practice before our filing date. His construction as shown and described is not commercial and does not show any clear understanding of the matter, and we believe it to be inoperative, as described.

2499

We also have pending applications covering various useful details of this construction with allowable claims. The amplifier tubes are connected by resistance couplings, as well as are other elements of the system in order to prevent the recording and reproducing being affected by extraneous sounds such as those produced by the adjacent moving picture apparatus motor, etc., and we have two patents directed

2500 *Plaintiff's Exhibit No. 37.*

to this idea which have been issued, Nos. 1,557,-678 and 1,558,032.

A difficulty of the DeForest apparatus consists in the fact that the film moves in contact with the plate in which a fine slit is arranged through which the light passes and this slit picks up dust, etc. We have pending applications covering a slit arrangement which is a great improvement over the prior art, containing presumably allowable claims. By this ar-
2501 rangement all of the acoustic frequencies may be recorded clearly on the film without overlapping. We can give details of this construction when needed.

The negative sound record having been made on the film, certain inaccuracies are apt to arise in the developing and printing of the positive film therefrom. These inaccuracies in the photographic process are overcome in the method described in our Patent 1,512,681, October 21, 1924, which involves an overdevelopment of the negative and a corresponding correction in the
2502 printing, as a result of which the density of the print will correspond more accurately to the variations of the illuminating intensity of the recording light.

In reproducing, light from a constant source passes through a positive film and falls on a photoelectric cell of an alkali cathode type and produces modulated current which is amplified and affects a condenser telephone type of loud speaker which does not require any horn. We have various applications on combinations of the photoelectric cell with various other elements of the system, these being thought to be

2503

patentably novel when applied to a sound reproducing system a number of years ago, when the first applications were filed.

The condenser telephone loud speaker is covered by various applications, one of which is now issued, Patent 1,550,381. These cover methods for doing away with the improper reinforcement of various tones by resonance. This is accomplished by constructions such that the diaphragm will have no natural frequency as a whole, various frequencies being reinforced throughout the acoustic range and a proper damping factor being provided to flatten the resonance peaks thus produced so as to produce a sound curve substantially parallel to that of a diaphragm having no resonance points at all within the acoustic range.

2504

The Company has quite a number of U. S. applications pending, over thirty as I remember, covering various features used and also covering various structures and methods which are not actually used commercially by us, quite a number being allowed.

2505

We also have a patent No. 1,555,281, dated Sept. 29, 1925, on a method of making sound record discs or phonograph records in a manner free from inertia which involves some of the principles covered by some of the patents and applications above referred to.

We also have applications pending specifically covering loud speaker construction particularly for radio uses which is of the condenser telephone type, with no natural frequencies or resonance points.

WARD, CROSBY & SMITH.

2506 *Plaintiff's Exhibit No. 37.*

Subject: Inventions of Engl, Vogt and Massolle

AMERICAN TELEPHONE AND TELEGRAPH COMPANY
BELL SYSTEM

Department of Development and Research
195 Broadway

New York, November 5, 1925
October 29—31482

2507 Messrs. Ward, Crosby and Smith,
233 Broadway,
New York, N. Y.

Dear Sirs:

I have your letter of October 29 with the enclosures listed therein relating to certain inventions of Messrs. Engl, Vogt and Massolle which we shall be glad to investigate with a view to determining what interest, if any, this company may have in them. I note that items 21 and 22
2508 in your letter relate to pending applications which you do not include with the enclosures but regarding which you will supply details later. As soon as our investigation in connection with this matter is completed, I shall be glad to advise you as to our conclusions.

Yours truly,

L. F. MOREHOUSE,
Equipment Development Engineer.

CSD:EML

Plaintiff's Exhibit No. 37. 2509

April 28, 1926.

American Telephone & Telegraph Co.,
195 Broadway,
New York, N. Y.

Attention of Mr. L. F. Moorehouse,
Equipment Development Engr.

Re Tri-Ergon, A.-G., U. S. Patent Cases

Dear Sirs:

Referring to our letter of October 29th last 2510
enclosing description of the various inventions owned by Tri-Ergon, will you please advise us whether the American Telephone & Telegraph Co. has come to any decision in regard to being interested in these inventions or any of the same.

Yours very truly,

DS:AM

Subject: Inventions of Engl, Vogt and Massolle.

AMERICAN TELEPHONE AND TELEGRAPH COMPANY 2511
BELL SYSTEM

Department of Development and Research
195 Broadway

New York, May 3, 1926.
April 28-1926—35179.

Messrs. Ward, Crosby and Smith,
233 Broadway,
New York, N. Y.

Gentlemen:

This is in reply to your letter of April 28, concerning certain inventions of Messrs. Engl,

2512 *Plaintiff's Exhibit No. 37.*

Vogt and Massolle, which we are investigating with a view to determining what interest, if any, this company may have in them. In investigating matters of this kind it is often necessary for several departments of the company to consider each invention carefully and, in view of the number of items involved in this instance, we have not yet finished our study. This work is proceeding as rapidly as practicable, however, and you will be advised as to our conclu-
2513 sions in the near future.

Yours truly,

L. F. MOREHOUSE,
R. W. M.
Equipment Development Engineer.

CSD:MM

June 30, 1926.

2514
American Telephone and Telegraph Co.,
195 Broadway,
New York, N. Y.

Attention of Mr. L. F. Morehouse, Equipment Development Engineer.

Re Patents—Engl. Vogt and Massolle

Dear Sirs:

Pursuant to our letter of yesterday another patent of the above inventors, namely No. 1,590,-

Plaintiff's Exhibit No. 37. 2515

185, has now come to hand and same will be forwarded to you as soon as copy comes in.

Yours very truly,

DS:AM

Copy to Mr. Schroeder.

July 8, 1926.

American Telephone and Telegraph Co., 2516
195 Broadway,
New York, N. Y.

Attention of Mr. L. F. Morehouse, Equipment Development Engineer.

Re Patents—Engl. Vogt and Massolle

Dear Sirs:

Referring to our letter of June 30th, patent No. 1,590,185, Engl. *et al.*, has now come to hand and we enclose it herewith. 2517

Yours very truly,

DS:AM
encl.

Copy to Mr. Schroeder

2518 *Plaintiff's Exhibit No. 37.*

July 29, 1926.

American Telephone & Telegraph Co.,
195 Broadway,
New York, N. Y.

Attention of Mr. L. F. Morehouse, Equipment Development Engineer.

Re Inventions of Engl. Vogt and Massolle

2519 Dear Sirs:

Your letter of July 15th received.

This is to enquire when you expect to complete your investigation of this matter if it has not yet been completed. We would be glad to hear definitely from you whether you are interested in this proposition.

Yours very truly,

DS:AM

2520 Copy to Mr. Schroeder

Plaintiff's Exhibit No. 37. 2521

Subject: Inventions of Engl, Vogt and Massolle.

AMERICAN TELEPHONE AND TELEGRAPH COMPANY
BELL SYSTEM

Department of Development and Research
195 Broadway

New York, Aug. 4, 1926
7/29/26—37232.

Messrs. Ward, Crosby and Smith, 2522
Woolworth Building,
233 Broadway,
New York, N. Y.

Gentlemen:

This is to acknowledge receipt of your letter of July 29, in which you inquire as to when we may expect to complete our investigation concerning the Engl, Vogt and Massolle inventions. Our work in this connection is going forward as rapidly as practicable and it now seems 2523
likely that it will be completed in about five or six weeks, when we shall be glad to advise you concerning our conclusions.

Yours very truly,

L. F. MOREHOUSE,
Equipment Development Engineer.
C.S.D.

CSD:ML
MLM

PLAINTIFF'S EXHIBIT No. 38

Announce New "Talking Pictures"

By G. Pupikofer

Acoustic Triergon Film Given Extensive Trials *for* Testing *on* Continent

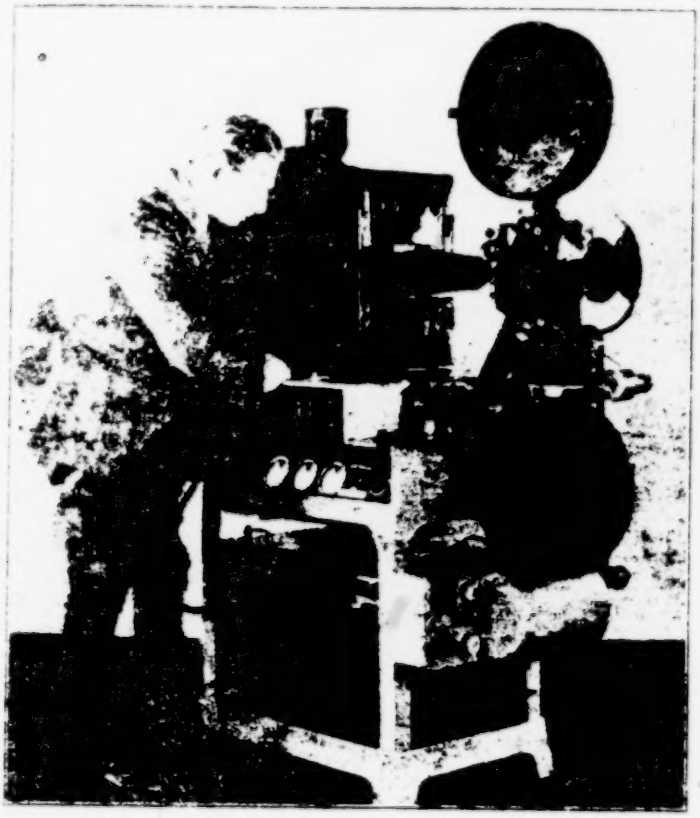

Left—Picture A, illustrating the projector for the new "talking pictures."

Above—Picture B, the auxiliary loud speaker, which is placed near or behind the projection screen, and produces the sound that gives the audience the illusion of the talking and musical film.

5800
United States District Court
Eastern District of New York,
04 Exhibit 38 in evidence
Date Dec 5/31
Clerk
Deputy Clerk

It is well known that for many years attempts have been made to solve the problem of the acoustic film by the aid of the gramophone. These efforts, however, did not yield any satisfactory result, in spite of the fact that no less a person than Mr. Edison occupied himself with the matter. Apart from the defective reproduction of speech and music by the gramophone, the temporal concordance of picture and sound, i. e., the synchronism, was not obtained. Very often, the artist on the screen had already closed his lips before the last tones were audible from the gramophone horn.

The Triergon system does away with the gramophone. The cinematographic picture and the phonogram here form an organic unit, both being photographed on the same reel. At the outset there were considerable technical difficulties experienced in carrying out the Triergon system, seeing that it was intended to transform the feeble energy of the sound-waves into electrical impulses. These electrical impulses had to be transformed into light for the purpose of photographing them on the reel. The latter is then developed and copied, and the acoustic film is reproduced. An analogous proceeding had to be carried out in the reverse direction, i. e., light had to be converted into electricity and the latter into sound, so that the same tones issue as are heard by the human ear when making the record.

The acoustic Triergon Film, popularly known as the "talking film" is the result of seven years' work on the part of three inventors, J. Masselle, H. Vogt and Dr. J. Engl. The Tri-Ergon Co., Ltd., Zurich, a Swiss Company with a paid-up capital of two million Swiss francs, is the owner of the invention with all the patents appertaining thereto. The company manufactures and supplies all the necessary apparatus. The acoustic films themselves are made by the licencees of the company and utilized under license. The Universum Film Co., Ltd., Berlin (Ufa) recently acquired the license for German-speaking countries. The Tri-Ergon

(Continued on Page 17)

New "*Talking Pictures*"

(Continued from Page 31)

Co. have retained all rights for other countries, and is represented in New York by F. A. Schroeder.

Although the older arts of telephony and photography had already given birth to a number of valuable apparatus, such as microphones, electric amplifiers, loud speakers, etc., it was gradually found that the existing apparatus were insufficient for the talking film. Hence a large number of special technical problems had to be solved anew. Large sums of money, considerable inventive and technical skill and valuable time were expended with this object.

Before treating this path of development more closely I should like in this place to mention some of the practical commercial results of the Triergon system, as they throw more light on the degree of perfection attained by this system than any technical explanations can do. In order to demonstrate the technical reliability of the apparatus, their convenience when traveling, the quality of their representations and their power of attracting the public, a tour was organized last winter in the Rhineland at the request of several parties. The apparatus No. 18 traveled with a film program of 2000 meters the towns of Cologne, Dusseldorf, Duisberg, Herne, Aachen, Solingen, Bonn, Munich, Rheydt, Oberhausen, Krafeld, etc. These exhibitions continued from November 7th to February 19th, and the results before the

(Continued on Page 18) 35½

thousands who came to see them confirmed the inventors' faith in the apparatus.

First of all a new and properly working microphone had to be created for making the sound record, the so-called "Kathodophone." While microphones heretofore have made their records by mechanical means, such as membranes, carbon granules, etc., the kathodophone obtains perfectly pure sounds the inventors claim. The kathodophone works on an entirely new principle by which the sound exercises a direct influence on the electric current, being conveyed to an iron path which is switched into the electric circuit. As this new kind of microphone does not possess any mechanically moved parts the disturbing self-frequencies which can hardly be avoided in the case of ordinary microphones are eliminated.

The second special task was the creation of an electrical amplifier of the same quality as the kathodophone. The difficulty of this task can be gauged by the fact that all the various sound frequencies had to be amplified a hundred thousand fold, whereas, as is known, the human ear needs between 5,000 and 20,000 frequencies a second.

The third stage in the development of the new film was the production of the so-called "ultra-frequency lamp," a recording lamp sensitive to sound, which transforms the vibrating electric current in the rhythm of the arriving sound-waves into a trembling luminous patch which illuminates the film. The usual sources of light, such as incandescent and arc lamps were found not adaptable for this purpose.

After this preliminary work the production of the picture-sound film record could be proceeded with, i. e., to capture all the sounds and tones simultaneously with the picture being screened. The development of the negatives, too, as well as the copying of the positives, or copies required special study.

Fig. A shows the Tri-Ergon projection apparatus for talking films. The apparatus possesses a contrivance similar to that which has long been used by astro-physicists for determining starriness. This photo cell is distinguished by the fact that it immediately reacts on every light impression with an electric impulse. In addition the projection apparatus has a graded amplifier which may be seen in Fig. A.

The perforation of the acoustic reel is the one universally used, so that the apparatus can also project ordinary films. This has a certain advantage when projecting both kinds of film, i. e., "dumb" and "talking" ones, at the same performance. The Tri-Ergon process is advocated as offering without further ado the possibility of providing any film with suitable accompanying music and thus replacing the expensive kinema orchestras. Instructive films and the like can also be accomplished by the necessary elucidations in any language. It goes without saying, too, that very interesting possibilities are thus opened out to advertising.

Fig. B shows the novel hornless loud speaker, the "Statophone," which is placed near or behind the [illegible]

Co. have retained all rights for other countries, and is represented in New York by F. A. Schroeder.

Although the older arts of telephony and photography had already given birth to a number of valuable apparatus, such as microphones, electric amplifiers, loud speakers, etc., it was gradually found that the existing apparatus were insufficient for the talking film. Hence a large number of special technical problems had to be solved anew. Large sums of money, considerable inventive and technical skill and valuable time were expended with this object.

Before treating this path of development more closely I should like in this place to mention some of the practical commercial results of the Triergon system, as they throw more light on the degree of perfection attained by this system than any technical explanations can do. In order to demonstrate the technical reliability of the apparatus, their convenience when traveling, the quality of their representations and their power of attracting the public, a tour was organized last winter in the Rhineland at the request of several parties. The apparatus No. 18 traveled with a film program of 2000 meters the towns of Cologne, Dusseldorf, Duisberg, Herne, Aachen, Solingen, Bonn, Munich, Rheydt, Oberhausen, Krafeld, etc. These exhibitions continued from November 7th to February 19th, and the results before the

(Continued on Page 18)

thousands who came to see them confirmed the inventors' faith in the apparatus.

First of all a new and properly working microphone had to be created for making the sound record, the so-called "Kathodophone." While microphones heretofore have made their records by mechanical means, such as membranes, carbon grabules, etc., the kathodophone obtains perfectly pure sounds the inventors claim. The kathodophone works on an entirely new principle by which the sound exercises a direct influence on the electric current, being conveyed to an iron path which is switched into the electric circuit. As this new kind of microphone does not possess any mechanically moved parts the disturbing self-frequencies which can hardly be avoided in the case of ordinary microphones are eliminated.

The second special task was the creation of an electrical amplifier of the same quality as the kathodophone. The difficulty of this task can be gauged by the fact that all the various sound frequencies had to be amplified a hundred thousand fold, whereas, as is known, the human ear needs between 5,000 and 20,000 frequencies a second.

The third stage in the development of the new film was the production of the so-called "ultra-frequency lamp," a recording lamp sensitive to sound, which transforms the vibrating electric current in the rhythm of the arriving sound-waves into a trembling luminous patch which illuminates the film. The usual sources of light, such as incandescent and arc-lamps, were found not adaptable for this purpose.

After this preliminary work the production of the picture-sound film record could be proceeded with, i. e., to capture all the sounds and tones simultaneously with the picture being screened. The development of the negatives, too, as well as the copying of the positives, or copies required special study.

Fig. A shows the Tri-Ergon projection apparatus for talking films. The apparatus possesses a contrivance similar to that which has long been used by astro-physicists for determining starriness. This photo cell is distinguished by the fact that it immediately reacts on every light impression with an electric impulse. In addition the projection apparatus has a graded amplifier which may be seen in Fig. A.

The perforation of the acoustic reel is the one universally used, so that the apparatus can also project ordinary films. This has a certain advantage when projecting both kinds of film, i. e., "dumb" and "talking" ones, at the same performance. The Tri-Ergon process is advocated as offering without further ado the possibility of providing any film with suitable accompanying music and thus replacing the expensive kinema orchestras. Instructive films and the like can also be accomplished by the necessary elucidations in any language. It goes without saying, too, that very interesting possibilities are thus opened out to advertising.

Fig. B shows the novel hornless loud speaker, the "Statophone," which is placed near or behind the projection screen, and produces the sound that gives the audience the illusion of the talking and musical film. It is hardly necessary to point out that this new loud speaker is of considerable importance to acoustics, especially as a broadcasting loud speaker.

CLERK'S COPY.

Vol. III

TRANSCRIPT OF RECORD

Supreme Court of the United States

OCTOBER TERM, 1934

No. 254

PARAMOUNT PUBLIX CORPORATION,
PETITIONER,

vs.

AMERICAN TRI-ERGON CORPORATION

ON WRIT OF CERTIORARI TO THE UNITED STATES CIRCUIT COURT OF APPEALS FOR THE SECOND CIRCUIT

PETITION FOR CERTIORARI FILED AUGUST 6, 1934.

CERTIORARI GRANTED NOVEMBER 5, 1934.

INDEX.

PAGE

Bill of Complaint 1
Answer 10
Order dated November 18, 1932, Amending Answer 16
Order dated November 23, 1932, Amending Answer 17
Narrative and Condensed Statement of the Testimony 18
Stipulation and Order Approving Condensed Statement of the Testimony 466

PLAINTIFF'S WITNESSES.

Louis B. Hoffman:
Direct 30
Cross 43
Recalled:
Cross 124

William C. Ballard, Jr.:
Direct 51
Cross 69
Re-direct 95
Re-cross 101

John M. Joy:
Direct 104
Cross 110
Re-direct 123

DEFENDANT'S WITNESSES.

Henry Nonnenbacher:
Direct 128
Cross 133

PAGE

Lloyd A. Jones:
Direct 134
Cross 194
Re-direct 302
Recalled:
Direct 340
Cross 341
Recalled:
Direct 386
Cross 386

Edward C. Wente:
Direct 307
Recalled:
Direct 343
Cross 344
Re-direct 375
Re-cross 379

Whitford Drake:
Direct 327
Cross 331
Re-direct 339
Re-cross 339

PLAINTIFF'S REBUTTAL WITNESSES.

William C. Ballard, Jr.:
Direct 389
Resumed:
Direct 433
Cross 447
Re-direct 454

Courtland Smith:
Direct 410
Cross 427
Re-direct 432

PLAINTIFF'S EXHIBITS.

	Offd. Page	Ptd. Page
1—Vogt patent No. 1,825,598 in suit	18	467
2—Certified copy of disclaimer with respect to Claims 6 and 7 of the patent in suit	19	472
3—Certified copy of File Wrapper and contents of application for patent in suit	19	475
4—Certified copy of decision of Examiners of Interferences in the Interference No. 53,103	19	567
4-A—Certified copy of decision of the Board of Appeals, Patent Office, in same interference	19	571
5—DeForest patent involved in said interference, No. 1,489,314	20	876
6—Original German application as filed, corresponding to the application for patent in suit; being German application V16,431 VI-57,a2	20	578
Translation		581
7—Certified copy of assignment from Vogt, *et al.*, inventors of the patent in suit, to Tri-Ergon, Ltd., dated June 3, 1924	20	
8—Photostatic copy of agreement between Tri-Ergon, A.G. and Wm. Fox, dated September 4, 1928	20	
9—Photostat copy of agreement between Tri-Ergon, A.G. and Tri-Ergon Musik, dated November 8 and 15, 1926, and translation thereof	20	

	Offd. Page	Ptd. Page
10—Certified copy of an assignment from Tri-Ergon, A.G. to William Fox of certain patents, including the patent in suit	20	
11—Photostat copy of an assignment from Wm. Fox to American Tri-Ergon Corporation, of certain patents, including patent in suit	21	
12—Two combined statements (of Defendant's process) and stipulations, dated respectively November 17 and 26, 1932	21	
12-A—Strips of Defendant's film accompanying first statement	30	
13—Photostat copy of densitometer readings shown on sheet entitled "Density readings of sensitometered strips", referred to by witness Hoffmann	37	584
14—Photostat copy of gamma curve referred to by witness Hoffmann	37	585
15—Photostat copy of opacity curve referred to by witness Hoffmann	37	586
16—Work sheet from which Mr. Hoffmann figured out the reduced percentages of ingredients for two developers which he referred to ..	37	587
17—Picture strip referred to by witness Hoffmann as being developed in defendant's picture developer	38	
18—Piece of negative referred to by witness Hoffmann as developed in defendant's sound developer	38	
19—Two pictures on one sheet, lower one printed from Exhibit 18, upper one printed from Exhibit 17	39	

	Offd. Page	Ptd. Page
20—Strip of test film from which Mr. Hoffmann took the readings on Exhibit 13, readings marked sound developer	42	
21—Strip from which Mr. Hoffmann got data shown on Exhibit 13, marked picture developer	43	
22—Chart illustrating defendant's process	53	589
23—Second chart illustrating part of defendant's process	53	589
24—Photostatic copy of chart illustrating sound recording	56	590
25—Reis patent No. 1,473,976	62	591
26—French patent No. 448,757	62	924
27—British patent No. 157,433 of 1922 to Vogt	62	601
28—File wrapper of Dr. Wente's application	375	604
References cited in Wente application file	375	
28-A—Holst, No. 1,205,632		645
28-B—Tessler, No. 1,205,582		655
28-C—Hochstetter, No. 1,325,198		664
28-D—Jobke, No. 1,344,896		673
28-E—Tigerstedt, British, No. 100,748, 1919		679
28-F—Brown, *et al.*, No. 1,034,192		683
28-G—Ulysse, No. 1,161,910		690
28-H—Dyer, *et al.*, No. 970,614		696
Greensfelder, No. 1,254,684 (Def. Ex. G)		701
Vogt, *et al.*, British No. 178,442 (Def. Ex. N)		994
Bullis, No. 1,335,651 (Def. Ex. G)		714

	Offd. Page	Ptd. Page
29—Patent taken out by Mr. T. J. Engel and assigned to Western Electric Company, No. 1,654,926, issued January 3, 1928, on an application filed October 2, 1923 ...	375	722
30—Bullis patent No. 1,679,708	437	725
31—Craig patent No. 1,260,338	443	728
32—Certified copy of Vogt *et al.* German application as filed, No. V-14634, IX, 57a-2, filed April 2, 1919	455	738
Translation		744
33—Certified copy of File Wrapper and contents of Vogt *et al.*, now abandoned, U. S. application Serial No. 458,636, filed April 4, 1921	455	748
34—Certified copy of decision of State Superior Court, one of Berlin, in the case of Tonbild vs. Klangfilm, recording Vogt *et al.*, German patent No. 368,383	458	775
Translation		785
35—Photostat of article of H. B. Marvin, of the General Electric Co. in Transactions of S. M. P. E. for April, 1928, referred to in said German court decision	458	795
36—Photostatic copy of British patent to Bullis, No. 105,589, referred to in said decision	458	812
37—Series of letters between Mr. Schroeder and the American Telephone & Telegraph Company ...	459	822
38—Article in American Cinematographer as sent by the Schroeder letter of September 8, 1925, to American Telephone & Telegraph Company	459	842

Defendant's Exhibits.

	Offd. Page	Ptd. Page
A—Sections of the two original negatives of "The Music Master" released by Biograph Co., May 6, 1908 (Physical)	129	
B—Descriptive circular, dated May 6, 1908, for "The Music Master" sent to Biograph distributors ...	130	844
C—Composite positive print from the two negatives of Exhibit A (Physical)	132	
D—Four photomicrographs of 8000 cycle note on positive and negative emulsions developed in defendant's picture and sound formulae	157	
E—Two positive enlargements printed from the same strip of negative film and developed in defendant's picture and sound formulae	158	
F—Chart showing frequency characteristics of positive and negative emulsions	160	845
G—Binder entitled "Defendant's Book of Prior Patents"	169	

United States Patents.

Patentee		
Bendann *et al.*	No. 125,522 ..	846
Jenkins,	No. 606,993 ..	849
Walker,	No. 1,186,717 ..	852
Greensfelder,	No. 1,254,684 ..	701
Craig,	No. 1,260,337 ..	861
Messter,	No. 1,286,383 ..	873
Bullis,	No. 1,335,651 ..	714
DeForest,	No. 1,489,314 ..	876

BRITISH PATENTS.

		Offd. Page	Ptd. Page
Rossi,	No. 21,467, 1909		879
Rosenberg,	No. 23,620, 1911		883
Downing,	No. 6,727, 1913		896
Kindermann,	No. 18,163, 1913		900
Pedersen,	No. 115,942, 1918		905

GERMAN PATENTS.

Thornton,	No. 275,551, 1914		909
Translation	.....		913
Reimer,	No. 279,598, 1914		919
Translation	.....		921

FRENCH PATENT.

MacCarty,	No. 448,757, 1913		924
Translation	.....		929

H—French patent 532,750, to Vogt, *et al.*, relied upon under Section 4887 of the Revised Statutes 189 936
Translation 938

I—Certified copy of papers in De-Forest v. Vogt Interference No. 53,103 (Physical) comprising:

1. Opinion of the U. S. Court of Customs and Patent Appeals, dated May 25, 1931;
2. Printed transcript of record;
3. Brief for DeForest;
4. Brief for Vogt, Massolle and Engl 193

	Offd. Page	Ptd. Page
J—Photostat of certified copy of the file wrapper and contents of De-Forest patent No. 1,489,314	193	942
K—Negatives from which the positive enlargements of Exhibit E were made (Physical)	301	
L—German patent No. 368,383 to Vogt, *et al.*, corresponding to patent in suit	305	960
Translation		961
M—Photostat of certified copy of file wrapper and contents of German patent No. 368,383	306	963
Translation		973
N—Certified copy of British Patent Office papers on British patent No. 178,442, corresponding to patent in suit, containing:		
1. Application as open to public inspection on April 15, 1922		983
2. Corresponding German application as filed in Germany		988
Translation		991
3. British patent No. 178,442, as issued		994
4. Assignment dated August 16, 1924, from Vogt, *et al.* to Tri-Ergon, A.G.	307	995
O—Diagram of Western Electric recording system	316	1000
P—Diagram of Western Electric reproducing system	326	1001
Q—Certified copy of file wrapper and contents of Craig patent No. 1,260,337	385	1002

	Offd. Page	Ptd. Page
Q-1—Haines British patent, No. 18,057 of 1906, referred to in Craig file wrapper, Exhibit Q	386	1074
R—Article by Hans Vogt in Film Kurier of February 6, 1932	461	1087
Translation		1089
S—Decision in Tonbild-Syndikat Aktien-Ges. vs. Klangfilm G.m.b.H.	462	1092
Translation		1140

	PAGE
Opinion, Campbell, D. J.	1173
Final Decree	1208
Stipulation as to Findings of Fact and Conclusions of Law	1210
Petition for Appeal	1211
Order Allowing Appeal and Supersedeas	1212
Stipulation as to Bond, etc.	1213
Assignment of Errors	1214
Note as to Citation	1216
Stipulation and Order as to Certain Exhibits	1217
Stipulated Praecipe	1218
Stipulation as to Argument	1221
Order Extending Time	1222
Stipulation as to Record	1223
Clerk's Certificate	1224
Proceedings in U. S. C. C. A., Second Circuit	1225
Opinion, Manton, J.	1225
Decree	1233
Petition for rehearing	1235
Defendants's Exhibit "O"—Drawing of Western Electric Recording System	1272
Order denying petition for rehearing	1273
Clerk's certificate	1273
Order allowing certiorari	1275

DEFENDANT'S EXHIBIT B

FORM NO. 1308 BULLETIN No. 135, May 6, 1908.

THE MUSIC MASTER

A Most Beautiful Motion Picture Fantasy

LENGTH, 500 FEET. PRICE, 14 CENTS PER FOOT

What is more miserable than a love blighted life? for the heart that truly loves can never forget. Such is the sad fate of the hero of this Biograph story. Herr Von Mitzel, a disciple of Antonio Stradivari, fell deeply in love with his pupil, the daughter of a wealthy English Lord. His love was returned by the fair young maid, who grieved at the disparity of their rank, and wished that he had been more highly born or she more lowly. Oh, the tyranny of fate. What discouraging conditions were brought to bear upon their affections, but true love can no more be diminished by showers of evil-hap than flowers are marred by timely rains; so the conspiring circumstances tended rather to strengthen than to weaken their passion.

Now, in the winter of his existence we find Von Mitzel alone and forlorn. His only companion and solace is his faithful violin, the strains of which are more eloquent than melodious, conjuring up as they do, the recollections of life's spring-time. We picture him seated at his cheerless fireside playing his, or rather her favorite selection, and as the sweet tones float out upon the silent night, there appears on the wall a phantasmagorial portrayal of his thoughts, which bring him back to days of yore. The image of his inamorata is first seen; then the lesson on the harpsichord, when he declares his love, next the scene of her being forced by her parents into an odious marriage compact, then a duel with his rival in which he is wounded. This scene dissolves into the reappearance of the girl.

The subject is most beautiful and touching, and is sure to win the sympathetic approval of the spectator, besides being a work of photographic excellence.

No. 3403 **CODE WORD—Revelry**

Produced and Controlled Exclusively by the

American Mutoscope & Biograph Co.

East 14th Street, New York City

PACIFIC COAST BRANCH, 116 North Broadway, Los Angeles Cal.

Licensees { Williams, Brown & Earle. Kleine Optical Company.
Society Italian "Cines" Great Northern Film Company.
American Mutoscope & Biograph Company.

DEFENDANT'S EXHIBIT F

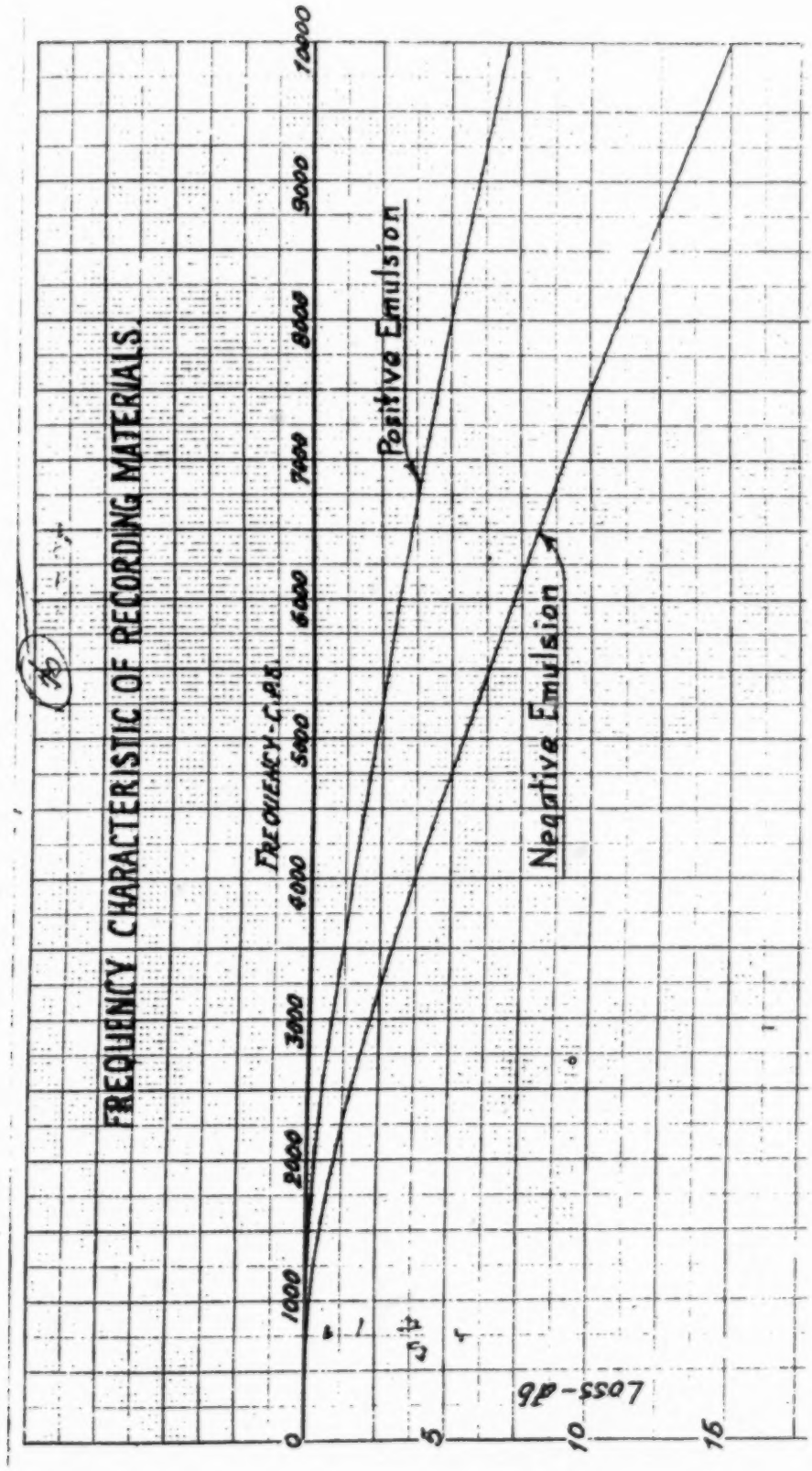

DANIEL BENDANN & DAVID BENDANN.

Improvement in Photographic Backgrounds.

No. 125,522 Patented April 9, 1872.

Fig 2

Fig. 4

Fig 3

Fig. 1

Witnesses:

Everett S Hayden

Chas Slosson

Inventors:

Daniel Bendann

David Bendann

123,522

UNITED STATES PATENT OFFICE.

DANIEL BENDANN AND DAVID BENDANN, OF BALTIMORE, MARYLAND.

IMPROVEMENT IN PHOTOGRAPHIC BACKGROUNDS.

Specification forming part of Letters Patent No. 123,522, dated April 9, 1872.

Specifications describing an improved process of preparing photographic background studies and negatives thereof, and of printing backgrounds upon photographs and photographic prints, invented by DANIEL BENDANN and DAVID BENDANN, both of the city of Baltimore, State of Maryland.

The preparation of backgrounds for photographs and photographic prints being usually attended with great expense on account of the number and size of paintings required, and the artistic skill necessary for their production, and the best results obtained being so meager, unsatisfactory, and unartistic, the obtaining of suitable backgrounds at a reduced expense, and free from the defects alluded to has been a great desideratum in photography, and this object we accomplish in the following manner:

Figure 1 is a given landscape. Fig. 2 is a plain photograph. Fig. 3 is a rough mask. Fig. 4 is a photograph with landscape printed in.

A landscape, Fig. 1, or other subject desired for the given background is delineated upon canvas or other material, in such a manner as to secure graduated lights and shades that will produce required atmospheric and scenic effects in the backgrounds of photographs, made by the process hereinafter explained, which is mainly accomplished by making the high lights lighter and the dark shades darker. The size of the picture thus delineated is immaterial, and it may be made of any dimensions to suit the convenience of the artist. A negative of this picture is then taken with the common photographic camera, and with this negative the background of the photograph is made in the manner hereinafter specified.

It is obvious that any required number of negatives may be made of the picture thus delineated, and as these negatives can be furnished at a trifling cost, obviating the necessity of procuring expensive paintings for desired backgrounds, the great commercial value of this part of our invention is apparent.

When backgrounds are desired for photographs of persons or other objects in nature, the negative of the object is made with the common photographic camera in the usual mode, and the photograph of this object is then printed in the common way with the customary dove-colored, dark gray, or other desired plain background, it not being necessary to shade off either the object delineated, or the plain background; and after the picture, Fig. 2, is printed ready for toning, the negative is removed, and the background negative is suitably adjusted over the print, Fig. 2, just made; a cloth, the hand, or a mask, Fig. 3, roughly shaped in the form of the printed object in Fig. 2, being placed over the background negative directly above the object, to prevent the rays of light falling upon the object, except at the pleasure of the artist; and the background (*b b* in Fig. 4) is then printed upon the photograph, the artist manipulating this cloth or or mask, Fig. 3, so as to harmoniously blend the background with the outlines of the object (*a* in Fig. 4) already printed; and when the background has been printed to the desired point, the completed photograph, Fig. 4, is toned in the ordinary manner.

This process is especially valuable for printing upon gelatine or other substances for photo-lithographic purposes and for tinted or colored photographs, as much labor and great expense are saved thereby; and it is also desirable in making backgrounds for old photographs or photographs of sculpture, old paintings, engravings, and other pictures.

When a given background is required for a photograph that already has a scenic background, the old background may be painted out or otherwise stopped out, (although this is not essential,) so that it will print white, and then the desired shade can be printed in either before or after the given background is made in the manner heretofore described.

It is apparent that a desired background may in like manner be printed upon a vignetted photograph that will harmonize with the vignette. It is also obvious that with one negative of the sitter or main object photographed any number of prints may be made, all having different backgrounds, the number and variety being only limited by the number of background negatives in possession of the photographer.

The ease and celerity with which the art of printing in backgrounds by the process just described, may be acquired makes our invention especially advantageous to the public, and it will be found that the following among other

objects greatly desired, but never before obtained, have been thereby secured, namely: The background is rendered entirely subordinate to the main object photographed. There are no sharp outlines between this main object (*a* in Fig. 4) and the background, (*b b* in Fig. 4,) but the whole photograph is harmonious in tone and shade.

Scenic and atmospheric effects are produced that hitherto it has been impossible to obtain, and the minutest details, even in the outlines of the main object, (*a* in Fig. 4,) photographed, such as floating hairs or the finest-meshed lace, are accurately preserved and faithfully delineated.

We claim as our invention—

1. The delineation, upon canvas or other material, of the desired objects in nature or of art, in such a manner as to secure graduated lights and shades that will produce required atmospheric and scenic effects in the backgrounds of photographs and photographic prints, in the manner described.

2. The printing of backgrounds in photographs and photographic prints, by the use of properly-prepared background negatives without the necessity of painting out or otherwise stopping out original backgrounds, in the manner described.

DANIEL BENDANN.
DAVID BENDANN.

Witnesses:
WM. H. MCCABE,
WM. H. BAYZAND.

No. 606,993. Patented July 5, 1898.

C. F. JENKINS.

DEVICE FOR OBTAINING STEREOSCOPIC EFFECTS IN EXHIBITING PICTURES.

(Application filed June 19, 1897.)

No Model.)

Fig. 1.

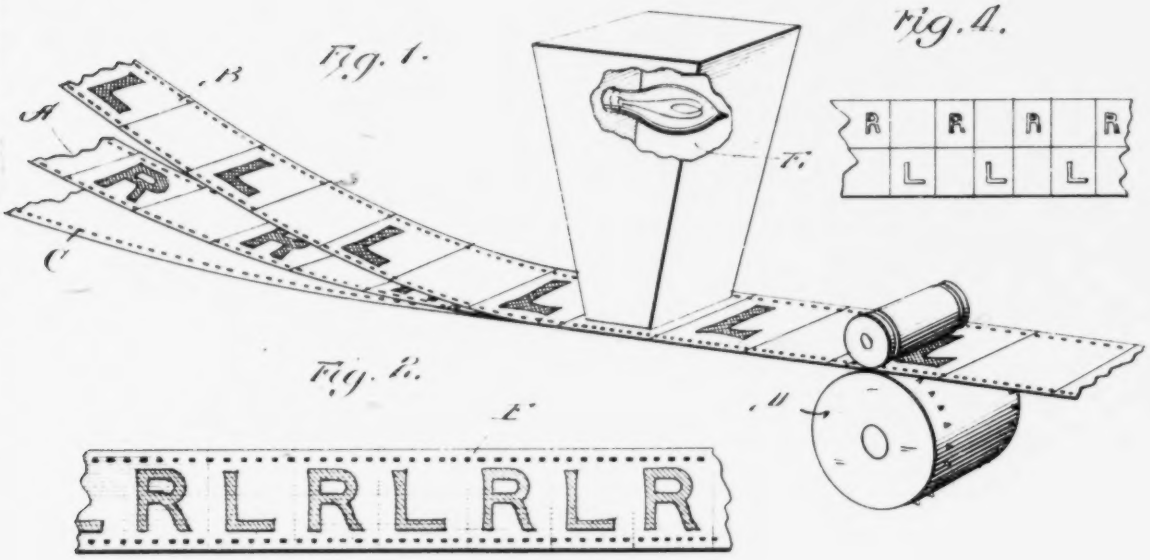

Fig. 4.

Fig. 2.

Fig. 3.

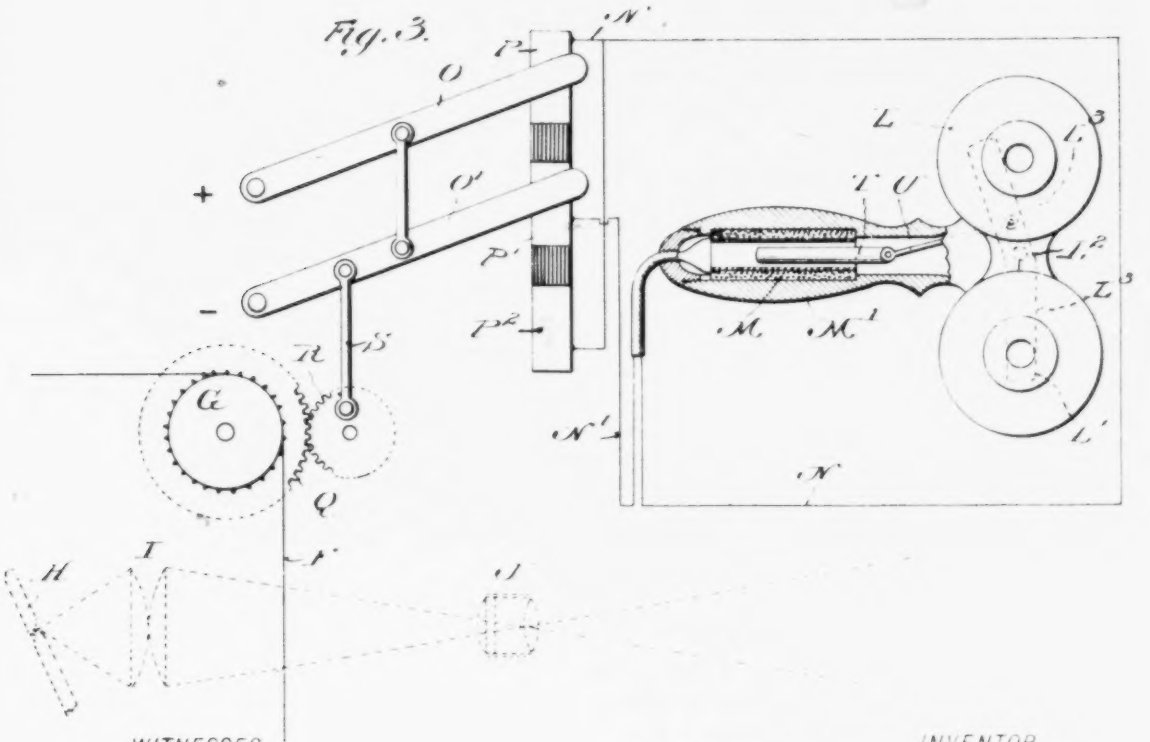

WITNESSES

Henry S. Potter.

Edwin G. Yeabower.

INVENTOR

Charles Francis Jenkins

BY

Miles & Bruce,

ATTORNEYS.

UNITED STATES PATENT OFFICE.

CHARLES FRANCIS JENKINS, OF WASHINGTON, DISTRICT OF COLUMBIA, ASSIGNOR OF ONE-HALF TO EMILE BERLINER, OF SAME PLACE.

DEVICE FOR OBTAINING STEREOSCOPIC EFFECTS IN EXHIBITING PICTURES.

SPECIFICATION forming part of Letters Patent No. 606,993, dated July 5, 1898.

Application filed June 19, 1897. Serial No. 641,455. (No model.)

To all whom it may concern:

Be it known that I, CHARLES FRANCIS JENKINS, a citizen of the United States, residing at Washington, District of Columbia, have invented certain new and useful Improvements in Devices for Obtaining Stereoscopic Effects in Exhibiting Pictures; and I do hereby declare the following to be a full, clear, and exact description of the invention, such as will enable others skilled in the art to which it appertains to make and use the same.

The object of this invention is to provide means whereby the observer in looking at series pictures showing objects in motion may see the objects in such relief as is given by a stereoscope. For illustration I have selected devices that permit pictures thrown upon a screen to be so seen simultaneously by each individual of an assembly; but many other embodiments of the invention are obviously possible.

A common stereoscope uses a pair of pictures showing the object as seen from two points whose separation is approximately equal to that of the right and left eyes, and pictures analogous to the pictures of such a pair are herein designated as "right" pictures and "left" pictures. Apparatus in accordance with this invention exhibits to the right eye in rapid succession a series of right pictures of a moving object and during such exhibition exhibits to the left eye an approximately corresponding series of left pictures, whereby the object is perceived in relief and in motion. The two sets of pictures may be made up of pairs of synchronously-taken right and left pictures, and these may be simultaneously exhibited to the right and left eyes, respectively. Neither condition is indispensable, however, and with the apparatus illustrated the impressions upon the two retinas are made alternately. Preferably the two series of pictures are combined upon an ordinary strip or film, and under ordinary inspection neither the strip nor the pictures when projected are noticeably different from the ordinary film and pictures, although this film bears alternating right and left pictures; but if the projected pictures be viewed with the aid of devices that allow only the right-eye pictures to be seen by the right eye and the left-eye pictures by the left eye the moving object is seen in full stereoscopic relief.

In the drawings, Figure 1 shows the means for obtaining a strip having in the same line alternating right and left pictures. Fig. 2 shows a portion of such strip. Fig. 3 is a partly-diagrammatic plan showing the projecting devices, the observing devices, and the connections whereby movements of the first cause synchronous movements in the second. Fig. 4 shows a modified strip.

In Fig. 1, A and B are film-strips bearing only right pictures and left pictures, respectively, and each having its pictures approximately a picture's width apart. These strips are so superposed that the pictures of each register with the spaces between the pictures of the other, and the three are then fed forward, preferably by a sprocket-drum D, whose teeth engage in registering perforations in the three beneath a beam of light at E, and thus both sets are printed upon the third strip, which, being properly developed, becomes the strip F ready for use. The strip F is placed in a suitable projecting apparatus, which may consist of a drum G for feeding the strip, a source of light H, a condenser I, a projecting lens J, and suitable devices (not shown) for operating the drum and insuring the placing of successive pictures accurately in the projecting beam of light at exactly the proper intervals. The projected pictures may be viewed through an opera-glass L or any binocular eyepiece adapted for supporting devices for alternately interrupting the lines of vision from the two eyes. As shown, the device L is provided with a shutter L′, pivoted at L^2 and limited in movement by stops L^3. The shutter is swung back and forth on its pivot synchronously with the advance of the pictures into the path of the beam of projecting light in such manner that while a left picture is on the screen the view by the right eye is cut off, and vice versa. To accomplish this result, a solenoid M is mounted in the handle M′ of the opera-glass and connected with any convenient source of current by wires N N′ and a simple current-reversing device. This is shown as consisting of two pivoted conducting-bars O O′, insulated from each other, but connected to swing together over conducting-

blocks P P' P², of which the first and last are connected with the wire N, while the other is connected with the wire N'. By means of a gear Q, moving with the drum G, a meshing pinion R, and a link S the drum in rotating so far as to advance the strip a picture's width swings both the bars O O' from the blocks upon which they rest, respectively, to the adjacent blocks, and thus reverses the current in the solenoid. Such reversal either draws inward or pushes outward a magnetized steel core T, connected by a link U to the shutter, and thereby swings the latter out of the line of sight of one eye and into the line of sight of the other. If then the view of the right eye, for example, be unobstructed and if the film be so placed that a right picture is projected, thereafter the whole series of pictures will be exhibited synchronously with the changes of the shutter, and the right and left eyes will see only right and left pictures, respectively, until the whole series has passed through the projecting beam.

Obviously the number of devices L is unlimited, and the conducting-wires merely replace the usual chain by which coin-freed opera-glasses are ordinarily secured to opera-chairs in public halls.

It is also plain that the construction may be widely varied within the limits of my invention, and I do not therefore wish to confine myself to the specific forms set forth. For example, I have shown in Fig. 4 the spaced left pictures alined alongside the spaced right pictures and upon the same strip, this being a form usable with an easily-made modification of the other devices shown.

What I claim is—

1. A series-picture strip bearing alternating right and left pictures of the same object.

2. A series-picture strip bearing in alinement alternating right and left stereoscopic pictures.

3. The method of printing a series-stereoscopic-picture strip by superposing right and left stereoscopic series negatives upon a sensitive blank strip in position to print both series in alternating succession upon said blank.

4. A series-stereoscopic-picture negative on which alined pictures all adapted to be viewed by the same eye alternate with blank spaces in width approximately equal to said pictures.

5. The combination with projecting devices, of means for advancing a series-picture strip therefor, a binocular eyepiece, a shutter adapted to alternately obstruct the lines of sight through said eyepiece, a solenoid arranged to actuate said shutter, conductors leading from said mechanism to said solenoid, and means whereby the movements of said mechanism control the current in said conductors.

In testimony whereof I affix my signature in presence of two witnesses.

C. FRANCIS JENKINS.

Witnesses:
HUGH M. STERLING,
WALLACE GREENE.

J. L. WALKER.

VOICE RECORDING AND REPRODUCING DEVICE.

APPLICATION FILED SEPT. 2, 1913.

1,186,717.

Patented June 13, 1916.

5 SHEETS—SHEET 1.

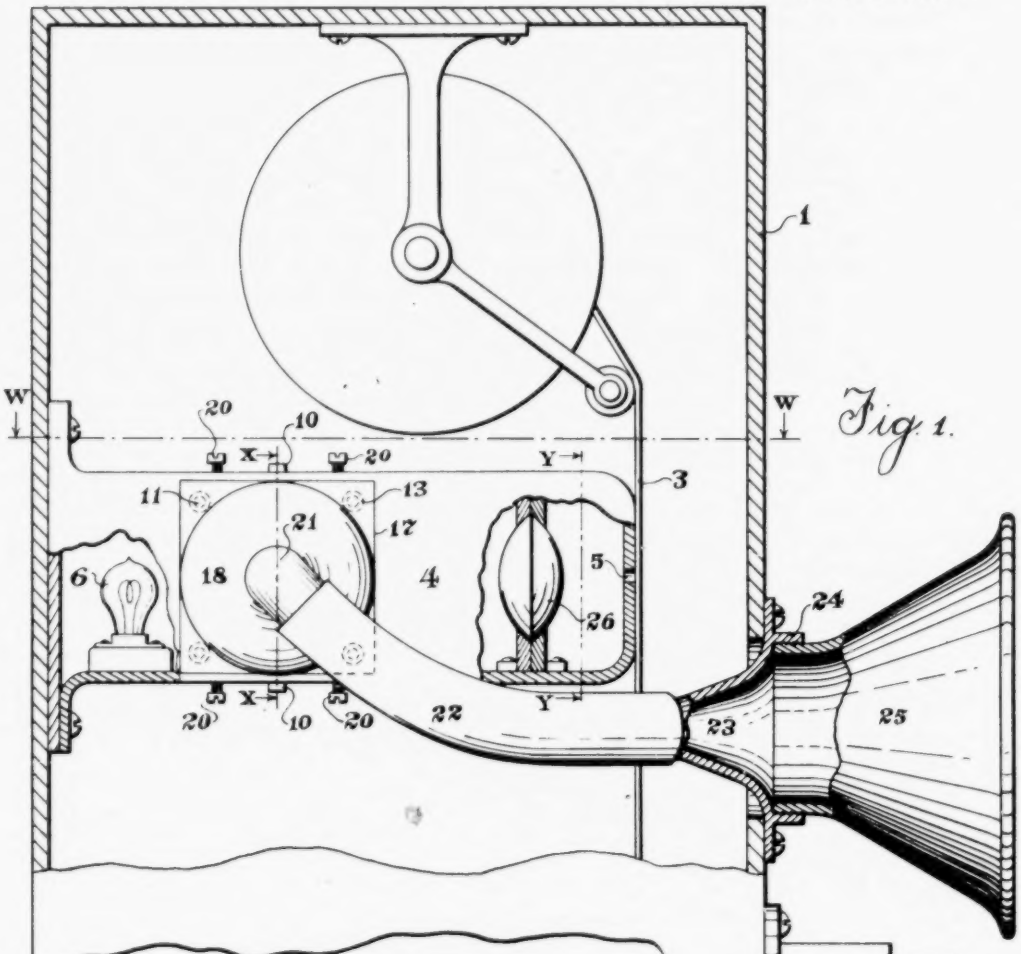

Fig. 1.

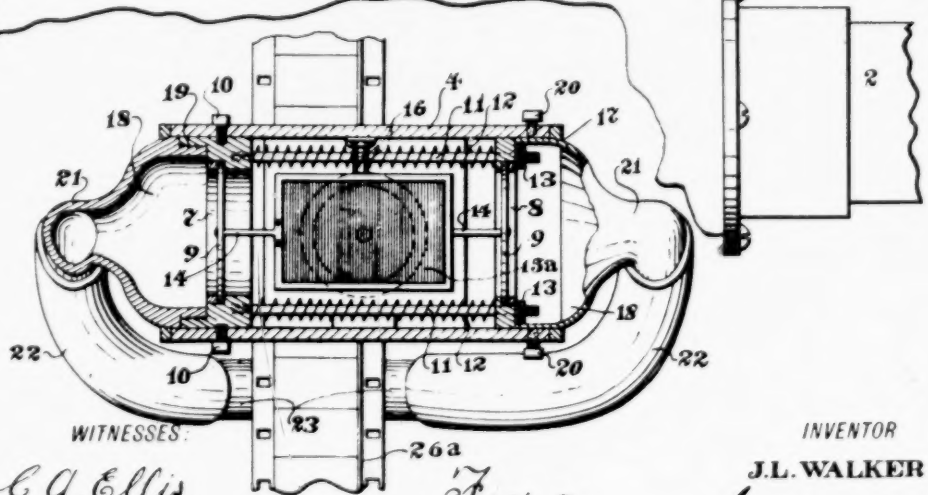

Fig. 3.

WITNESSES:

C. A. Ellis.

R. E. Bruckner.

INVENTOR

J. L. WALKER

BY John McSpellman

ATTORNEY

J. L. WALKER.

VOICE RECORDING AND REPRODUCING DEVICE.

APPLICATION FILED SEPT. 2, 1913.

1,186,717.

Patented June 13, 1916.

5 SHEETS—SHEET 2.

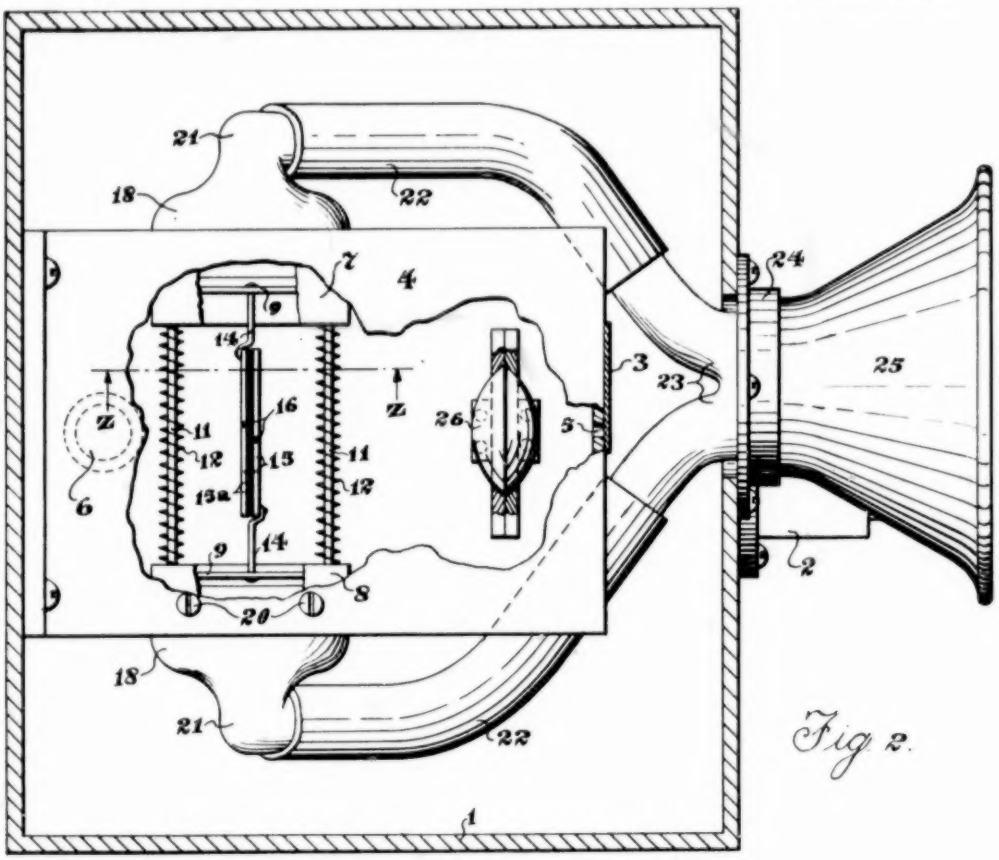

Fig. 2.

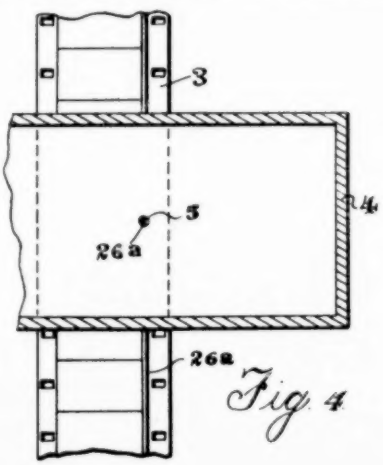

Fig. 4

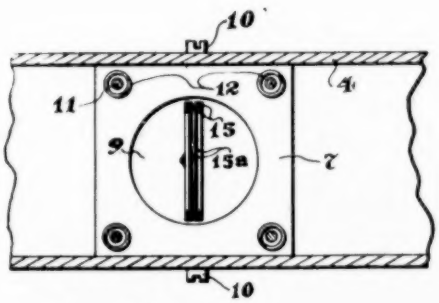

Fig. 5

WITNESSES:

C. A. Ellis.

R. E. Bruckner.

INVENTOR

J. L. WALKER

BY John McClelland.

ATTORNEY

J. L. WALKER.

VOICE RECORDING AND REPRODUCING DEVICE.

APPLICATION FILED SEPT. 2, 1913.

1,186,717.

Patented June 13, 1916.

5 SHEETS—SHEET 3.

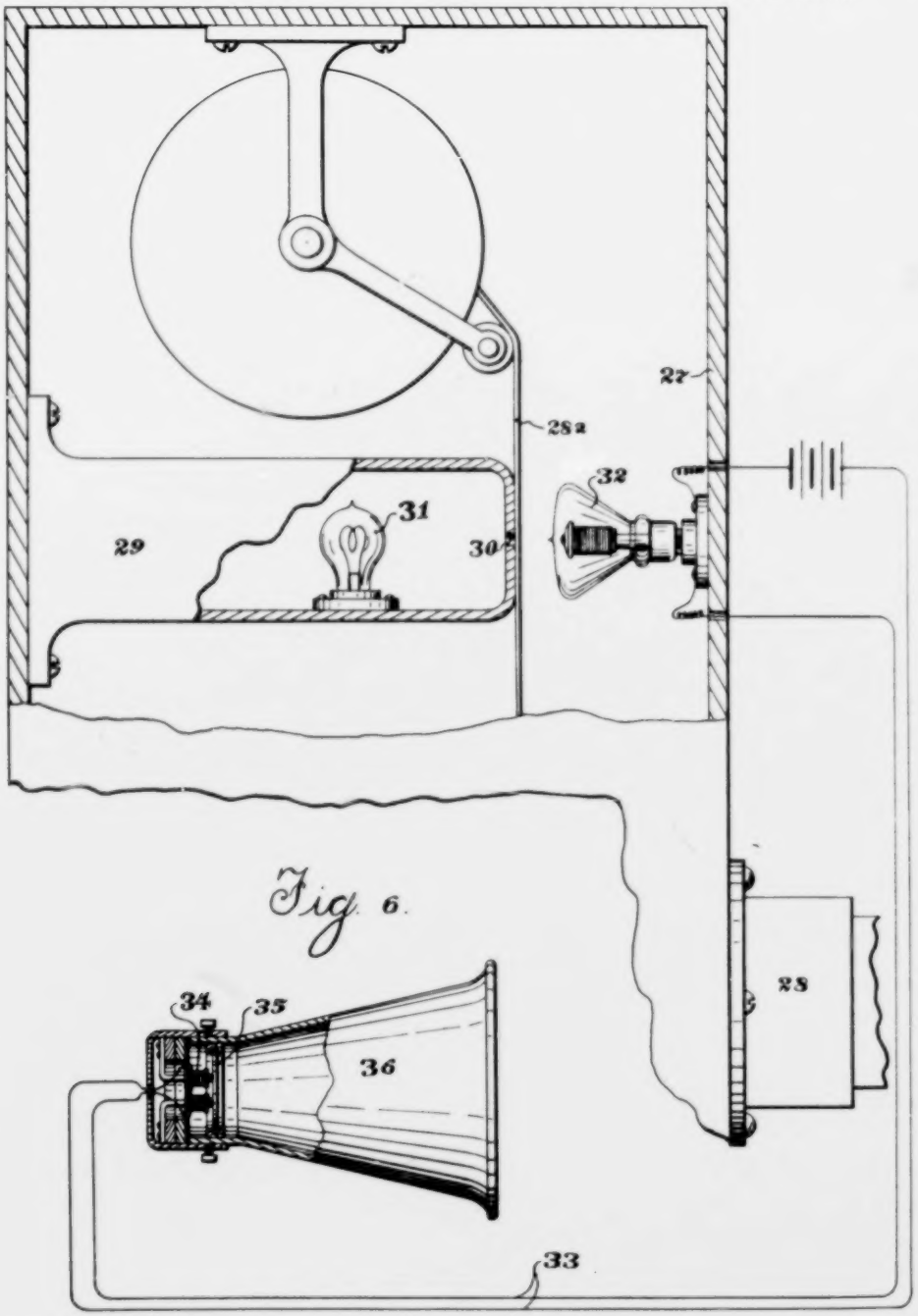

Fig. 6.

WITNESSES:

C. A. Ellis.

A. E. Bruckner.

INVENTOR

J. L. WALKER

BY John McSpeddan.

ATTORNEYS

J. L. WALKER.

VOICE RECORDING AND REPRODUCING DEVICE.

APPLICATION FILED SEPT. 2, 1913.

1,186,717.

Patented June 13, 1916.

5 SHEETS—SHEET 4.

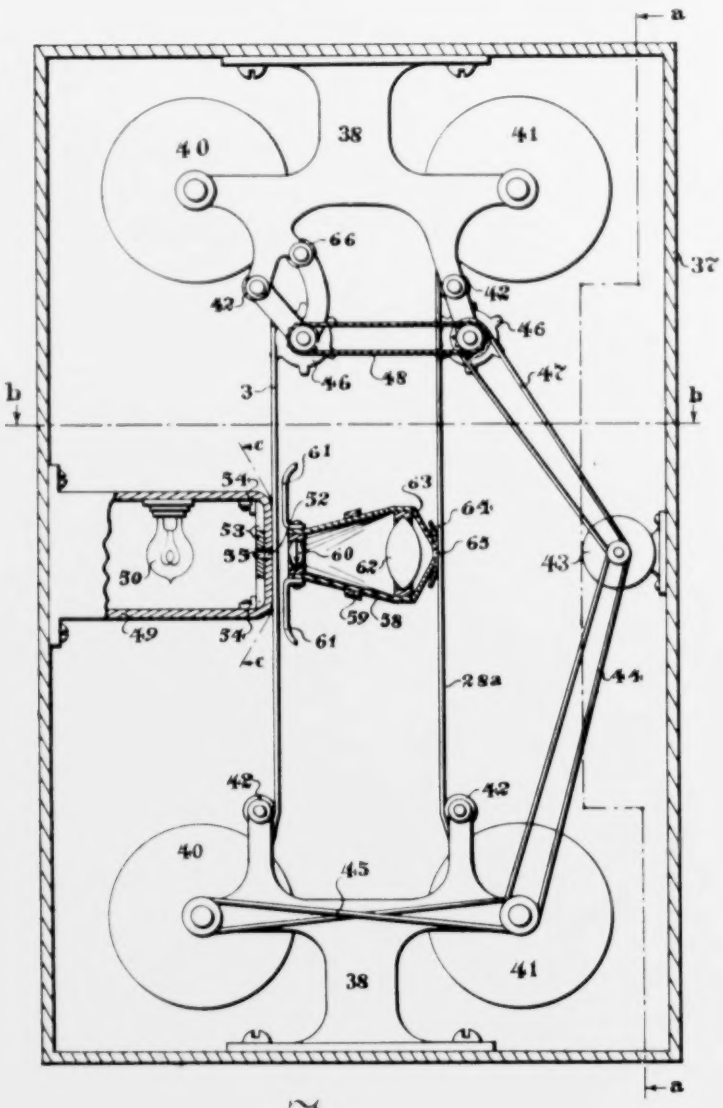

Fig. 7.

WITNESSES.

C. A. Ellis.

A. E. Bruckner.

INVENTOR

J. L. WALKER

By Wm. M. Spellman

ATTORNEY

856

J. L. WALKER.

VOICE RECORDING AND REPRODUCING DEVICE.

APPLICATION FILED SEPT. 2, 1913.

1,186,717.

Patented June 13, 1916.

5 SHEETS—SHEET 5.

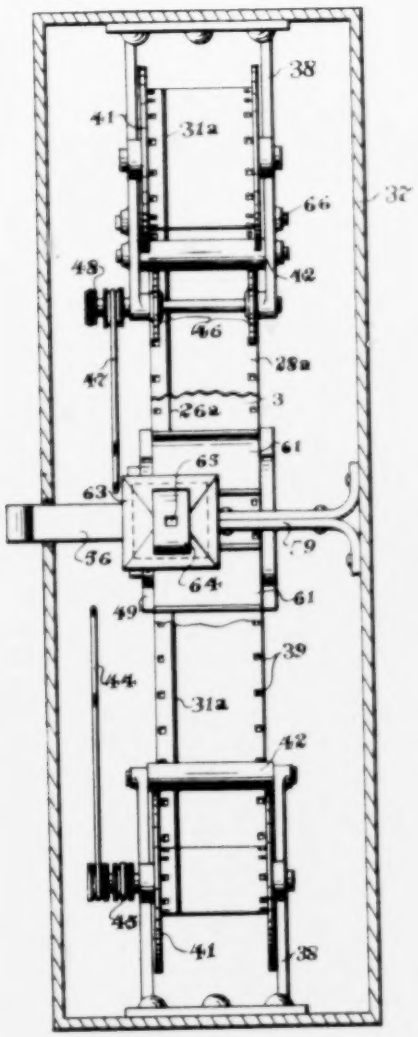

Fig. 8.

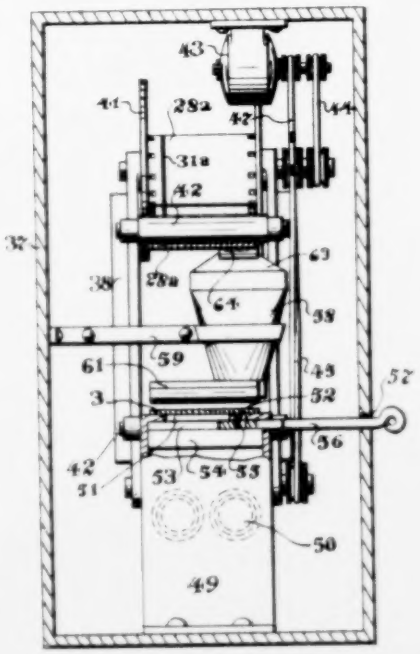

Fig. 9

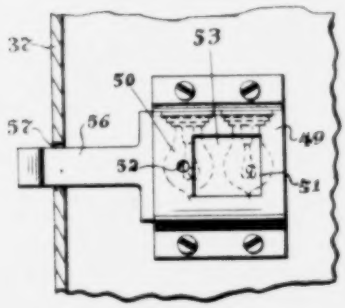

Fig. 10

WITNESSES:

E. A. Ellis.

A. E. Bruckner.

INVENTOR

J. L. WALKER

BY John McGrellman.

ATTORNEY

857

UNITED STATES PATENT OFFICE.

JACK L. WALKER, OF DALLAS, TEXAS.

VOICE RECORDING AND REPRODUCING DEVICE.

1,186,717. Specification of Letters Patent. Patented June 13, 1916.

Application filed September 2, 1913. Serial No. 787,682.

To all whom it may concern:

Be it known that I, JACK L. WALKER, a citizen of the United States, residing at Dallas, in the county of Dallas and State of Texas, have invented certain new and useful Improvements in Voice Recording and Reproducing Devices, of which the following is a specification.

My invention relates to a new and useful sound recording and reproducing device. Its object is to provide an attachment for a moving picture camera, which, while a picture is being taken, will produce upon the film receiving the picture a continuous photographic record of sounds that appropriately accompany the picture.

Another object is to provide an apparatus that will cause a certain quantity of light to vary in intensity proportionately with sound vibrations of air, so that by focusing the light upon a strip of moving film, a photographic record of the sounds may be produced.

A further object is to provide an attachment for a moving picture projecting machine, which, when a strip of film carrying a photographic sound record is traveling before the projecting lens, will reproduce from the film the sounds recorded thereupon, the projecting pictures and reproduced sounds being synchronous.

A still further object is to provide a means for reproducing sound from a photographic record carried by a film by maintaining travel of the film and focusing light through its record-carrying portion upon a selenium cell, contained in an electrical circuit with an electro-magnetic sound reproducer, causing the resistance of the circuit to vary proportionately as the record on the film varies in transparency.

Still another object is to provide a means by which a continuous sound record photographically produced upon a negative film may be accurately reproduced upon a positive film in an enlarged size.

Finally, the object of my invention is to provide a device of the character described, that will be strong, durable, simple and efficient and comparatively easy to construct.

With these and various other objects in lowing specification, and illustrated in the accompanying drawings, wherein:

Figure 1 is a view, showing in side elevation, my attachment for a moving picture camera, together with certain interior portions of the camera. Fig. 2 is a horizontal sectional view of the same, the section being taken upon the line W—W of Fig. 1. Fig. 3 is a detail sectional view taken upon X—X of Fig. 1. Fig. 4 is a detail sectional view taken upon the line Y—Y of Fig. 1. Fig. 5 is a detail sectional view taken upon the line Z—Z of Fig. 2. Fig. 6 is a view, showing in side elevation my attachment for a moving picture projecting machine, together with certain interior portions of the machine, this view being also made to include an electro-magnetic sound reproducer which is shown diagrammatically connected with the projecting machine by an electrical circuit. Fig. 7 is a view showing in side elevation my machine for transferring an enlarged sound record from the negative to a positive film, the casing of the machine being shown in section. Fig. 8 is a vertical sectional view of the same taken upon the line *a—a* of Fig. 7. Fig. 9 is a detail horizontal sectional view taken upon the line *b—b* of Fig. 7. Fig. 10 is a detail vertical sectional view taken upon the line *c—c* of Fig. 7.

Referring now more particularly to the drawings, wherein like reference characters designate similar parts in all the figures, the numeral 1 denotes the casing of a moving picture camera, having the usual lens holder 2, opposite to which a strip of film 3 is adapted to travel within the camera.

The particular manner of supporting the film and actuating its travel is old and therefore requires no description or illustration in connection with my device.

At an elevation above the lens holder 2, the film 3 has contact with the front end of a rectangular box 4 impervious to light mounted upon the rear wall of the casing, the front wall of said box being formed with a pin hole aperture 5, opposite to one of the edge portions of the film. In the rear portion of the box 4, there is mounted an incandescent electric bulb 6, which may

856

J. L. WALKER.

VOICE RECORDING AND REPRODUCING DEVICE.

APPLICATION FILED SEPT. 2, 1913.

1,186,717.

Patented June 13, 1916.

5 SHEETS—SHEET 5.

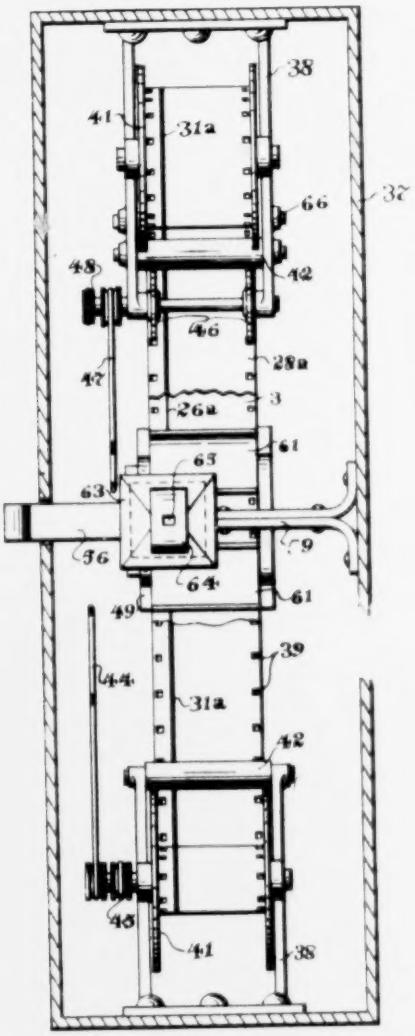

Fig. 8.

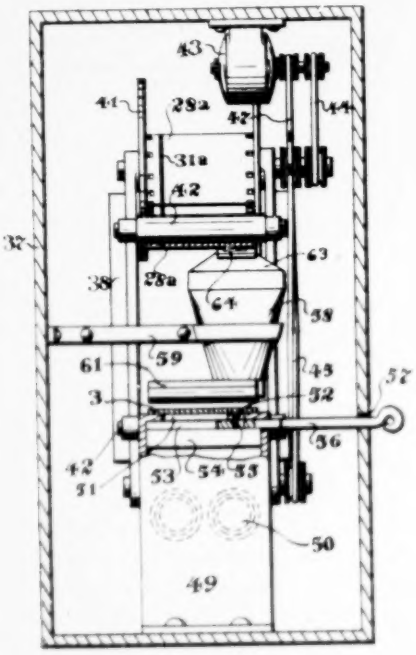

Fig. 9

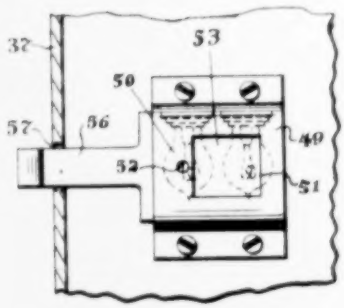

Fig. 10

WITNESSES

E. A. Ellis

W. E. Bruckner

INVENTOR

J. L. WALKER

BY John McSpelliman

ATTORNEY

UNITED STATES PATENT OFFICE.

JACK L. WALKER, OF DALLAS, TEXAS.

VOICE RECORDING AND REPRODUCING DEVICE.

1,186,717. Specification of Letters Patent. Patented June 13, 1916.

Application filed September 2, 1913. Serial No. 787,682.

To all whom it may concern:

Be it known that I, JACK L. WALKER, a citizen of the United States, residing at Dallas, in the county of Dallas and State of Texas, have invented certain new and useful Improvements in Voice Recording and Reproducing Devices, of which the following is a specification.

My invention relates to a new and useful sound recording and reproducing device. Its object is to provide an attachment for a moving picture camera, which, while a picture is being taken, will produce upon the film receiving the picture a continuous photographic record of sounds that appropriately accompany the picture.

Another object is to provide an apparatus that will cause a certain quantity of light to vary in intensity proportionately with sound vibrations of air, so that by focusing the light upon a strip of moving film, a photographic record of the sounds may be produced.

A further object is to provide an attachment for a moving picture projecting machine, which, when a strip of film carrying a photographic sound record is traveling before the projecting lens, will reproduce from the film the sounds recorded thereupon, the projecting pictures and reproduced sounds being synchronous.

A still further object is to provide a means for reproducing sound from a photographic record carried by a film by maintaining travel of the film and focusing light through its record-carrying portion upon a selenium cell, contained in an electrical circuit with an electro-magnetic sound reproducer, causing the resistance of the circuit to vary proportionately as the record on the film varies in transparency.

Still another object is to provide a means by which a continuous sound record photographically produced upon a negative film may be accurately reproduced upon a positive film in an enlarged size.

Finally, the object of my invention is to provide a device of the character described, that will be strong, durable, simple and efficient and comparatively easy to construct.

With these and various other objects in view, my invention has relation to certain novel features of construction and operation, an example of which is described in the following specification, and illustrated in the accompanying drawings, wherein:

Figure 1 is a view, showing in side elevation, my attachment for a moving picture camera, together with certain interior portions of the camera. Fig. 2 is a horizontal sectional view of the same, the section being taken upon the line W—W of Fig. 1. Fig. 3 is a detail sectional view taken upon X—X of Fig. 1. Fig. 4 is a detail sectional view taken upon the line Y—Y of Fig. 1. Fig. 5 is a detail sectional view taken upon the line Z—Z of Fig. 2. Fig. 6 is a view, showing in side elevation my attachment for a moving picture projecting machine, together with certain interior portions of the machine, this view being also made to include an electro-magnetic sound reproducer which is shown diagrammatically connected with the projecting machine by an electrical circuit. Fig. 7 is a view showing in side elevation my machine for transferring an enlarged sound record from the negative to a positive film, the casing of the machine being shown in section. Fig. 8 is a vertical sectional view of the same taken upon the line *a*—*a* of Fig. 7. Fig. 9 is a detail horizontal sectional view taken upon the line *b*—*b* of Fig. 7. Fig. 10 is a detail vertical sectional view taken upon the line *c*—*c* of Fig. 7.

Referring now more particularly to the drawings, wherein like reference characters designate similar parts in all the figures, the numeral 1 denotes the casing of a moving picture camera, having the usual lens holder 2, opposite to which a strip of film 3 is adapted to travel within the camera.

The particular manner of supporting the film and actuating its travel is old and therefore requires no description or illustration in connection with my device.

At an elevation above the lens holder 2, the film 3 has contact with the front end of a rectangular box 4 impervious to light mounted upon the rear wall of the casing, the front wall of said box being formed with a pin hole aperture 5, opposite to one of the edge portions of the film. In the rear portion of the box 4, there is mounted an incandescent electric bulb 6, which may derive current from any suitable source. In the middle portion of the box 4, a pair of rectangular frames 7 and 8 are mounted

oppositely and respectively adjacent to the side walls of the box, said frames serving to mount similar circular diaphragms 9. The frame 7 is permanenuly engaged in a rigid relation with the box 4 by two cap screws 10, one of which enters said frame through the top of the box and one through the bottom thereof. The two frames 7 and 8 are connected at their corners by four elongated horizontal bolts 11, mounted fast in the frame 7, but passing freely through the frame 8. Upon each bolt 11, there is mounted a coiled spring 12 having its extremities respectively abutting against the two frames, serving to hold the frame 8, firmly pressed against adjusting thumb-nuts 13 mounted upon the free ends of the bolts 11. By means of said thumb-nuts, the frame 8 may be subjected to a delicate adjustment to or from the frame 7. To the centers of the diaphragms 9, there are secured short horizontally alined wires 14, which are respectively connected with two rectangular frames 15 containing sheets of mica or some similar transparent substance, indicated by the numeral 15ª. Said sheets of mica are suspended vertically and transversely of the box 4 by threads 16, attached to the top of said box, midway between its side walls and centrally secured to the upper edges of the members 15. The threads 16 and wires 14 together hold the members 15ª in a slightly spaced relation. Upon each of the members 15ª, there are provided a plurality of very closely adjacent vertical lines of a black or other opaque color. The side walls of the box 4 are formed opposite to the diaphragms 9 with rectangular apertures 17, into each of which there is fitted a metallic sound transmitter 18, one of which has a screw-threaded connection with the frame 7 as indicated at 19, while the other is held in place by set-screws 20, passing respectively through the top and bottom walls of the box 4. The transmitters 18 are formed with integral elbows 21, which respectively communicate with tubes 22, (preferably flexible) extending toward the front of the casing 1, above the lens holder 2, and communicating with a member 23 mounted in the front casing wall. The member 23 is formed with an annular threaded flange 24, receiving a member 25 having the form of an ordinary telephone mouth-piece.

In the front portion of the box 4, there is mounted a lens 26, so disposed that such light from the lamp 6 as reaches said lens through the members 15 will be focused through the aperture 5 upon an edge portion of the film 3, forming a line 26ª thereon.

An explanation will now be given as to the operation of the above described attachment. The film 3 is properly lighted, and the travel of the film is maintained in the usual manner. The air vibrations created by the various sounds accompanying the picture, are conducted by a mouth-piece 25 and the tubes 22 to the diaphragms 9 causing the same to vibrate in synchronism with the air vibrations. From the diaphragms 9, these same vibrations are communicated to the members 15ª, the vibrating motion of said members being parallel and opposite. When the members 15ª are at rest, the vertical lines provided upon one of said members will be opposite to the spaces between the lines provided upon the other member so that a negligible quantity of light from the lamp 6 will pass through the two members. But when the two members are in vibratory motion, the relation between the lines formed upon the two members will be constantly varying, the magnitude of this variation being proportionate to the magnitude of the air vibrations. While the members 15ª are in vibration, therefore, a constantly varying quantity of light emitted by the lamp 6 will pass through the members 15ª, the intensity of this light, varying in unison with the intensity of the vibratory force acting upon the members 15ª. A certain quantity of the light thus passing through the members 15ª will pass also through the lens 26 which will focus this light upon the moving film 3 through the aperture 5, thus producing upon the sensitized surface of the film the line 26ª parallel and adjacent to one of the film edges. This line will vary in transparency according as the light which produced it varied in intensity, and hence will be an accurate photographic record of the sounds produced in the vicinity of the camera during the taking of a moving picture, each sound being recorded adjacent to the pictures taken while the sound was being produced.

A description will now be given of an attachment to a moving picture projecting machine, which attachment serves to reproduce the sounds recorded upon a film in the manner set forth in the preceding description. The casing 27 of the projecting machine is provided with the usual lens holder 28, opposite to which a film 28ª is adapted to travel vertically within said casing. The means for supporting the film within said casing and for actuating its travel are not new and require no description or illustration herein. A rectangular box 29 is mounted within the casing 1 upon the rear wall thereof in substantially the same relation to the member 28 and to the film 28ª as has been already described in connection with the moving picture camera attachment. In the front of the box 29 is formed a pin-hole aperture 30, through which light from an

carried by an edge portion of the strip 28ª. The record line 31ª carried by the film 28ª has precisely the same variations in transparency as that produced upon the film 3, but has a greater width. The means for producing the line 31ª are hereinafter described. Directly opposite to the aperture 30, a selenium cell 32 is mounted upon the front wall of the casing, said cell being contained in a circuit 33 in which are also included the coils 34 of a powerful sound transmitter, the diaphragm of which is indicated at 35 and the sound amplifying horn at 36. Any suitable source of electromotive force may be included in the circuit 33.

In the operation of my attachment to a motion picture projecting machine the light 31 will be maintained constantly lighted while the film 28ª is in motion. The rays from the lamp 31 passing through the aperture 30 and through the record line 31ª upon the film will impinge upon the selenium cell 32, with an intensity varying as the transparency of the record varies. This will cause the resistance of the circuit 33 to vary in synchronism with the variations in transparency of the sound record so that the resulting vibrations of the diaphragm 35 will reproduce the sounds recorded upon the film. Since the sounds recorded upon the film are reproduced simultaneously with the projection of pictures made during the production of the sounds, the projection of the pictures upon the film will be synchronous with the sound reproduction. That this synchronism may be perfect, the rays of light should pass through the record line 31ª at the same distance above the lens-holder as in the moving picture camera attachment.

A description will now be given of a machine which is employed to produce upon a positive film 28ª an enlarged reproduction of the sound-record line 26ª formed as previously described upon a negative film. Within a casing 37, upon the top and bottom thereof, there are respectively mounted pairs of brackets 38, each pair of brackets serving to rotatably support a pair of horizontally alined film reels 40 and 41. The reels 40 and the reels 41 are respectively vertically alined. The upper reel 40 when mounted in its correlated brackets carries a negative film 3, which film is vertically extended to the lower reel 40 upon which it is adapted to be wound. The upper reel 41 when placed in its correlated bracket carries a positive film 28ª which is extended vertically to the lower reel 41 upon which it is adapted to be wound. The vertical portions of the two films 3 and 28ª have a parallel spaced relation. Each pair of brackets 38 carries a pair of guide rollers 42, which serve to hold the vertical portions of the

The two films are adapted to travel downwardly at exactly the same rate of speed, their travel being induced by a small electric motor 43 driving the lower reel 41 through a belt 44. The lower reel 41 drives the lower reel 40 through a crossed belt 45. The lowermost reels 40 and 41 are driven, not to actuate the travel of the films, but to take up the slack of the films as they are driven downwardly. The mechanism for driving the films comprises two pairs of star wheels 46 mounted in the upper pair of brackets 38, engaging the lines of perforation 39 carried by the edge portions of the two films. The star wheels driving the film 28ª are driven from the motor 43 through a belt 47, and the other pair of star wheels is driven by a sprocket chain 48 carried by sprocket wheels mounted upon the spindles of the star wheels.

The vertical portion of the film 3 is contiguous with one end of a closed box 49, containing a lamp or a plurality of lamps 50, the other end of which box is mounted fast upon the casing 37. That end of the box 49 with which the film 3 is contiguous, is formed with a rectangular opening 51, having its vertical edges alined with the vertical edges of the picture carrying portion of the film, and having a height equal to one of the pictures carried by the film 3. In the same wall of the box 49, there is formed a pin hole aperture 52 which is alined with the record line 26ª. Within the box 49, there is mounted a shutter 53 which is held contiguous with the apertured end of said box by angular strips 54 respectively secured to the top and bottom of said box. The shutter 53 is imperforate except for the pin hole aperture 55, which in one limiting position of the shutter is alined with the aperture 52. In the same limiting position of the shutter, it completely covers the rectangular aperture 51, preventing any light escaping from the box 49 except through the pin-hole apertures 55 and 52. In the other limiting position of said shutter, the same is shifted to a large extent out of the box 49 uncovering the rectangular aperture 51 and covering the pin-hole aperture 52. The means for shifting the shutter 53 between its limiting positions comprises a handle member 56 integrally formed with the shutter and passing through an aperture 57 in the casing 37.

Between the vertical portions of the films 3 and 28ª, there is mounted a funnel-shaped casing 58 having its center line transverse of the films and passing through the aperture 52. The member 58 is supported rigidly by a bracket 59 secured to one of the walls of the casing 37. In the small end of the member 58, which end is closely adjacent

oppositely and respectively adjacent to the side walls of the box, said frames serving to mount similar circular diaphragms 9. The frame 7 is permanently engaged in a rigid relation with the box 4 by two cap screws 10, one of which enters said frame through the top of the box and one through the bottom thereof. The two frames 7 and 8 are connected at their corners by four elongated horizontal bolts 11, mounted fast in the frame 7, but passing freely through the frame 8. Upon each bolt 11, there is mounted a coiled spring 12 having its extremities respectively abutting against the two frames, serving to hold the frame 8, firmly pressed against adjusting thumb-nuts 13 mounted upon the free ends of the bolts 11. By means of said thumb-nuts, the frame 8 may be subjected to a delicate adjustment to or from the frame 7. To the centers of the diaphragms 9, there are secured short horizontally alined wires 14, which are respectively connected with two rectangular frames 15 containing sheets of mica or some similar transparent substance, indicated by the numeral 15^a. Said sheets of mica are suspended vertically and transversely of the box 4 by threads 16, attached to the top of said box, midway between its side walls and centrally secured to the upper edges of the members 15. The threads 16 and wires 14 together hold the members 15^a in a slightly spaced relation. Upon each of the members 15^a, there are provided a plurality of very closely adjacent vertical lines of a black or other opaque color. The side walls of the box 4 are formed opposite to the diaphragms 9 with rectangular apertures 17, into each of which there is fitted a metallic sound transmitter 18, one of which has a screw-threaded connection with the frame 7 as indicated at 19, while the other is held in place by set-screws 20, passing respectively through the top and bottom walls of the box 4. The transmitters 18 are formed with integral elbows 21, which respectively communicate with tubes 22, (preferably flexible) extending toward the front of the casing 1, above the lens holder 2, and communicating with a member 23 mounted in the front casing wall. The member 23 is formed with an annular threaded flange 24, receiving a member 25 having the form of an ordinary telephone mouth-piece.

In the front portion of the box 4, there is mounted a lens 26, so disposed that such light from the lamp 6 as reaches said lens through the members 15 will be focused through the aperture 5 upon an edge portion of the film 3, forming a line 26^a thereupon.

An explanation will now be given as to the operation of the above described attachment to a moving picture camera. While a picture is being taken, the lamp 6 is kept lighted, and the travel of the film is maintained in the usual manner. The air vibrations created by the various sounds accompanying the picture, are conducted by a mouth-piece 25 and the tubes 22 to the diaphragms 9 causing the same to vibrate in synchronism with the air vibrations. From the diaphragms 9, these same vibrations are communicated to the members 15^a, the vibrating motion of said members being parallel and opposite. When the members 15^a are at rest, the vertical lines provided upon one of said members will be opposite to the spaces between the lines provided upon the other member so that a negligible quantity of light from the lamp 6 will pass through the two members. But when the two members are in vibratory motion, the relation between the lines formed upon the two members will be constantly varying, the magnitude of this variation being proportionate to the magnitude of the air vibrations. While the members 15^a are in vibration, therefore, a constantly varying quantity of light emitted by the lamp 6 will pass through the members 15^a, the intensity of this light, varying in unison with the intensity of the vibratory force acting upon the members 15^a. A certain quantity of the light thus passing through the members 15^a will pass also through the lens 26 which will focus this light upon the moving film 3 through the aperture 5, thus producing upon the sensitized surface of the film the line 26^a parallel and adjacent to one of the film edges. This line will vary in transparency according as the light which produced it varied in intensity, and hence will be an accurate photographic record of the sounds produced in the vicinity of the camera during the taking of a moving picture, each sound being recorded adjacent to the pictures taken while the sound was being produced.

A description will now be given of an attachment to a moving picture projecting machine, which attachment serves to reproduce the sounds recorded upon a film in the manner set forth in the preceding description. The casing 27 of the projecting machine is provided with the usual lens holder 28, opposite to which a film 28^a is adapted to travel vertically within said casing. The means for supporting the film within said casing and for actuating its travel are not new and require no description or illustration herein. A rectangular box 29 is mounted within the casing 1 upon the rear wall thereof in substantially the same relation to the member 28 and to the film 28^a as has been already described in connection with the moving picture camera attachment. In the front of the box 29 is formed a pin-hole aperture 30, through which light from an incandescent bulb 31 within the box may reach and pass through a record line 31^a

carried by an edge portion of the strip 28ª. The record line 31ª carried by the film 28ª has precisely the same variations in transparency as that produced upon the film 3, but has a greater width. The means for producing the line 31ª are hereinafter described. Directly opposite to the aperture 30, a selenium cell 32 is mounted upon the front wall of the casing, said cell being contained in a circuit 33 in which are also included the coils 34 of a powerful sound transmitter, the diaphragm of which is indicated at 35 and the sound amplifying horn at 36. Any suitable source of electromotive force may be included in the circuit 33.

In the operation of my attachment to a motion picture projecting machine the light 31 will be maintained constantly lighted while the film 28ª is in motion. The rays from the lamp 31 passing through the aperture 30 and through the record line 31ª upon the film will impinge upon the selenium cell 32, with an intensity varying as the transparency of the record varies. This will cause the resistance of the circuit 33 to vary in synchronism with the variations in transparency of the sound record so that the resulting vibrations of the diaphragm 35 will reproduce the sounds recorded upon the film. Since the sounds recorded upon the film are reproduced simultaneously with the projection of pictures made during the production of the sounds, the projection of the pictures upon the film will be synchronous with the sound reproduction. That this synchronism may be perfect, the rays of light should pass through the record line 31ª at the same distance above the lens-holder as in the moving picture camera attachment.

A description will now be given of a machine which is employed to produce upon a positive film 28ª an enlarged reproduction of the sound-record line 26ª formed as previously described upon a negative film. Within a casing 37, upon the top and bottom thereof, there are respectively mounted pairs of brackets 38, each pair of brackets serving to rotatably support a pair of horizontally alined film reels 40 and 41. The reels 40 and the reels 41 are respectively vertically alined. The upper reel 40 when mounted in its correlated brackets carries a negative film 3, which film is vertically extended to the lower reel 40 upon which it is adapted to be wound. The upper reel 41 when placed in its correlated bracket carries a positive film 28ª which is extended vertically to the lower reel 41 upon which it is adapted to be wound. The vertical portions of the two films 3 and 28ª have a parallel spaced relation. Each pair of brackets 38 carries a pair of guide rollers 42, which serve to hold the vertical portions of the two films constantly spaced the same distance during their travel.

The two films are adapted to travel downwardly at exactly the same rate of speed, their travel being induced by a small electric motor 43 driving the lower reel 41 through a belt 44. The lower reel 41 drives the lower reel 40 through a crossed belt 45. The lowermost reels 40 and 41 are driven, not to actuate the travel of the films, but to take up the slack of the films as they are driven downwardly. The mechanism for driving the films comprises two pairs of star wheels 46 mounted in the upper pair of brackets 38, engaging the lines of perforation 39 carried by the edge portions of the two films. The star wheels driving the film 28ª are driven from the motor 43 through a belt 47, and the other pair of star wheels is driven by a sprocket chain 48 carried by sprocket wheels mounted upon the spindles of the star wheels.

The vertical portion of the film 3 is contiguous with one end of a closed box 49, containing a lamp or a plurality of lamps 50, the other end of which box is mounted fast upon the casing 37. That end of the box 49 with which the film 3 is contiguous, is formed with a rectangular opening 51, having its vertical edges alined with the vertical edges of the picture carrying portion of the film, and having a height equal to one of the pictures carried by the film 3. In the same wall of the box 49, there is formed a pin hole aperture 52 which is alined with the record line 26ª. Within the box 49, there is mounted a shutter 53 which is held contiguous with the apertured end of said box by angular strips 54 respectively secured to the top and bottom of said box. The shutter 53 is imperforate except for the pin hole aperture 55, which in one limiting position of the shutter is alined with the aperture 52. In the same limiting position of the shutter, it completely covers the rectangular aperture 51, preventing any light escaping from the box 49 except through the pin-hole apertures 55 and 52. In the other limiting position of said shutter, the same is shifted to a large extent out of the box 49 uncovering the rectangular aperture 51 and covering the pin-hole aperture 52. The means for shifting the shutter 53 between its limiting positions comprises a handle member 56 integrally formed with the shutter and passing through an aperture 57 in the casing 37.

Between the vertical portions of the films 3 and 28ª, there is mounted a funnel-shaped casing 58 having its center line transverse of the films and passing through the aperture 52. The member 58 is supported rigidly by a bracket 59 secured to one of the walls of the casing 37. In the small end of the member 58, which end is closely adjacent to the box 49, there is secured a pair of guide plates 61 respectively extending upwardly

and downwardly, and curved at their free extremities slightly away from the adjacent film, guiding the same between said plates and the box 49. Within the small end of the casing 58, is centrally mounted a double convex lens 60, which will transmit any rays of light passing through the apertures 55 and 52 and through the film and will conduct said rays divergently to a larger cylinder lens 62 mounted in the large end of the member 58. The lens 62 will converge the rays of light passing through it, focusing them in a small rectangle upon an edge portion of the film 28^a. To prevent any diffusion of these rays such as might cause some of them to impinge upon the central portion of the film 28^a, the large end of the casing 58 is inclosed as indicated at 63, the member 63 being formed with a slit 65 through which the rays are projected upon the film 28^a. Above and below the slit 65, curved guide plates 64 may be secured to the member 63 to steady the film 28^a during its vertical travel.

An explanation will now be given as to the operation of the device which has just been described. The object of this device is to reproduce the record line carried by the negative film 3 in an enlarged size upon the positive film 28^a, so that when the positive film is passed through a projecting machine carrying my sound reproducing attachment, a larger quantity of light may be made to vary in intensity synchronously with a certain succession of sounds, so that the fluctuations in the resistance of the selenium cell previously mentioned may be more pronounced. During the process of enlarging the record line, the films 3 and 28^a will travel at a much slower rate than when said films are traveling either in the motion picture camera or projecting machine. Hence, in the enlarging machine, a much greater quantity of light will pass through every portion of the record line 26^a and will be focused in the form of a small rectangle upon the edge portion of the film 28^a. This light, in passing through the record line of the film 3 will vary in intensity according as said record line varies in transparency, and this light being focused upon the film 28^a will produce thereupon a record line 31^a varying in transparency uniformly with the record line 26^a. The enlargement of the line produced upon the film 28^a is due to the use of the concentrating cylinder lens 62.

The machine which has just been described may be employed also to print positively upon the film 28^a, the pictures negatively carried by the film 3. In using the machine for this purpose, the positive and negative films will be carried as before, respectively by the two upper reels 40 and 41. In this case, however, the positive film instead of passing vertically to the lower reel 41, will be extended over a roller 66 carried by the uppermost pair of brackets 38 and will then be extended downwardly contiguously with the film 3 passing with said film between the box 49 and the plates 61. After passing below the lower plate 61, the film 28^a will be extended to the lower reel 41 upon which it will be wound. The star wheels 46 engaging the apertures 39 of the film 3 will also engage the same apertures in the film 28^a, so that the one pair of star wheels will actuate the travel downwardly of the two films. The shutter 53 will now be shifted outwardly so as to leave the rectangular aperture 51 unobstructed allowing the light from the lamp 50 to pass through said aperture 51 and through the two films, the two films being actuated downwardly. The light passing through the film 3 will produce upon the sensitized face of the film 28^a positive reproductions of the negative pictures carried by the film 3.

In Figs. 9 and 10 the box 49 contains two lamps 50 of which the left hand lamp is used to reproduce the picture, when light from the other lamp is shut off by shutter 56. The right hand lamp is used, when the left hand lamp is shut off, in the reproduction of the magnified voice record.

The invention is presented as including all such modifications and changes as properly come within the scope of the following claim.

What I claim is:

In a device of the character described, the combination with an elongated strip of sensitized film, of means for inducing longitudinal travel of said strip, means for projecting light upon a portion of the film during its travel, a plurality of adjacent members interposed between the source of said light and the film, said members having alternate transparent and opaque portions of very small area, means for adjusting said members parallel to each other, vibratory diaphragms correlated with said members, and communicating their vibrations to the same, the joint transparency of said members being varied proportionately to the intensity of the vibrations communicated to the same, and means for conducting sound vibrations of air to said diaphragms.

In testimony whereof I have signed my name to this specification in the presence of two subscribing witnesses.

JACK L. WALKER.

Witnesses:
J. S. MURRAY,
MAYBELLE REAVES.

R. M. CRAIG.

PHONOGRAPHIC ATTACHMENT FOR MOVING PICTURE MACHINES.

APPLICATION FILED MAY 6, 1913.

1,260,337.

Patented Mar. 26, 1918.

3 SHEETS—SHEET 1.

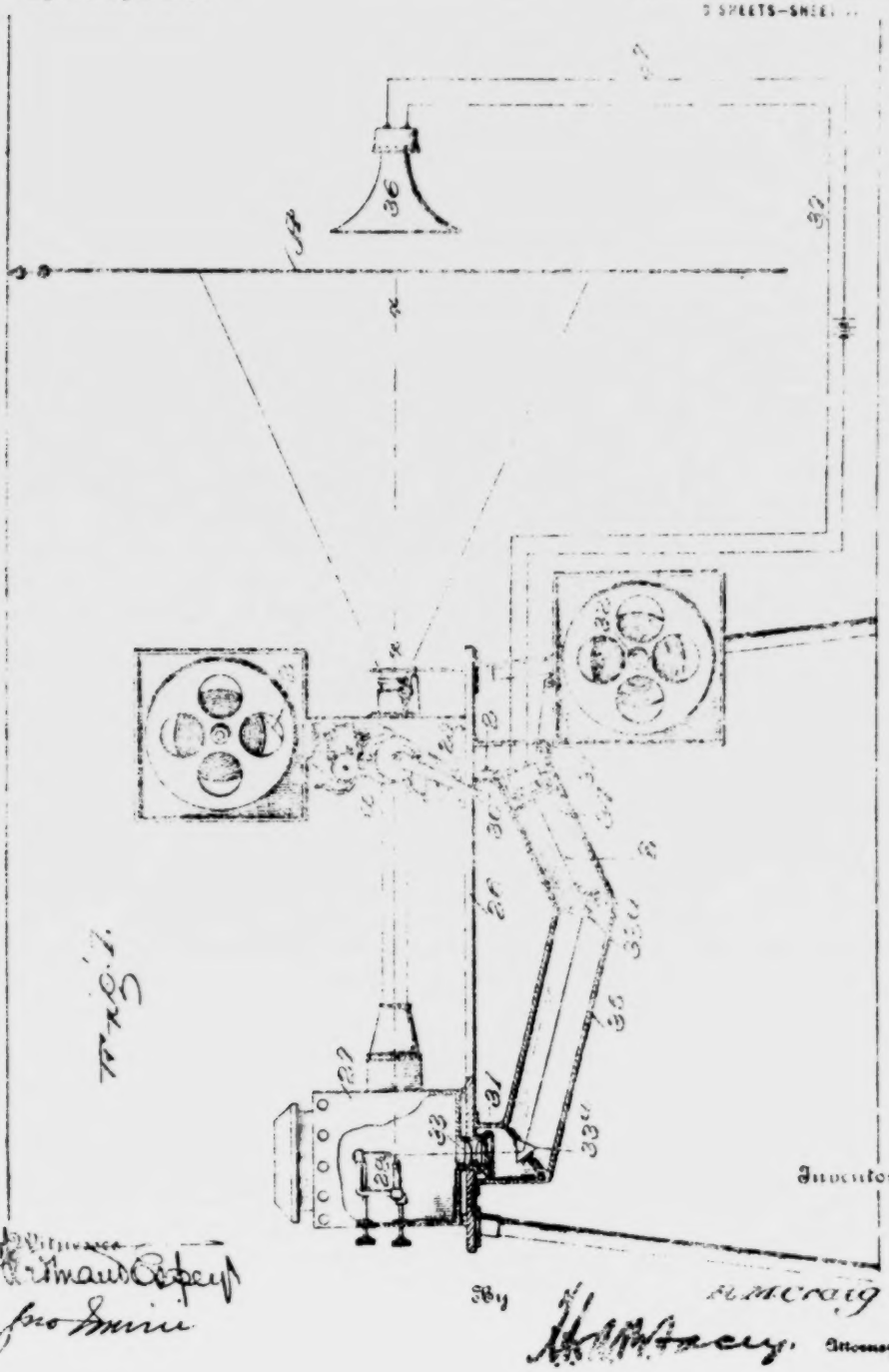

R. M. CRAIG.

PHONOGRAPHIC ATTACHMENT FOR MOVING PICTURE MACHINES.

APPLICATION FILED MAY 6, 1913.

1,260,337. Patented Mar. 26, 1918.

3 SHEETS—SHEET 2.

Fig. 2.

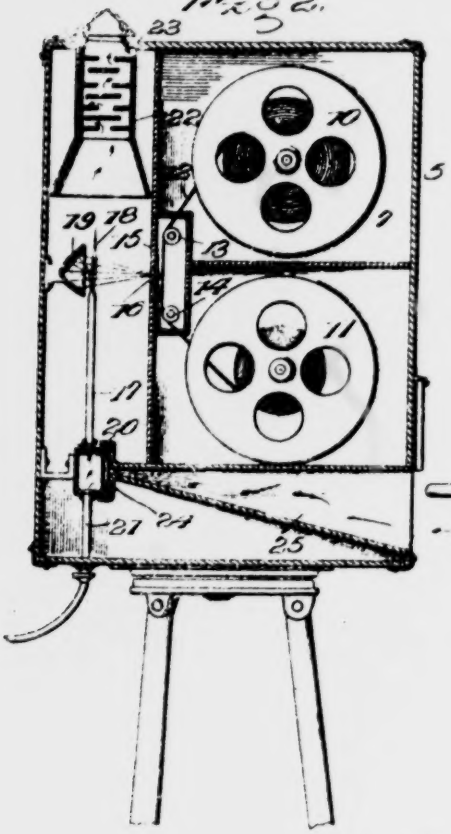

Fig. 3

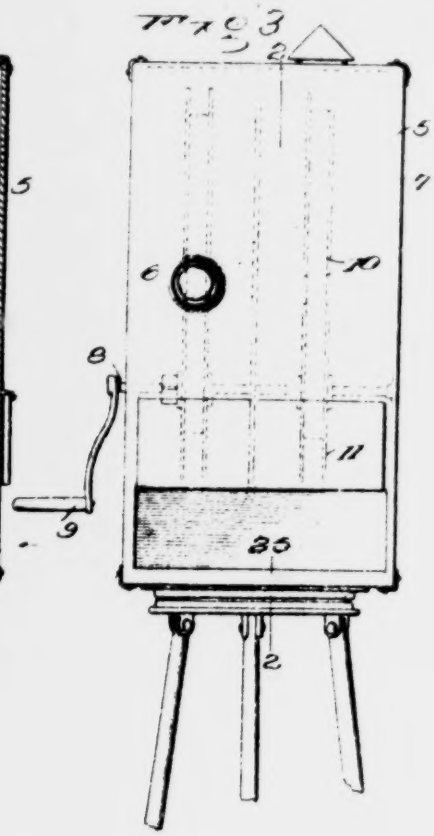

Fig. 4.

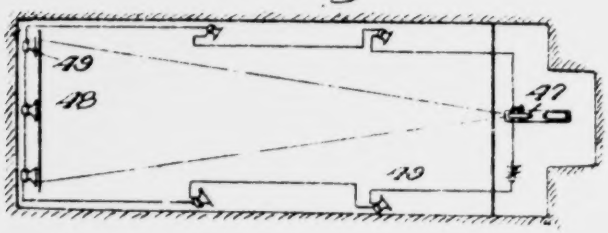

Inventor
R. M. Craig

Witnesses
Ferdinand Capey
Jno. Imrie

By H. A. Wheeler, Attorneys.

R. M. CRAIG.

PHONOGRAPHIC ATTACHMENT FOR MOVING PICTURE MACHINES.

APPLICATION FILED MAY 6, 1913.

1,260,337.

Patented Mar. 26, [illegible]

3 SHEETS-SHEET [illegible]

Fig. 5.

Fig. 6.

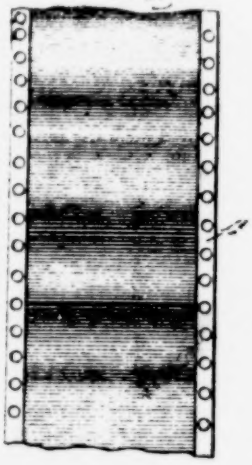

Fig. 7.

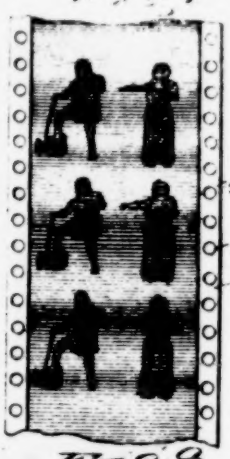

Fig. 7a.

Fig. 9.

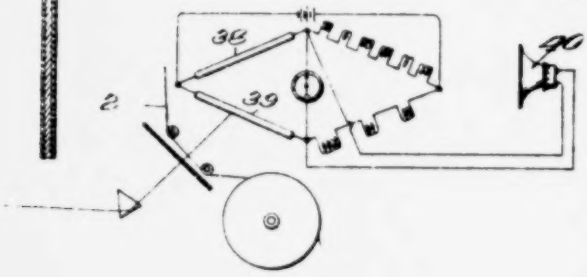

Fig. 8.

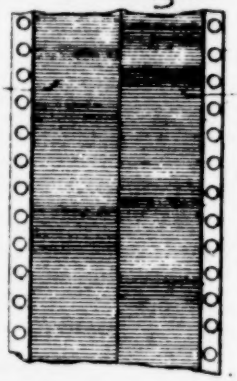

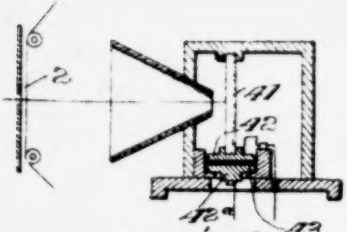

Fig. 10.

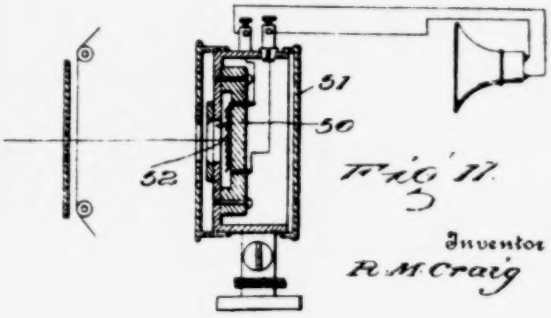

Fig. 11.

Witnesses

Ferdinand Eberstein

Jno. Smith

Inventor

R. M. Craig

By

Attorneys.

UNITED STATES PATENT OFFICE.

RICHARD M. CRAIG, OF SAN ANTONIO, TEXAS.

PHONOGRAPHIC ATTACHMENT FOR MOVING-PICTURE MACHINES.

1,260,337. Specification of Letters Patent. Patented Mar. 26, 1918.

Application filed May 6, 1913. Serial No. 765,959.

To all whom it may concern:

Be it known that I, RICHARD M. CRAIG, citizen of the United States, residing at San Antonio, in the county of Bexar and State of Texas, have invented certain new and useful Improvements in Phonographic Attachments for Moving-Picture Machines, of which the following is a specification.

My invention relates to phonographic or "talking" moving pictures, and more particularly to the art of taking and projecting such moving pictures with the accompaniment of sound recording and sound reproduction respectively.

Many attempts have been made to secure with the reproduction of moving pictures, the reproduction of sounds correlated therewith. Almost all these attempts have been made by operating the moving picture film in conjunction with the ordinary phonograph or gramophone. The difficulty of using an instrument of this character to reproduce sounds correlated with the film is that the phonograph must of necessity be practically a separate machine from either the camera whereby the pictures are taken, or the projector whereby they are thrown upon the screen, and that with either the gramophone or the phonograph it is practically impossible to secure a sound record which shall be conterminus with the moving picture film. The maximum sound record as used today will not run for longer than five minutes, whereas the moving picture scene may be very much longer. Further than this, it is practically impossible to run the phonograph or gramophone in synchronism with the film and this is a very vital necessity for the proper correlation of the sound record with the pictures. Again, if the film runs off or breaks, the phonograph must be stopped, and it is almost impossible to again adjust the film in proper correspondence and correlation with the sound record. The mere connecting up of the sound reproducing mechanism with the mechanism of the moving picture machine will not secure a complete correspondence and correlation between the sound and the pictures, for the reason that the film is liable to slip and to tighten or loosen upon the reels, and it would be extremely hard to adjust the sound record so as to correspond accurately with the motion of the picture. An accurate correspondence of the sound with the event with which the sound is correlated, is, of course, absolutely necessary to prevent a disjunction which would entirely spoil the effect.

Furthermore, the phonographic record can naturally contain only so many words and this requires the film to be made of a certain length only, this length corresponding with the phonographic record, instead of which the sound record should be made for and with the picture record of any possible scene or happening that might occur, and the sound record should have the same length as the scene record and not be limited as to length.

Again, the process of making phonographic records requires extra care and especially prepared staging. The phonograph is placed at or near the screen upon which the picture is to be projected and thus can not be run by the same mechanism which drives the moving picture film. The phonograph requires an extra attendant to place the records thereon. Furthermore, the picture record and the sound record have heretofore been taken separately and could not therefore be in accurate correspondence, nor could they ever be placed in accurate correspondence under these circumstances. It is a very difficult problem and requires an elaborate arrangement of costly mechanism to keep a film synchronized with a phonographic record. If the film happens to run off while exhibiting the phonographic record and the pictures on the film get out of time, it is practically impossible to get them in time again. If the film should happen to get torn in two or broken, which sometimes happens, and the film is cemented together, the words corresponding to the part torn out of the film can never be taken from the phonograph record, and this destroys the further use of the two together.

The primary object of my invention is the provision of mechanism whereby a sound record may be made or reproduced synchronously with the taking or reproduction of moving pictures.

A further object is to so form the sound recording or reproducing mechanism that it may be used with ordinary moving picture taking or reproducing mechanism so that no change will be required in the mechanism now used for this purpose.

A further object is to provide means

whereby the picture record and the sound record may be recorded simultaneously and by the same machine, under the control of the same operator and not individually and separately as they now are.

A further object is to provide means whereby the picture carrier, that is, the film, may also be the sound record carrier so that the pictures and the corresponding sounds shall be at all times in fixed relation to each other, taken simultaneously, reproduced simultaneously and with no possible chance of the sound record having its relation to the picture record in any way changed.

A further object is to so form the sound and picture carrier, in this case the film, that the sound may be reproduced without reproducing the picture, or the picture reproduced without reproducing the sound.

A further object is to so form the sound record that the sound vibrations may be translated into electrical vibrations, and these in turn carried to various parts of the hall within which the machine is to be used.

A still further object is to so construct the machine both for taking and reproducing the pictures and accompanying sounds that the method of operation shall be extremely simple, both as regards the taking and making of sound records and the taking and making of picture records, and as to the simultaneous or synchronous taking or reproduction.

A further object is to provide mechanism whereby the sounds may be recorded upon the picture carrying film of moving picture machines and reproduced therefrom, this film being so formed that the picture record and the sound record may overlie each other without the sound record interfering with the picture record or vice versa.

A further object of the invention is to so form the film that the picture record may be taken in the ordinary manner and printed photographically upon one side or face of the film while the sound record may be taken photographically and printed upon the other face of the film.

A further object in this connection is to provide a film for carrying moving pictures and accompanying sound records, in which the sound record is formed by a substance which does not affect or impair the transmission of ordinary or white light but which will impair, affect or be more or less impervious to the passage of rays beyond the visible rays of the spectrum.

A further object is to form a sound record upon a film capable of transmitting light, this sound record being formed by material which is pervious to ordinary white light but which is impervious to or affects the transmission of infra-red rays.

A further object is to so construct the mechanism for reproducing a sound record in conjunction with the projection of moving pictures that while the film shall move at one point intermittently to reproduce the pictures, the film shall move steadily at another point to reproduce the sound record, and in this connection to provide mechanism for causing the projection of white light through that portion of the film which is moving intermittently and causing the projection of invisible rays through that portion of the film which is moving steadily, and further in this connection to provide in combination with the means for projecting the invisible rays through said film, sound transmitting mechanism of such character as to be operated by the action of these invisible rays to thereby reproduce the sound record on the film.

My invention is illustrated in the accompanying drawings wherein:

Figure 1 is an elevation partly sectional of a moving picture machine so constructed as to reproduce a corresponding sound, the figure also showing the screen upon which the picture record is thrown and a loud-speaking phone disposed behind the screen.

Fig. 2 is a vertical section on the line 2—2 of Fig. 3 of a camera for taking moving pictures making correlated sound records.

Fig. 3 is a front elevation of the camera shown in Fig. 2.

Fig. 4 is a diagrammatic plan view of a hall or auditorium showing the arrangement of phones for transmitting the sounds reproduced by my mechanism.

Fig. 5 is a fragmentary view of one side of a film showing moving pictures thereon.

Fig. 6 is a face view of the opposite side of a film showing photographic sound records thereon.

Fig. 7 is a view of a composite film showing the position of the sound records with relation to the pictures.

Fig. 7ª is a fragmentary section of the film shown in Fig. 7.

Fig. 8 is a face view of the sound record side of a film but illustrating a plurality of records on one film.

Fig. 9 is a diagrammatic view of a bolometer as used by me for the purpose of reproducing sound vibrations.

Fig. 10 is a diagrammatic view of another form of sound reproducing mechanism.

Fig. 11 is a diagrammatic view of another form of sound reproducing mechanism.

Corresponding and like parts are referred to in the following description and indicated in all the views of the accompanying drawings by the same reference characters.

My invention is based upon the fact that infra-red rays are invisible but that these rays will affect a properly sensitized photographic film, and that these infra-red rays will affect various forms of electrical phonographic receivers or sound transmitting de-

vices. Infra red rays may be passed through an ordinary photographic film or the film of a moving picture without interfering with the proper projection of the picture by moving picture projecting apparatus. If a film is prepared, therefore, having on one side the ordinary photographic reproductions of pictures, and on the other side a phonographic sound record, capable of being reproduced only by infra-red rays, the sound record will not interfere with the passage of white light to and through the pictures and the presence of the pictures will not interfere with the passage of infra-red rays through the strip. On one side of the film or the strip, therefore, would be the ordinary picture record and on the other side would be a printed photographic record of sound, which latter record would be transparent to ordinary visible light but would more or less intercept the infra-red rays to produce variations in the projection of these rays, these variations being used to affect sound transmitting apparatus as will be later stated. Infra-red rays are below the ordinary visible spectrum. They are invisible to the naked eye and are very penetrating and are subject to the same optical laws as ordinary light.

Many substances will cut off visible light entirely but will let the infra-red rays pass nearly perfectly. Vulcanite, iodin, bromin and many other substances will permit the passage of these infra-red rays and more or less completely intercept the visible rays. Many substances such as alum, cupric chlorid, water, oxygen, carbonic acid gas, very thin metallic silver and selenite will, on the contrary, permit the passage of visible or white light but will cut off more or less the passage of the infra-red rays.

Ordinary celluloid, of which material the moving picture film is usually constructed, is very transparent, both to the visible light rays and to the infra-red rays. By coating one side of a strip of celluloid, therefore, with a substance pervious to the white light rays and the other side with a translucent substance impervious to the infra-red rays, neither of the coatings would interfere with the passage of these rays and both records, the picture record and the sound record, could be combined on one film.

For the visible light picture record, there are many photographic prints (such as most any of the present forms of positive prints) which would interfere not at all with the passage of the infra-red rays, and it is therefore only necessary to provide a proper transparent coating on the strip or film which will intercept more or less the infra-red rays and yet will not affect the passage of the rays of white light.

One of the substances which would permit visible light to pass but which is opaque or impervious to the infra-red rays is very thin metallic silver, but I do not wish to be limited to this as any material which would cut off, intercept, destroy or reflect back the infra-red rays would be equally suitable. This would be done by any substance having a high percentage of water of crystallization or a high percentage of water of constitution, a high percentage of selective reflection, or a high percentage of selective absorption. This infra-red rays intercepting substance is to be combined with gelatin, as for instance, the gelatin of the film, this gelatin acting as or being a medium for carrying said substance and this medium being subject to the photographic action for obtaining the necessary sound record.

In Figs. 5, 6, 7 and 7ª I show a portion of a film or strip of moving pictures designed to be used in my invention, both for the purpose of taking the moving pictures and for the purpose of reproducing them. Fig. 7ª is an enlarged sectional view, as it may be termed, and in this figure, 2 designates the body of the film, 3 a coating upon which the photographic picture print is made or taken, and 4 a coating of a substance which is capable of being acted upon photographically by ordinary light, and which will act as a medium to carry a substance which will act to intercept either partially or entirely infra-red rays to thereby cause the reproduction of sound by electrical transmission devices. Fig. 5 shows the face view of the film, as it may be termed, with moving pictures thereon. Fig. 6 shows the reverse side of the film and illustrates diagrammatically the sound record as photographed upon the film. Fig. 7 illustrates the compound record and shows that the sound record extends entirely across the film and therefore underlies the picture record.

While in Figs. 6 and 7 the sound record is shown as being made up of lighter or heavier lines or parallel striations extending entirely across the strip from one edge to the other, it is possible to have one record to extend from one marginal edge to the middle of the strip and another record to extend from the middle of the strip to the marginal edge. Such a record is shown in Fig. 8 wherein 4ª indicates one sound record and 4ᵇ another sound record. The film shown in Fig. 8 is particularly adapted for use in a manner hereafter described.

It is, of course, necessary that the sound record and the picture record should be made simultaneously so that there will be complete synchronism between the sound record and the events shown by the pictures. In Figs. 2 and 3, 5 designates a double camera which will take moving pictures by means of the ordinary moving picture

camera mechanism and which is provided with a compartment 6 containing the photographic camera proper having a compartment 7 which contains what may be termed the sound camera mechanism for making a negative sound record.

Inasmuch as the mechanism used for taking the moving pictures is of the ordinary form, it requires no special description. This mechanism is actuated by means of the shaft 8 having the usual crank 9. The compartment 7 wherein the sound photographing mechanism is disposed, is preferably divided into an upper and a lower reel compartment in which are located respectively the reels 10 and 11. The film or strip 12 is fed down from the upper reel 10 over the rollers 13 and 14 to the lower reel, this lower reel being mounted upon the shaft 8 and being driven therefore synchronously with the picture apparatus. Immediately behind that portion of the film 12 between the rollers 13 and 14 is a diaphragm 15 having therein a narrow slit 16.

Behind the diaphragm 15 is disposed the tube 17 of a manometric flame apparatus. The flame 18 of this apparatus is disposed immediately in front of a mirror 19 whereby the rays of light are focused upon the film through the slit 16. When the film 12 is in position, there will therefore be a bright line of light thrown upon the face of the film. The manometric tube 17 extends down into a chamber 20 from which extends a gas pipe 21 leading to any suitable source of gas. Above the flame 18 is disposed a chimney 22 having baffle plates 23 therein, which chimney permits the outward passage of the products of combustion but prevents the flame 18 from being deflected by down drafts of air.

The front of the chamber 20 is provided with a diaphragm 24 and from this diaphragm there extends a megaphone 25 which as illustrated forms part of the camera body, this megaphone being of course enlarged at its forward or front end and gradually converging until it opens into the diaphragm chamber.

It is to be understood, of course, that the film used for taking the moving pictures is shifted intermittently by mechanism as ordinarily used in moving picture machines, while the film which is used for taking the sound record moves steadily and continuously. The film or strip 12 and the film or strip upon which the moving pictures are to be taken is the same as the ordinary negative moving picture films.

While I have illustrated a manometric flame for the purpose of photographically recording sound upon the film 12, I wish it understood that I may use a speaking arc in place of the manometric flame and that I do not wish to be limited to any particular apparatus for making this photographic sound record as it is obvious that many different forms of apparatus may be used for this purpose. The manometric flame apparatus is shown purely for purposes of illustration.

With the manometric flame apparatus, the operation of the camera is evident. The camera is intended to be used precisely the same as an ordinary moving picture camera. While the picture is being taken, the film of the picture taking apparatus moves intermittently as before stated while the film of the sound apparatus moves steadily. The vibrations of the air caused by the sound waves being recorded, affect the diaphragm in a way well understood, and this in turn affects the manometric flame. The variations of pressure in the manometric tube 17 will cause variations in the intensity of the flame and consequently variations in the rays of light passing through the slit 16. As a consequence a photographic record of the sound will be made upon the sensitized strip, this sound record showing the variations in intensity of the light just in proportion to the amplitude of the sound vibrations. The sound record shows in the developed negative film as alternately light and dark striations which while having the appearance of great irregularity, are in reality exceedingly regular and harmonic, only changing their order with the change in the sound vibrations of which they are a record.

The record so produced and above referred to is the same form of record as is used in the photographone of Ruhmer and the reproduction of speech or sound from such a photophonographic record has been found to be astonishingly clear and quite strong, much clearer and purer than the reproduction of the ordinary wax cylinder phonograph. From a photographic sound record as above described, it is possible to secure many reproductions, each of which will reproduce the original sounds with equal exactitude.

It will be noted from what has gone before that so far the negative of the sound record and the negative of the picture record have been made upon separate strips or films. It is necessary, therefore, that these two negatives should be photographically printed upon one film or upon opposite sides thereof. In printing these records, the picture record would be printed as usual on one side of the moving picture film and fixed, the fixing solution however not being allowed to touch the other side of the film or strip. On the other side of the film there is a coating 4 of the substance before referred to which is impervious or opaque to infra-red rays, one such substance being very thin metallic silver. This substance which is opaque or impervious to the infra-red

rays is combined with gelatin or other suitable medium. After the picture side of the film has been printed, this coating 4 is sensitized by brushing on a solution having a proper proportion of bichromate of potassium or bichromate of ammonium. This sensitizes the gelatin and makes its sensitive to light for photographic action. This coating 4 could not be sensitized previously as in printing the pictures the sensitiveness of the coating 4 to light would be destroyed. The gelatin medium wherein the thin metallic silver for instance is carried, would simply act to hold this metallic silver or like substance and act as a transparent medium subject to the photographic action of light to thereby obtain a photographic record of the sound variations or sound record. The sound record which has been taken as previously described would be printed on the coating 4 of the film shown in Figs. 5 to 7 by means of ordinary light, ordinary light affecting the now sensitized gelatin, and after printing in this manner the face 4 of the film is soaked in water which dissolves the gelatin that has not been acted on by the light. This soaking of the film will leave and take off horizontal stretches of transparent gelatin extending across the film, and therefore leave or cut off the element or substance carried in the gelatin and which acts to cut off the infra-red rays. The horizontal stretches or lines of gelatin left upon the side 4 of the film correspond to the sound record.

Thus on one side of the film 2 there would be a picture record to be reproduced by means of ordinary light, which light passes uninterruptedly through the clear transparent gelatin while on the other side would be the sound record formed by bands of gelatin corresponding to alternate light and dark lines on the negative and adapted to be reproduced by means of infra-red rays which would pass readily through the entire film except where purposely cut off by the substance impervious to red rays contained in the gelatin left upon the film. It is reiterated that the white light would be entirely unaffected by passage through the coating 4 and that the infra-red rays while being affected by the coating 4 would be unaffected by the coating 3 containing the picture record.

Generally speaking, for the reproduction of the picture record and the sound record, ordinary white light is passed through the picture record while infra-red rays (invisible to the eye) are passed through the sound record and fall upon suitable instruments to be hereafter described whereby these infra-red rays will cause the reproduction of sound vibrations. There are a number of instruments that are sensitive to infra-red rays. The tasimeter invented by Thomas A. Edison will measure heat accurately [illegible] to the ten-thousandth part of one degree but this instrument is probably too slugg[illegible] for the purpose of reproducing sound record. The selenium cell when sensitized by Abney's process is sensitive to infra-red rays and may be used for the purpose. I believe, however, that the bolometer is best adapted for the purpose for several reasons, but principally because the element [illegible] which the light falls can be made so nearly to coincide with the small horizontal lines of the photographic sound record [illegible] width of the horizontal lines of the sound record would be regulated according to the speed of the film. Thus for instance [illegible] the Urban-Smith natural color film is used, these horizontal lines would be [illegible] on account of the greater operating speed of these natural color films.

In the reproducing apparatus such as hereafter described, infra-red rays are projected against the film containing the sound record and the picture record by suitable prisms such as prisms of rock salt, fluorite or Jena glass and focused through a narrow slit onto the film and after passing through the film fall on the reproducing instrument such as the bolometer. Connected [illegible] with the bolometer or through similar apparatus would be loud-speaking phones such as the auristophone, the Edison or the Baldwin receret loud-speaking phones.

Moving pictures are reproduced by intermittently moving the film. It is therefore plain that it would be impossible to use this film during its intermittent motion or at the point through which the white light rays are projected for the purpose of reproducing the sound record, it being plain that the sound record must be reproduced [illegible] was taken, namely, by a continuous movement of the film. I overcome this difficulty therefore by passing the infra-red rays through the film at a point on one side of the other of the point where the picture projecting rays are passing through, that is, at a point where the film is moving continuously and steadily.

An apparatus whereby the moving pictures may be projected and the sound record synchronously reproduced, is illustrated in Fig. 1. This figure shows an ordinary moving picture projecting apparatus comprising a table or base 26 supported in any suitable manner and supporting upon it the lamp housing 27 wherein there is disposed the ordinary right angle arc lamp 28 such as used in moving picture machines. Such a right angle arc is particularly adapted as a source of infra-red rays while supplying at the same time the ordinary white light for the pictures. The light is projected from the lamp housing in any usual suitable manner onto the film 2. This [illegible]

unrolled from an upper film reel and passes down through the usual moving picture projector 29. This mechanism contains means for intermittently shifting the film while the shutter of the mechanism is closed. Inasmuch as there are various types of this mechanism and it is thoroughly well known, it is not deemed advisable to describe the mechanism in detail.

The white light after passing through the film 2 at the point *a*, is projected onto a screen A in the usual manner. The film after it passes below the aperture plate of the moving picture machine no longer moves intermittently but is moved continuously and I have illustrated the film 2 as being passed around a series of rollers 30 and in front of the aperture of a selenium cell or like apparatus, this cell being designated 31. After passing in front of the aperture of the selenium cell the film 2 passes around a lower or receiving reel 32 which may be connected up with any suitable mechanism whereby the reel may be rotated continuously in a direction to wind up the reel 2 at a suitable rate of speed.

Disposed immediately below and in line with the meeting point between the carbons of the angular arc lamp 28, there are series of lenses 33. These lenses are preferably made of rock salt or fluorite. The infra-red rays passing through these lenses 33 are transmitted by means of prisms 33ª of Jena glass or other suitable material to the aperture of the selenium cell 31. A diaphragm 34 is so disposed as to cause these rays to fall in the form of an elongated narrow or transversely extending beam upon the face of the selenium cell 31. Preferably the lenses 32 and the prisms 33ª are contained within a casing or housing 35.

The selenium cell 31 is formed in any usual or suitable manner and requires no particular description as it is the ordinary form of cell except that preferably the cell is treated by Abney's process so as to make it extremely sensitive to the infra-red rays. Mounted behind the screen or in any suitable portion of the exhibition hall is a loud-speaking phone designated 36 in Fig. 1. This is a loud-speaking electric telephone and is connected in series by the wires 37 with the selenium cell 31.

The operation of the picture and sound reproducing apparatus illustrated in Fig. 1 is of course obvious. The pictures are reproduced in the usual manner, but after the strip or film has passed beyond the specific moving picture mechanism, the strip passes in front of the selenium cell and the transverse bands or lines of the sound record on the film will act to more or less intercept, absorb, reflect or otherwise stop or impede the passage of the infra-red rays. Where the infra-red rays fall with full force upon the selenium cell, the cell will have a certain degree of electrical resistance. Where the infra-red rays are intercepted or their intensity changed in any manner, the electrical resistance of the selenium cell will vary correspondingly. There will therefore be a constant variation of the electrical resistance of the cell as the record film passes in front of the cell, and this continual variation of resistance will, in a manner well known, affect the mechanism of the telephone transmitter 36 and thereby cause vibrations of the air corresponding to the sound vibrations and the sound will be reproduced. All of the mechanism heretofore described is well known by itself. The photophone operates on the same principle as the sound reproducing mechanism heretofore described, but using ordinary white light.

Inasmuch as sound reproductions may be secured by a large variety of electrical apparatus, affected by variations of rays falling upon it, I do not wish to be limited to the use of a selenium cell or any other specific apparatus for the purpose of translating the photographic sound records into air vibrations as any other mechanism having the same general function may be substituted for the selenium cell.

For purposes of illustration, I have shown in Figs. 9 and 10 two other forms of mechanism adapted to translate the vibrations of light rays into sound. Fig. 9 illustrates the bolometer as used for this purpose. The bolometer will measure heat accurately down to the ten-millionth part of a degree. In Fig. 9 38 and 39 indicate two thin platinum strips forming the two arms of a Wheatstone bridge normally in perfect balance. The infra-red rays passing through the film 2 in the form of a thin beam fall on one of these arms or strips, namely the strip 39. This disturbs the balance of the bridge. This Wheatstone bridge is connected as illustrated in the diagram to a telephone transmitter 40 which is the transmitter of any one of the loud-speaking phones previously referred to. The current passing through this transmitter will vary in correspondence with the variations of the red rays falling upon the strip 39 and therefore the photographic sound record will be reproduced as air vibrations. The action of this instrument is virtually instantaneous in its operation and extremely sensitive.

Fig. 10 is a diagram of the Edison tasimeter which may also be used for the purpose of translating photographic sounds into sound vibrations. In this figure 41 illustrates a rod of vulcanite supported against a fixed abutment at one end and at the other end abutting against a movable disk 42. This disk bears in turn against a carbon button 43 disposed between the movable disk 42 and a fixed disk of metal 42ª. The

two metal disks 42 and 42ª are connected in circuit to a loud-speaking phone the current passing more or less between the disks 42 and 42ª through the carbon button as it is compressed. The variations in these red rays cause this vulcanite to contract and expand thus compressing the carbon button 43 between the metal pieces 42 and 42ª, causing variations in the current corresponding to the variations in the strength of the rays.

While I have illustrated three forms of electrical sound reproducing apparatus, I wish it understood that I may use other forms. Thus I might use a thermopile, especially a "Bi-Ag," a selenium cell made sensitive to infra-red rays by Abney's process, or any other delicate heat measuring instrument of like character.

While in Fig. 1 and Figs. 9 and 10 I have shown only one telephone transmitter, this transmitter being shown in Fig. 1 as being disposed behind the screen A, it will be understood that with the electrical sound reproducing apparatus I may use a plurality of telephone transmitters disposed at various portions of an amusement hall, not only behind the screen but at the sides of the hall. This is obviously of great advantage and is not possible where ordinary sound reproducing mechanism is used.

Such an arrangement of phones is illustrated in Fig. 4 wherein the picture and sound projecting apparatus is designated 47 and illustrated diagrammatically, the picture being received upon the screen 48. As illustrated, there are three loud-speaking telephone receivers 49 disposed behind the screen 48 and a plurality of loud-speaking transmitters disposed along the side of the hall and facing toward the audience. Thus the sound reproduced may be distinctly heard by everybody in the audience. While I have illustrated in Fig. 4 all of the phones as being connected in one circuit and as being actuated by one selenium cell, bolometer or tasimeter, it is to be understood that when a film like that shown in Fig. 8 is used with two records placed in parallel position upon the film, a plurality of sets of sound reproducing apparatus is to be used. Thus with the film shown in Fig. 8 there will be two beams of infra-red rays projected through the film, each falling upon a separate bolometer, tasimeter or like apparatus, and each such reproducing mechanism being electrically connected to one of a series of sets of phonographic transmitters. By using the film shown in Fig. 8, a dialogue may be reproduced so that the sounds will issue from transmitters set at opposite sides of the hall or at opposite points behind the screen, thus causing the dialogue to seem more natural than if it apparently issues from one point only. It is obvious that a larger number of records could be placed upon the same film and thus the sounds be caused to issue from a plurality of points behind the screen or around the hall.

The two main features of my invention upon which the invention is based are in the first place the provision of a film capable of receiving not only the photographic prints of the pictures to be projected, but also the photographic record of the sound and the use with these films of invisible rays for the purpose of reproducing the sound record. The other important and vital feature of my invention resides in the provision of means whereby the sound record may be taken from that portion of the film which is moving continuously while that part of the film through which the rays of white light are projected is moved intermittently.

In printing the sound record upon the strip or film 2, the sound record is started a sufficient distance beyond the starting point of the picture record so that at the instant that any one event is being projected on the line x, the sound record corresponding to this event is passing the axis of line Z. Inasmuch as in taking or making the picture record and the sound record two separate negative films or strips are used, it is entirely possible in printing these records upon the film 2ª to displace the sound record with relation to the picture record in the manner stated. While I have shown the axis Z of the infra-red beam as being about twelve inches below the axis x of the white light beam, I wish it understood that the two axes may be much nearer than this and that the drawing in Fig. 1 is purely illustrative in this regard, and further that I may pass the infra-red rays through the strip 2ª above the picture projecting mechanism and above the axis x.

While I have referred to the lenses and prisms for focusing and transmitting the invisible rays as being made of rock salt, or Jena glass, it is of course obvious that they may be made of other material such as fluorite, or that I may use metallic reflectors for deflecting the invisible rays along the line Z.

By using a film having thereon a plurality of sound records, great naturalness could be secured as before stated by the fact that the transmitters translating the variations in the sound record into sound vibrations, could be located nearer to or farther from the inner side of the screen, or could be located on opposite lateral sides of the screen or stage so that the voices will apparently be projected in accordance with the positions of the actors in the moving picture. It is obvious also that in place of using a camera having a megaphone for transmitting sounds to the "speaking arc" or the manometric flame, sensitive microphone

transmitters might be used at various portions of a stage upon which actors were acting a moving picture play, and that the vibrations of these microphones could be transmitted electrically to diaphragms placed within a camera to thereby transmit the sounds proceeding from the several microphones to the several flames or speaking arcs to be recorded in separate columns upon the sound record film.

In Fig. 11 I show diagrammatically a "Bi-Ag" thermopile as above referred to. As this thermopile is well-known an extended description is not necessary. The thermopile consists of a frame 50 having an opening at its middle and extending across this opening are a plurality of couples 52 composed of connected bismuth and silver wires. These couples are joined by overlapping plates of tin, the junctions formed by the plates being covered with platinum black. The frame 50 with its couples of platinum and silver is supported inside of a casing 51 having a narrow slit through which the infra-red rays are projected upon the junction plates. The couples of silver and bismuth are connected in circuit with a receiver of a loud-speaking telephone in the manner heretofore described. A thermopile of this character is fully described in Bulletin No. 4 issued by the Bureau of Standards on Instruments and Methods of Radiometry. Therefore no extended description of the thermopile is necessary.

In case the talking picture machine before described is desired to be used in very large theaters where it would take a sound a perceptible time to travel the distance and where it would be possible to see the picture, therefore, before hearing its corresponding sound, the following arrangement could be made. After the system has been brought to a standard the instrument sensitive to the infra-red rays would always be just a certain distance from the lens or just a certain number of pictures below the lens. In a large theater, therefore, it would be only necessary to slightly advance the instrument, that is, move it a bit nearer to the lens, in which case the sound of a given event would slightly precede the picture but the sound would reach the observer at the same time that the picture was shown.

What I claim is:

1. A composite picture and sound recording film having on one side thereof a series of consecutive picture records and on the other side thereof a corresponding photographic sound record, the records being in overlapped relation.

2. A composite picture and sound recording film having on one side a series of consecutive pictures formed to permit the passage of invisible light rays without affecting said rays and on the other side thereof a corresponding photographic sound record formed to permit the passage of visible rays but to intercept or affect the passage of invisible rays, the records being in overlapped relation.

3. A composite picture and sound recording film having in conjunction a series of consecutive pictures adapted to permit the passage of invisible light rays and having in conjunction therewith a corresponding photographic sound record adapted to permit the passage of invisible light rays, the records being in overlapped relation.

4. A composite picture and sound recording film having on one side a series of consecutive pictures adapted to permit or affect the passage of visible rays of white light and having on the other side and superposed upon the pictures a corresponding photographic sound record adapted to permit the free passage of rays of visible light but to intercept or affect the passage of rays of invisible light.

5. A composite picture and sound recording film having thereon a series of consecutive pictures adapted to affect or intercept the passage of rays of visible light and on the other side a corresponding photographic sound record adapted to intercept or affect the passage of infra-red rays, the records being in overlapped relation.

6. A composite picture and sound recording film for moving picture talking machines, of transparent material having on one side a picture record affecting rays of ordinary visible light but not affecting invisible light rays and on the other side a sound record permitting the passage of ordinary visible light but affecting or intercepting the passage of invisible light rays, the records being in overlapped relation.

7. A composite picture and sound recording film for moving picture talking machines having on one side a series of consecutive pictures intercepting or affecting the passage of white and visible light and having on the other side and extending entirely across the film a photographic sound record formed of a substance permitting the free passage of ordinary white light rays but affecting or intercepting the passage of invisible light rays.

8. A sound recording film having thereon a photographic medium and a medium adapted to cut off, intercept or otherwise affect rays of invisible light, the mediums being in overlapped relation.

9. A sound recording film having thereon a photographic sound record composed of a substance having a high percentage of water of crystallization or a high percentage of water of constitution, a high percentage of selective reflection or a high percentage of selective absorption.

10. A photographic sound record com-

prising a transparent film having thereon a sensitive coating comprising a substance having a high percentage of water of crystallization or a high percentage of water of constitution, a high percentage of selective reflection or a high percentage of selective absorption, and a medium carrying said substance and subject to the photographic action whereby the sound records may be photographically obtained.

11. A sound reproducing and moving picture film of material transparent to visible and invisible light having on one side a picture record and on the other side a photographic sound record, the picture record being of material permitting the free passage of light rays beyond or below the visible spectrum but intercepting or affecting light rays proceeding within the visible spectrum, the sound record being formed of material permitting the free passage of visible light rays but affecting or intercepting the passage of rays beyond the visible light spectrum, the records being in overlapped relation.

12. The method of producing a motion picture and sounds corresponding to the action of the pictures which consists in passing rays of visible light and invisible light rays separately through a film, one side of said film being provided with photographic picture records acting to affect rays of visible light but not affecting invisible light rays, the other side of said film having superimposed thereon a photographic sound record of a substance which will affect invisible light rays but will not affect the visible light rays, causing the film to move at one point intermittently and at another point continuously, causing the rays of visible light to pass through the intermittently moving portion of the film and the invisible rays to pass through the steadily moving portion of the film, and translating the variations in the invisible light rays into sound vibrations.

13. A film for use in reproducing pictures and sound in synchronism having thereon a plurality of photographic records, each adapted to intercept or affect a certain class of light rays and permit rays of another class to pass unimpeded therethrough, each record intercepting or affecting that class of light rays which is permitted by the other record to pass freely, the records being in overlapped relation.

14. A film for use in reproducing pictures and sound in synchronism having thereon a plurality of superimposed photographic records, each adapted to intercept or affect a certain class of light rays and permit rays of another class to pass unimpeded therethrough, each record intercepting or affecting that class of light rays which is permitted by the other record to pass freely, the records being in overlapped relation.

15. The method of reproducing a plurality of different records from a single moving film, consisting in moving a film across the paths of a plurality of different classes of light rays, said film having thereon a plurality of superposed records, each of said records affecting or being more or less opaque to the passage of a certain class of light rays but permitting the free passage of another class of light rays, the rays permitted to pass by one record being of another set or class from those permitted to pass by any other record.

16. A composite picture and sound recording film having on one side thereof a photographic record and on the other side a photographonic record, the records being overlapped.

17. A composite picture and sound recording film having opposed photographic and transparent photographonic records.

18. A composite picture and sound recording film having opposed surfaces sensitized for the individual impression thereon of photographic and photographonic records.

19. A negative film for the negative impression of picture and sound records having its opposed surfaces sensitized one for the photographic impression of a picture and the other sensitized for the photographonic impression of a related sound, the sensitized medium of the last-mentioned surface of the film being pervious to visible light rays.

20. A positive film for the reproduction of picture and sound records having upon one surface a positive picture record pervious to invisible light rays and provided upon its other surface and directly opposite the picture record with a positive sound record pervious to visible light rays and more or less impervious to invisible light rays.

In testimony whereof I affix my signature in presence of two witnesses.

RICHARD M. CRAIG. [L. S.]

Witnesses:
G. M. Book,
G. H. Shiner.

O. MESSTER.

METHOD OF EXHIBITING THE MOVEMENTS OF ORCHESTRA CONDUCTORS.

APPLICATION FILED MAR. 25, 1914.

1,286,383. Patented Dec. 3, 1918.

Fig. 1.

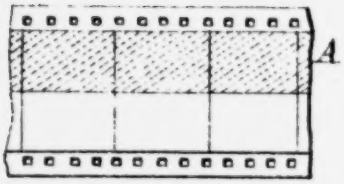

Fig. 2.

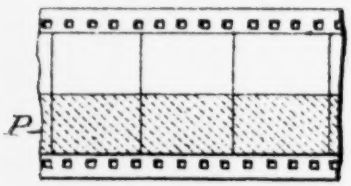

Fig. 3.

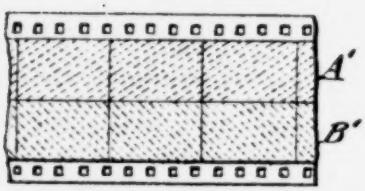

Fig. 4.

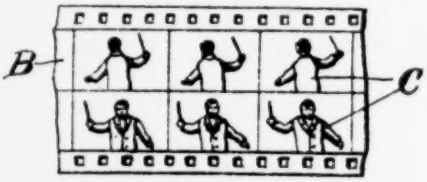

Fig. 4a

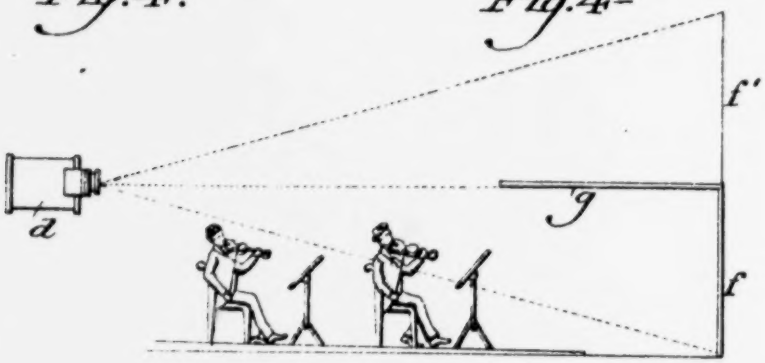

Fig. 5.

INVENTOR

Oskar Messter

BY Wiedersheim & Fairbanks.

ATTORNEYS

UNITED STATES PATENT OFFICE.

OSKAR MESSTER, OF BERLIN, GERMANY.

METHOD OF EXHIBITING THE MOVEMENTS OF ORCHESTRA CONDUCTORS.

1,286,383. Specification of Letters Patent. Patented Dec. 3, 1918.

Application filed March 25, 1914. Serial No. 827,023.

To all whom it may concern:

Be it known that I, OSKAR MESSTER, a German subject, residing in Berlin, No. 32 Blücherstrasse, Germany, have invented new and useful Improvements in Methods of Exhibiting the Movements of Orchestra Conductors, of which the following is a specification.

The subject of my invention is a method of conducting an orchestra without a conductor being present in person.

My invention consists, broadly, in replacing the person of the conductor by cinematographic representation so that the musicians as well as the hearers will see the so represented conductor as he would appear when personally present, that is the cinematographic representations shall be such that the represented conductor will have his back to the audience and his face to the orchestra, thereby rendering the exhibition more realistic.

This is necessary in order that the same effect be obtained as the conductor in person produces in concert rooms. The invention is important for the reproduction of the art of conducting possessed by famous conductors, such art thus being enabled to be communicated to the remotest posterity. In a concert room my new method will insure a perfectly esthetic impression on the audience, as the conductor will be represented at the usual place and in the usual manner, that is, with his back to them so that they will not be influenced by the expression of his face. The musicians also will see him at the usual place and recognize at the picture the tempo indicated by the conductor and the signals given by him for striking-in, intonation, &c.

An artistic moment will particularly be produced by the picture showing the expression of the conductor's face in the same manner as if he were personally present, a suggestive influence on the musicians being thus brought about to affect their playing. The members of the orchestra can, therefore, play in accordance with the conductor's individual interpretation of the tempo, the dynamical modulation and the color of tone being produced in accordance with his interpretation.

My invention will be fully understood from the accompanying drawing in which—

Figure 1 is a diagrammatic plan of an arrangement adapted for producing the films provided with the pictures of an orchestra conductor; Figs. 2, 3, and 4 are diagrammatic views of a film thus produced and shown in different stages of completion; Fig. 4^a represents the film ready for use; Fig. 5 is a diagrammatic elevation of an arrangement for projecting the films thus obtained.

As shown in Fig. 1, the conductor, indicated at *a*, is cinematographically taken in front and back views simultaneously, by means of two cinematographs *b*, b^1 driven synchronously. Both cinematographs are to be covered by screens *c*, c^1, in order that they do not appear in the pictures produced. Their objectives, however, must remain uncovered for obvious reasons.

A film is used for each cinematograph and is passed in a horizontal direction therethrough, the pictures produced on it taking up half the width thereof, as shown in Figs. 2 and 3. Two rows of pictures, A and B, will thus be obtained, which are then so copied, by means of a well-known process, that a film having two adjacent rows of pictures A^1, B^1 will result, as shown in Fig. 4. One of such rows of pictures comprises the back representations of the conductor, the other row the front representations, the individual pictures, produced synchronously as stated, being so disposed on the film shown in Fig. 4 that beside each back picture there is the appertaining front picture of the conductor. In Fig. 4^a, the film is portrayed as being ready for use, B designating the body of the film and C designating the different positions of the conductor.

In order to show the pictures to the audience and musicians in the correct positions, one of the cinematographic productions must be made by means of a reflector or the like.

On reproduction the two rows of pictures are, by means of a cinematograph *d* disposed in the orchestra room, so projected on a projection wall D, one of them lying below the other, that on the lower portion *f* of this wall the pictures of that row will appear which comprises the front representations of the conductor, and the conductor will apparently appear as usual to the members of the orchestra arranged in a suitable or convenient manner below the screen *g*. To this end the film illustrated at Fig. 4 is passed in a horizontal direction through the apparatus. The portion *f* of that portion of the projection wall D is not transparent,

and consequently the audience will not see the row of the pictures comprising the front representations of the conductor. The upper portion f^1 of the wall D is translucent, so that the audience will see the pictures of the upper row which comprises the back representations of the conductor.

The screen g is disposed horizontally or nearly so, so that the pictures of the upper row, which are to be shown to the audience only, are rendered invisible to the musicians and cannot disturb them therefore.

The front and back representations of the conductor can also be produced immediately beside each other on the same film, by the use of particular reflectors and of only one cinematograph; then a positive film may be obtained by copying and be exhibited in the manner described. Two separate apparatus could also be used to exhibit each a row of pictures. In such case one of the cinematographs is behind the audience and is employed to reproduce the back representations of the conductor, while the other cinematograph, again placed in the orchestra room, is merely used to show his front representations. In such case, of course, both cinematographs must be moved synchronously, and the portion f^1 of the wall D is not translucent. For such a projection the pictures produced may take up the whole width of each film. In order to observe exactly the tempo indicated by the conductor it will be necessary that the apparatus used for taking the pictures and those employed for the reproduction thereof be fitted with a device which will insure a perfectly equal motion of these apparatus. Recording tachometers may preferably be used to such end, or the apparatus may be connected to a needle instrument which is to continuously correspond to the motion of the seconds hand of a clock during the said production and reproduction. The taking of the pictures is of course to be repeated if such indicating devices show differences as regards velocity.

It is to be understood that my invention is in no wise restricted to the embodiments illustrated or referred to, but that modifications may be made within the scope indicated by the appended claims, without departing from the spirit or sacrificing any of the advantages of this invention.

What I claim is:—

1. The method of exhibiting the movements of an orchestra conductor, which consists in first producing front and back cinematographic representations of the conductor, and then simultaneously exhibiting the front representations to the orchestra and the back representations to the audience.

2. The method of exhibiting the movements of an orchestra conductor, which consists in first simultaneously producing front and back cinematographic representations of the conductor, and then simultaneously exhibiting the front representations to the orchestra and the back representations to the audience.

In witness whereof I have hereunto signed my name this twenty-sixth day of February, 1914, in the presence of two subscribing witnesses.

OSKAR MESSTER.

Witnesses:

HENRY HASPER,

WOLDEMAR HAUPT.

April 8, 1924.

1,489,314

L. DE FOREST

RECORDING SOUND

Filed July 16, 1921

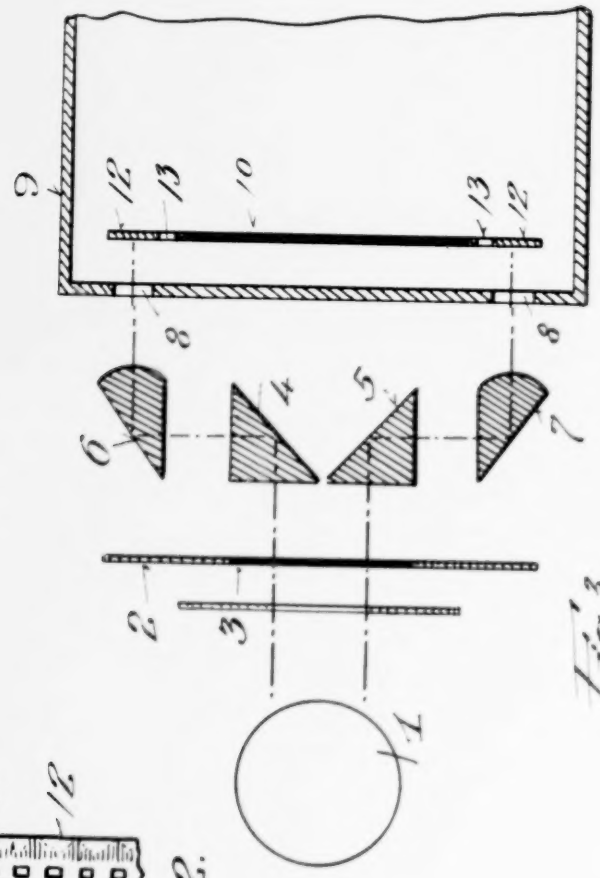

Fig. 3.

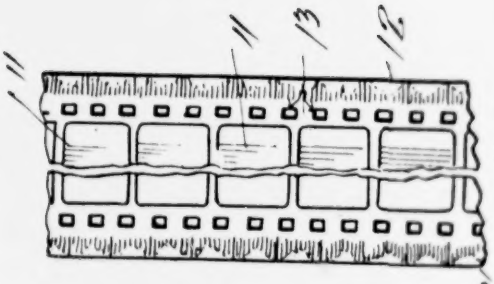

Fig. 2.

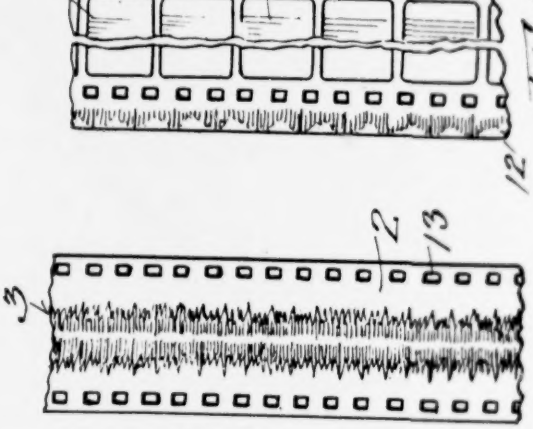

Fig. 1.

INVENTOR

Lee de Forest

BY his ATTORNEYS Darby & Darby

Patented Apr. 8, 1924. 1,489,314

UNITED STATES PATENT OFFICE.

LEE DE FOREST, OF NEW YORK, N. Y., ASSIGNOR, BY MESNE ASSIGNMENTS, TO DE FOREST PHONOFILM CORPORATION, OF JERSEY CITY, NEW JERSEY, A CORPORATION OF DELAWARE.

RECORDING SOUND.

Application filed July 16, 1921. Serial No. 485,332.

To all whom it may concern:

Be it known that I, LEE DE FOREST, a citizen of the United States, residing in the city of New York, county and State of New York, have made a certain new and useful Invention in the Art of Recording Sound, of which the following is a specification.

This invention relates generically to the art of recording sound and more specifically where such record is obtained photographically for use in connection with photographic sound records such as films or the like, and is especially adaptable for use in connection with the art of motion picture photography.

The object of the invention is to provide means which are simple, economical and efficient for photographing sound record on films.

A further object of the invention is to provide means which are highly effective for accurately recording sounds on the marginal edges of a standard motion picture film.

Further objects of the invention will appear more fully hereinafter.

The invention consists substantially in the construction, combination, location and relative arrangement of parts and the method employed in connection therewith, all as will be more fully hereinafter set forth, as shown by the accompanying drawing and finally pointed out in the appended claims.

Figure 1 is a fragmentary view of a sound record embodying the principles of my invention.

Fig. 2 is a similar view showing the sound record applied to the marginal edge of the motion picture film in accordance with my invention.

Fig. 3 is a diagrammatic view illustrating the principle involved in recording the sound waves photographically, in accordance my invention, on the marginal edge of a standard motion picture film.

The same part is designated by the same reference character wherever it occurs through the several views.

In my co-pending application, Serial No. 391,705, filed June 25, 1920, I show and describe methods for photographing sound-inside the intermittent feed perforations of the said film.

I find that if the original photographs of such sound-controlled light fluctuations be made large so that the width of the maximum amplitude of such photographic track be, say one-half inch or more, a more exact and faithful photograph containing any details of the finest light variations produced by sound waves will be obtained. For use as a sound record per se this type of record is satisfactory, but as is readily apparent it would be too large a record to use in connection with a motion picture film unless used independently therefrom and therefore necessitating the various problems of synchronism which have always been considered, and still are considered to be the objectionable problems in this art. In accordance with my invention, however, I produce the large, accurate and definite sound record on a film, for example, as shown in Fig. 1, and therewith reduce photographically the record thus obtained and print the same on one or both marginal edges of the motion picture film as shown in Fig. 2.

In the production of the photographic sound record of Fig. 1 it will be observed that the record is symmetrical on both sides of the axis thereof and it will readily be apparent that a highly effective and efficient record can be obtained by photographing the record contained on opposite sides of the axis thereof, on the marginal edge. This is accomplished, in accordance with my invention, in the manner illustrated in Fig. 3 wherein the sound record film 2 containing thereon the sound record 3 is passed between a light source 1 and 2 and prisms 4 and 5 so arranged that the sound record on one side of the axis of the film 2 is reflected in one direction and the record on the other side of the film is reflected in the opposite direction by means of the prisms 4 and 5. It will, of course, be understood that it is the light rays affected by the sound record 3 that are reflected by the respective prisms 4 and 5. The reflected light rays are again reflected by prisms 6 and 7 to direct the same in parallel lines through orifices 8 in the casing 9

April 8, 1924. 1,489,314

L. DE FOREST

RECORDING SOUND

Filed July 16, 1921

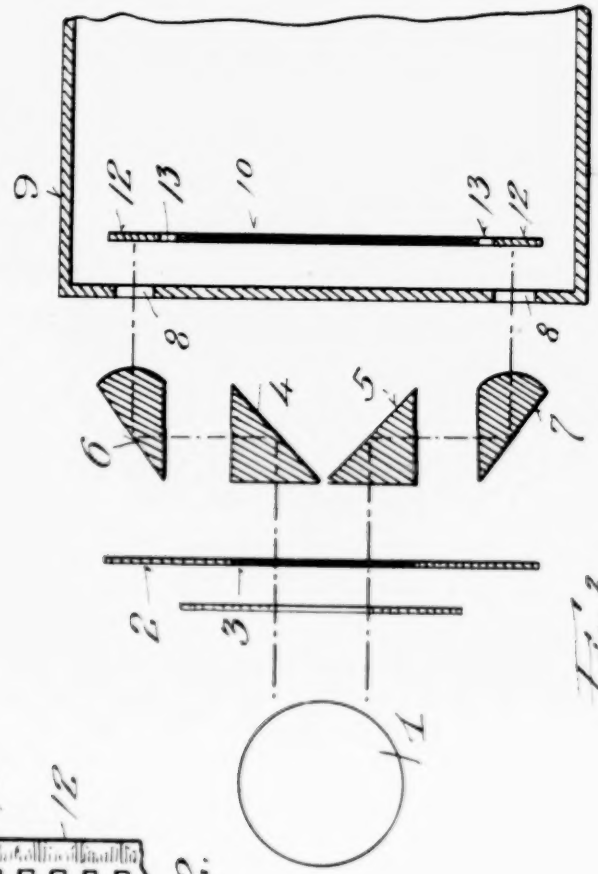

Fig. 3.

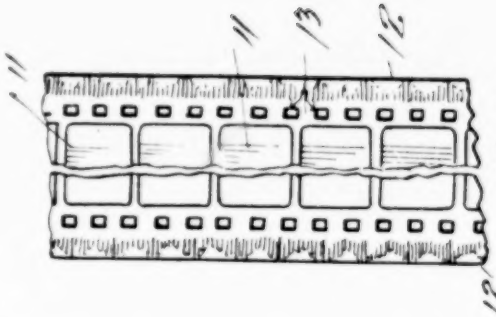

Fig. 2.

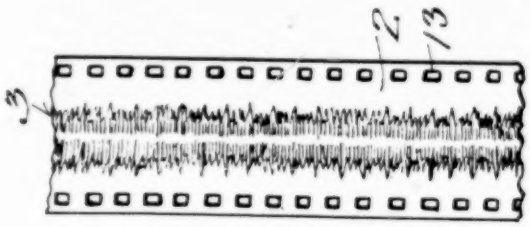

Fig. 1.

INVENTOR

Lee de Forest

BY his ATTORNEYS Darby & Darby

Patented Apr. 8, 1924.

UNITED STATES PATENT OFFICE.

LEE DE FOREST, OF NEW YORK, N. Y., ASSIGNOR, BY MESNE ASSIGNMENTS, TO DE FOREST PHONOFILM CORPORATION, OF JERSEY CITY, NEW JERSEY, A CORPORATION OF DELAWARE.

RECORDING SOUND.

Application filed July 16, 1921. Serial No. 485,332.

To all whom it may concern:

Be it known that I, LEE DE FOREST, a citizen of the United States, residing in the city of New York, county and State of New York, have made a certain new and useful Invention in the Art of Recording Sound, of which the following is a specification.

This invention relates generically to the art of recording sound and more specifically where such record is obtained photographically for use in connection with photographic sound records such as films or the like, and is especially adaptable for use in connection with the art of motion picture photography.

The object of the invention is to provide means which are simple, economical and efficient for photographing sound record on films.

A further object of the invention is to provide means which are highly effective for accurately recording sounds on the marginal edges of a standard motion picture film.

Further objects of the invention will appear more fully hereinafter.

The invention consists substantially in the construction, combination, location and relative arrangement of parts and the method employed in connection therewith, all as will be more fully hereinafter set forth, as shown by the accompanying drawing and finally pointed out in the appended claims.

Figure 1 is a fragmentary view of a sound record embodying the principles of my invention.

Fig. 2 is a similar view showing the sound record applied to the marginal edge of the motion picture film in accordance with my invention.

Fig. 3 is a diagrammatic view illustrating the principle involved in recording the sound waves photographically, in accordance my invention, on the marginal edge of a standard motion picture film.

The same part is designated by the same reference character wherever it occurs through the several views.

In my co-pending application, Serial No. 391,705, filed June 25, 1920, I show and describe methods for photographing sound-produced fluctuations of a source of light upon one or both margins of a standard motion picture film either outside or directly inside the intermittent feed perforations of the said film.

I find that if the original photographs of such sound-controlled light fluctuations be made large so that the width of the maximum amplitude of such photographic track be, say one-half inch or more, a more exact and faithful photograph containing any details of the finest light variations produced by sound waves will be obtained. For use as a sound record per se this type of record is satisfactory, but as is readily apparent it would be too large a record to use in connection with a motion picture film unless used independently therefrom and therefore necessitating the various problems of synchronism which have always been considered, and still are considered to be the objectionable problems in this art. In accordance with my invention, however, I produce the large, accurate and definite sound record on a film, for example, as shown in Fig. 1, and therewith reduce photographically the record thus obtained and print the same on one or both marginal edges of the motion picture film as shown in Fig. 2.

In the production of the photographic sound record of Fig. 1 it will be observed that the record is symmetrical on both sides of the axis thereof and it will readily be apparent that a highly effective and efficient record can be obtained by photographing the record contained on opposite sides of the axis thereof, on the marginal edge. This is accomplished, in accordance with my invention, in the manner illustrated in Fig. 3 wherein the sound record film 2 containing thereon the sound record 3 is passed between a light source 1 and 2 and prisms 4 and 5 so arranged that the sound record on one side of the axis of the film 2 is reflected in one direction and the record on the other side of the film is reflected in the opposite direction by means of the prisms 4 and 5. It will, of course, be understood that it is the light rays affected by the sound record 3 that are reflected by the respective prisms 4 and 5. The reflected light rays are again reflected by prisms 6 and 7 to direct the same in parallel lines through orifices 8 in the casing 9, in which the motion picture film 10, either exposed as to the picture spacing 11 thereof and unexposed as to the marginal edge

thereof or unexposed as to its entire surface, is located. Means are provided to reduce, in size, the sound record 3 contained on its film 2, to the necessary size to be accurately and completely recorded on the marginal edges 12 of the film 10. This means may comprise suitable lenses or preferably a combination of a convex lens with the prisms 6 and 7, as shown. By means of this arrangement it will readily be apparent to those skilled in the art that the large, clear, distinct sound record 3 contained on its film 2 may be accurately reproduced in smaller, but nevertheless complete detail on one or both marginal edges 12 of the motion picture film, to thereby enable utilization of the space of the film contained between the intermediate feed perforations 13, and the edge or edges thereof.

It will also be readily apparent to those skilled in the art that by suitable location of the prisms 4, 5, 6, 7, and the orifices 8 of the casing 9, the reproduction of the sound record may be effected on any other desired part of the film. By suitable variation in the form of the prisms 6 and 7, or the utilization of suitable lenses, the original sound record may be reduced in size, reproduced as of the same size or enlarged, as desired.

Many other modifications and changes in details will occur to those skilled in the art without departing from the spirit and scope of my invention as defined in the claims, but having now set forth the objects and nature of my invention, and having shown and described structures embodying the principles thereof and illustrating the method employed in accordance therewith, what I claim as new and useful, and of my own invention, and desire to secure by Letters Patent, is:—

1. The method of producing talking moving pictures on the same film which comprises photographing simultaneously upon separate films the picture and the sound, and photographing the sound record on an unexposed portion of the picture film.

2. The method of producing talking moving pictures on the same film which comprises photographing simultaneously upon separate films the picture and the sound, reducing the size of the record, and photographing the reduced sound record upon an unexposed portion of the picture film.

3. The method of producing talking moving pictures on the same film which comprises photographing simultaneously upon separate films the picture and the sound, and photographing the sound record on an unexposed portion of the picture film between the marginal edge and the sprocket perforations thereof.

4. The method of producing talking moving pictures on the same film which comprises photographing simultaneously upon separate films the picture and the sound, reducing the size of the record, and photographing the reduced sound record upon an unexposed portion of the picture film between the marginal edge and the feed sprocket perforations thereof.

In testimony whereof I have hereunto set my hand on this 14th day of July, A. D. 1921.

LEE DE FOREST.

[Second Edition.]

N° 21,467 A.D. 1909

(Under International Convention.)

Date claimed for Patent under Patents and Designs Act, 1907, being date of first Foreign Application (in Italy), 7th June, 1909

Date of Application (in the United Kingdom), 20th Sept., 1909

Accepted, 24th Feb., 1910

COMPLETE SPECIFICATION.

Improvements in or relating to Cinematograph Films.

I, CARLO ROSSI, Manufacturer, of Via Madama Cristina, 85, Turin, Italy, do hereby declare the nature of this invention and in what manner the same is to be performed, to be particularly described and ascertained in and by the following statement:—

This invention relates to a cinematograph film on which two or more scenes are reproduced, and to the means for printing the same.

It has already been proposed to arrange on cinematograph films the photograms with their height perpendicular to the axis of the film, and it is also known to arrange two or more series of photograms on one and the same film, but there is a difficulty in using such multiple films owing to the very reduced size of the photogram if the film is to retain its ordinary width (*i.e.* 25 mm. of useful width).

On the contrary, according to this invention it is possible to obtain, on a film of ordinary width, two scenes allowing a very good projection with the screens generally used, because the photograms are arranged with their height normal to the axis of the film, that is succeeding each other at the side of each other instead of at the base of each other, as it is done at present.

In such a way the photograms result having a height of $12\frac{1}{2}$ mm., and a width of 19 mm., with the advantage that ordinary apparatus can be used with a film of this kind for taking views, and for printing and projecting the ordinary films, because each step of intermittent feeding movement of the film is, as at present, of 19 mm.

It is thus possible to obtain a positive film on which two different scenes are obtained, one for each series of photograms succeeding each other at the side of each other for the purpose of reducing the cost of each scene, whilst keeping the present width of the film, which is the most suitable width for its manipulation.

For this purpose a negative of the scene is to be taken, by an object glass having a diameter adapted to give a height to the photograms which is a fraction of the useful width of the film and by means of that negative the positive film is printed by contact, on which the series of photograms constituting the scene will occupy a corresponding fraction of the width of the film, whilst on the free portion of the said positive film another scene or scenes will be subsequently printed by means of other negatives.

In that way, the length of the negative film required would be the same as at present, but on one and the same length of positive film two or more scenes can be obtained instead of one only.

It is also possible to utilise an ordinary negative film, that is to say, having its photograms with the height in the direction of the axis of the film, the photograms having then to be printed on the positive film with their height in the direction perpendicular to the axis of the film and of a width corresponding only to a fraction of the useful width of the film, the printing cannot be done by contact, but it is necessary either to advance, in the apparatus for printing, the negative and the positive films in directions perpendicular to each other, with the interposition of a device for reducing the size of the images, or to advance the negative and positive films in parallel directions with the interposition of a device for reducing the images and turning them round their centre to an angle of 90°.

In both cases, a complete scene will be printed first for instance on the upper half of the positive film, and afterwards another different scene will be printed on the lower half of the same film, in such manner that the photograms will succeed each other at the side of each other in the same or in opposite directions in both scenes. In the latter case, the images of the photograms of the two different series will be reversed, and the second scene will be projected the film being reversed in the apparatus.

In the accompanying drawings:—

Figure 1 shows a negative film, with an impression only on the upper half by means of which the upper half of a positive film can be printed;

Figure 2 shows a negative film with an impression only on the lower half;

Figure 3 shows the positive film printed by means of the two preceding negative films.

Figures 4 and 5 show two methods of printing a scene on the half of a positive film by means of an ordinary negative; and

Figure 6 shows a positive film on which the different scenes proceed in opposite directions.

It will be understood that, in order to obtain the film shown in Figure 3, the two negative films shown in Figures 1 and 2 can be printed one after another, whilst in order to obtain the film shown in Figure 6, two negative films with an impression on the upper half of both of them could be utilised by reversing the positive film so that the printing on the lower half could be effected.

According to the method shown in Figure 4, two ordinary negative films are successively printed on one and the same positive film, it is only necessary to advance the negative film *a* vertically and the positive film *b* horizontally, with the interposition of a device for reducing the size of the photograms, each series of which has to occupy only half the width of the positive film.

According to the method shown in Figure 5, the negative film *a* and the positive film *b* advance parallel to each other in the same or in opposite directions. It is required in this case to arrange between the two films an object glass *c* for reducing the size of the image, and provided with a system of prisms *d* for turning them round their centre to an angle of 90°.

In the case of the film according to Figure 3, in order to project the scene occupying the lower half of the film, after the projection of the other scene, it is necessary to bring the projecting object glass, which was in the position I (see Figure 3), into the position II, whilst in the case of a film according to Figure 6, the object glass will not be touched, and the position of the film will be reversed.

With the film according to the Figure 6, there is the advantage that, during the projection of two different scenes, the film must advance in opposite directions, so that the perforations wear out on one edge as well as on the opposite one, that is to say, the perforations wear out in the same way as do in the ordinary films carrying a single scene.

There is the further advantage that the film has not to be wound again for

bringing to the outside the end which was inside the spool after the projection (as it is done at present) but it will suffice to reverse the spool before commencing the projection of the second scene.

The other conditions of manipulation and of wear being equals, there is the advantage of obtaining with one and the same surface of positive film two scenes instead of only one.

During the projection, the film could be advanced horizontally or vertically, the images being turned round their centre by means of prisms or other suitable arrangements.

Having now particularly described and ascertained the nature of my said invention, and in what manner the same is to be performed, I declare that what I claim is:—

1. A multiple cinematograph film in which two or more series of photograms are arranged with their height perpendicular of the axis of the film, the several series of photograms bearing different scenes and being uniformly arranged with regard to each other, or inverted.

2. A method of printing a multiple cinematograph film of the kind set forth in Claim 1, consisting in obtaining a negative film with an impression only on a fraction of its width corresponding to the fracton of width of the film on which the scene is to be reproduced the printing being effected by contact, whilst the other portion of the film will be occupied by other scenes printed in the same manner by other negative films with only a partial impression.

3. A method of printing a multiple film of the kind set forth in Claim 1, consisting in using ordinary negative films, the negative and the positive films being caused to advance in the machine, so as to obtain positive photograms arranged with their height perpendicular to the axis of the positive film, and of such size as to occupy only a fraction of the useful width of the said film.

4. A method of printing a multiple film of the kind set forth in Claim 1, consisting in using ordinary negative films, the negative and the positive films advancing in the machine for printing, in parallel directions, with interposition of a system for reducing and erecting the images, for the purpose of obtaining on the positive film photograms arranged with their height perpendicular to the axis of the film and of such size as to occupy only a portion of the useful width of the posit ve film.

Dated this 18th day of September, 1909.

BOULT, WADE & TENNANT.
111/112, Hatton Garden, London, E.C.,
Chartered Patent Agents.

A.D. 1909 Sep. 20. N° 21,467.

ROSSI'S Complete Specification.

(2nd Edition)

Fig. 1

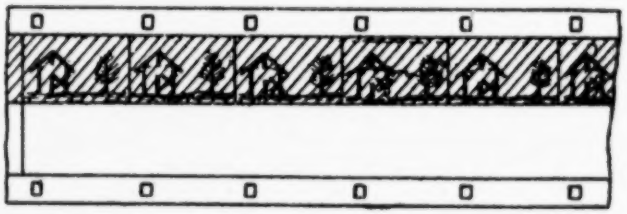

Fig. 2

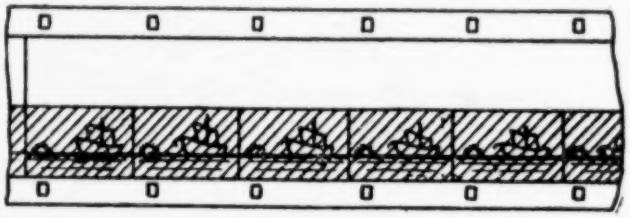

Fig. 3

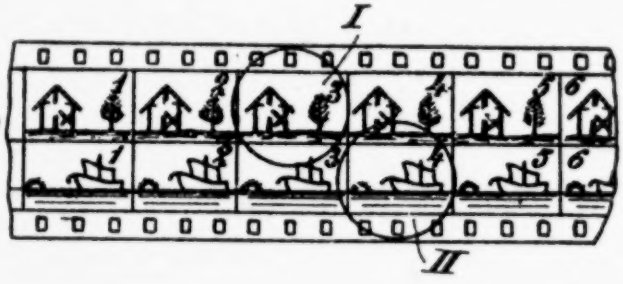

Fig. 4

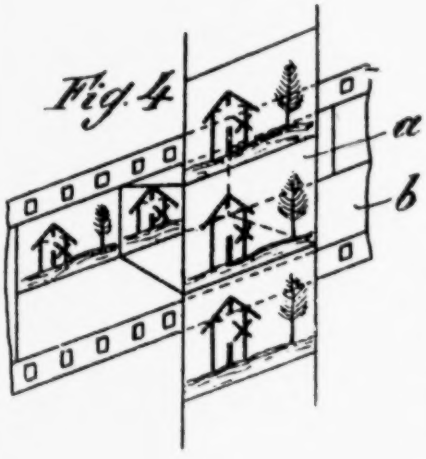

Fig. 5

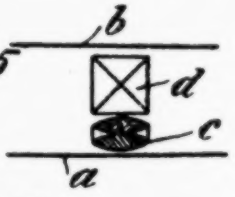

Fig. 6

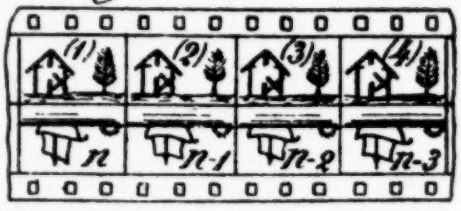

[This Drawing is a reproduction of the Original on a reduced scale]

Malby & Sons Photo Litho

[Fourth Edition.]

N 23,620 A.D. 1911

Date of Application, 25th Oct., 1911.

Complete Specification Left, 25th Apr., 1912—Accepted, 24th Oct., 1912.

PROVISIONAL SPECIFICATION.

Improved Means of Simultaneously Recording or Reproducing Sound and Visible Movements Accompanying such Sounds.

I, AUGUSTUS ROSENBERG, of 259, High Holborn, London, W.C., Engineer, do hereby declare the nature of this invention to be as follows :—

My invention relates to a system of phono-kinematography, that is to say a method and means whereby on the one hand to obtain, together with a kinematographic record of the visual appearance of a continuous train of incidents, a record of the sounds accompanying said incidents, and whereby on the other hand to effect the scenic simulation of reality by the presentation, along with a kinematographic reproduction of such visual appearance, of an auditory reproduction of the sounds recorded.

The perfection of the result attained is primarily dependent upon absolute synchronism and correct registration between the kinematographic reproduction of the actions recorded and the auditory reproduction of the sounds which accompanied those actions : such synchronism, again, necessitating the sound-record being obtained simultaneously with the picture-record. The completeness of the illusion is, further, dependent upon the communication to the spectator of an impression of constant coincidence between the actual and the visually-apparent sources of the sounds as reproduced. Moreover, the successful representation of scenes or incidents occupying any considerable extent of ground or floor area involves the recording of sounds emitted at all parts of the space wherein the action takes place, so that (for example) a speaker or singer shall not be under the necessity of remaining in close proximity to (or otherwise in some narrowly restricted position or attitude with reference to) any device which may be employed for the purpose of picking up and transmitting to the recording instrumentality the words uttered or sung.

In describing my invention, which has for its object to provide a method and means whereby these ends may be attained, I will first deal more particularly with the maintenance of proper synchronism and registration between the visual and auditory reproductions, or in other words between the movements exhibited upon the kinematograph screen and the sounds emitted concurrently therewith.

It is well known that both picture-records and sound-records are obtained by causing an appropriate medium to travel during the recording operation past the point whereat such medium is exposed to the action of (or of the influence transmitted by) the recording instrumentality. Conversely, reproduction is effected by causing a medium bearing the record (which may be either the original record or some appropriate counterpart thereof, inasmuch as the so-called record employed in reproduction may differ in character from that originally obtained) to travel past the point whereat the operation of the corresponding instrumentality, visual or auditory, is subjected to the control of such record. It will therefore be obvious that for the production of a perfect phono-kinematographic illusion it is essential that the picture and sound records respectively should maintain a constant predetermined relation to one another during their movement, throughout both the recording and reproducing operations.

To this end, according to the present invention, the original records, visual and auditory, are during the recording operation caused (by positively-acting mechanical devices) to travel concurrently and at velocities respectively bearing any desired ratio to one another past what may be termed the respective recording points, and whereby on the other hand the corresponding records, visual and auditory, employed in reproduction may be caused during the reproducing operation to travel past what may be termed the respective reproducing points in the same registration with one another and at velocities bearing the same ratio as that maintained between the original records.

The original records, visual and auditory, may be obtained concurrently and by whatever means upon a single travelling medium, and similarly the respective records, visual and auditory, employed in reproduction may be carried by a single travelling medium, absolute synchronism being thus ensured. Or the respective original records may be obtained concurrently and by whatever means upon separate media which during the recording operation are respectively caused to travel at speeds bearing any suitable ratio to one another; and similarly the corresponding records employed in reproduction may be carried by separate media whose movements, past the respective reproducing points, are performed at velocities bearing the same ratio to one another as that maintained between the original records. In each case accurate registration during reproduction may be effected by adjustment of the position of either reproducing point, when necessary, relatively to that of the other in the direction of the movement of the corresponding medium.

In cases where separate media are employed for the picture and sound records, the medium which is to receive, or which bears, the sound record (when the length of character of the latter precludes the employment of a cylinder or a disc of the well known photographic or gramophonic types), may be in the form of a strip having marginal perforations or otherwise adapted to receive motion, like the picture-film or strip which (as in the ordinary kinematograph) would serve for the visual record, from a rotary sprocket-drum over which it is passed.

The sprocket-drums (or equivalent propelling devices) for imparting motion to the strips for the picture and sound records respectively may be fast upon the same shaft so as to receive rotary motion therefrom at equal angular velocities, in which case any required difference in linear speed between the respective strips may be obtained by the use of sprocket-drums of correspondingly differing diameters. Or the respective sprocket-drums may be rotated at angular velocities corresponding to the linear speed required in the respective strips, in which case the propelling devices (whether forming parts of a single machine or of separate machines) may be geared together or to a common source of power in such manner that the desired velocity-ratio will be maintained. In either case the mechanism for imparting movement to both strips may be housed in a single casing, whilst the same propelling devices may be employed for both the recording and reproducing operations in turn.

In ordinary kinematographic apparatus, provision requires to be made for enabling the position of the "gate" (or other portion of the reproducing instrumentality) lengthwise of the picture-film to be adjusted relatively to the exposure-position of the pictures, in order that, during reproduction, the pictures may on exposure be presented in accurate alignment with the lens. Such adjustment, if effected independently of the reproductive instrumentality with which the auditory record coacts, may destroy registration between the visual and auditory reproductions. To obviate this, the apparatus employed to carry out the present invention may be provided with means whereby any adjustment of the kinematographic reproducing instrumentality lengthwise of the picture-film will produce a corresponding displacement of the sound-reproducing instrumentality (or of such part or element thereof as may be necessary) lengthwise of the sound-reproducing record. For this purpose, in cases where the respective records travel at different velocities, the sound and picture reproducing

instrumentalities would be connected by means of gearing such that any adjustment of the one would cause displacement of the other instrumentality in the proper direction and to an extent bearing the same ratio to the extent of movement imparted to the first instrumentality as that which exists between the velocities of the respective records.

The successive sections of the sound-record should be numbered or otherwise distinguished by marks in accordance with the corresponding pictures of the kinematographic record, so that (any part of the one record being readily identifiable with reference to the corresponding part of the other) both records may be started in correct registration with one another at any point in the length of each. Hence also (assuming the sound-record to be in the form of a strip like but separate from the picture-record), if any defective part should require to be excised from the one record, the corresponding portion of the other record may also be readily cut out, and, the cut ends of the respective records being joined up, no disturbance of the registration of the two records with one another will be caused. Furthermore, when a sound record is carried by a strip separate from the picture-film, the marking of the successive sections of the sound-record, as described above, ensures this record being passed through the reproducing apparatus in proper order instead of, as might otherwise happen, backwards.

I will next deal more particularly with the communication to the spectator of an impression of constant coincidence between the actual and the visually-apparent sources of the sounds as reproduced. The necessity for maintaining such an impression of coincidence is due to the fact that if (for example) an actor be kinematographically represented as speaking, and at the same time moving towards or from the spectator or from one side of the picture to the other, the perfection of the illusion will be impaired unless those sounds which represent the voice of the performer are at each instant made to appear as if they actually proceeded from whatever spot the speaker is himself visually represented as momentarily occupying.

According to my invention this illusory effect is obtained by means of two (or it might be more) separate sound-records both of which travel in synchronism and registration with the picture-film but each of which performs its functions in connection with only one side (right-hand or left-hand) of the scene of action or of the picture as the case may be. That is to say, for the purpose of obtaining the sound-records, there is placed towards each end of the proscenium (or at a corresponding point of the stage or scene of action) a separate instrumentality adapted to pick-up sound and in accordance therewith to control a corresponding sound-recording device past which one of the two recording media is made to travel; whilst for the purpose of reproduction there is placed towards each end of the kinematograph screen a separate sound-reproducing or so-called "speaking" instrumentality which is controlled by a separate record-translating device operated by that record which was originally obtained from the same end of the proscenium, or by a counterpart of said record. Although, however, the sound-reproduction will thus be due to the action of two (or more) records and two (or more) "speaking" instrumentalities, the auditory effect will be that of a single train of sounds which will appear to proceed from the vicinity of that end of the picture whereat the louder sound is actually for the moment being emitted.

The sound-recording and sound-reproducing devices referred to above are preferably both controlled electrically, each instrumentality employed to pick up the original sounds being in such case a sound-controlled electric current-regulator (which for convenience may be called a "stage-microphone") in circuit with the electrically operated or controlled device employed to produce the original record upon the corresponding travelling medium, whilst each record-translating device is also in such case an electric current-regulator in circuit with the electrically operated or controlled sound-reproducing or speaking instrumentality.

Thus, for example, for the purpose of obtaining the original sound-records, a separate stage-microphone may be placed towards each end of the front portion of the stage or other scene of action, the stage-microphone at each end being in circuit with a separate electrically operated or controlled recording instrumentality adapted to produce, on a continuously-travelling medium moving concurrently with the picture-record, a separate sound-record (of whatever kind) in accordance with the fluctuations set up, through the action of the stage-microphone, in the current flowing in the circuit of said recording instrumentality. Conversely, for the purpose of the sound-reproduction, a separate sound-reproducing device may be placed towards each end of the kinematograph screen, the device at each end being in circuit with a separate translating instrumentality governed by the sound-record (of whatever kind) borne by a continuously-travelling medium which is caused to move synchronously and in register with the kinematographic picture-film.

By this means, on the one hand two synchronous sound-records will be obtained, one from each end of the front of the stage (or scene of the incidents to be recorded), the intensity of the sound denoted by the two records varying reciprocally, as regards the respective records, in accordance with changes in the position of the source of sound relatively to the respective microphones, and also directly, in the case of both records, in accordance with variations in the distance of said source from the front of the stage or scene; whilst on the other hand, two synchronous sound-reproductions will be given forth, one from each end of the kinematograph screen, the loudness of the sound emitted by the reproducing devices varying reciprocally, as regards the respective devices, in accordance with the variations of sound-intensity denoted by the respective records (*i.e.* in accordance with the movements of the apparent source of sound from side to side of the picture), and also directly, as regards both reproducing devices, in accordance with variations in the apparent distance separating the pictorially-represented source of sound from the spectator, and the impression produced upon the auditor being that of a single train of sounds whose apparent source corresponds in position with whichever instrument happens, for the time being, to be emitting the loudest sound.

The number of records employed is not limited to two. Moreover more than a single stage-microphone may be employed in the circuit of each of the separate sound-recording instrumentalities, any number of stage-microphones, suitably disposed towards the corresponding side of the stage or scene and preferably connected in parallel, being permissible in each such circuit. Similarly, more than a single sound-reproducing device (and if desired, more than a single record-translating device) may be employed in conjunction with each of the two sound-reproducing records, any number of such devices being permissible if suitably disposed towards the corresponding end of the kinematograph screen.

In case where the action to be recorded takes place within a narrow space, the stage-microphones (if a plurality of these be employed) may all be placed near to or around the point of origin of the sound. Moreover, in similar cases, as the source of sound does not appreciably move relatively to the spectator, it is not essential that more than a single sound-record should be employed, a plurality of stage-microphones or a plurality of sound-reproducing devices (whether used in connection with one or a plurality of sound-records) merely serving in such case to enable a louder and clearer sound-reproduction to be obtained.

Each stage-microphone should be isolated so as to be prevented from receiving and transmitting other than aerially-conveyed sound-vibrations, in order that the sound-record shall not be marred in consequence of the stage-microphone being agitated by mechanical vibrations set up, for example, in the structure of the stage itself as a result of the movements of the actors, dancers, or other performers. Each stage-microphone should also be shielded as far as practicable from aerially-conveyed sound-vibrations which either originate apart from the

scene or incident of which it is desired to obtain a record, or which, although directly connected with the original scene or incident, have a character such that their partial suppression becomes desirable when the sounds are reproduced. Thus, for example, in obtaining the record of a performance comprising a song sung to orchestral accompaniment, the stage-microphones should be exposed in the direction of the singer but shielded in that of the orchestra, so as to permit the production of a record such that, on reproduction, the sound of the accompaniment would not drown the voice of the singer.

It will, moreover, be obvious that both the stage-microphones and the record-translating device should be secluded as far as possible from the influence of any vibrations (sound or mechanical) which are incidental to the mechanical or other operations involved in the process of obtaining, or reproducing from, the picture and sound records.

Dated this 25th day of October, 1911.

A. M. & WM. CLARK.
Chartered Patent Agents.
53, Chancery Lane, London, W.C.

COMPLETE SPECIFICATION.

Improved Means of Simultaneously Recording or Reproducing Sounds and Visible Movements Accompanying such Sounds.

I, AUGUSTUS ROSENBERG, of 259, High Holborn London, W.C. Engineer, do hereby declare the nature of this invention and in what manner the same is to be performed, to be particularly described and ascertained in and by the following statement :—

My invention relates to systems of phono-kinematography, that is to say systems designed on the one hand to obtain, along with a kinematographic record of a continuous train of actions, a record of the sounds accompanying the actions, and on the other hand, to present, along with a kinematographic reproduction of the actions recorded, an auditory reproduction of the sounds which accompanied those actions.

The object of my invention is to provide a system embodying various improvements whereby, in the phono-kinematographic reproduction, the illusion of reality may be secured more fully and with greater certainty than heretofore. In this connection it is to be observed that perfection in the result attained is mainly dependent upon the fulfilment of certain conditions.

Of these conditions, the first and most essential is that, both in obtaining and in reproducing from the records, absolute synchronism and correct registration must be maintained between the kinematographic and auditory impressions.

Two systems have already been proposed, according to which this first condition is fulfilled by carrying the sound-record upon the picture-film, thus obviating the use of the expensive and often unsatisfactory method of electrical synchronization between electric motors serving respectively for propelling the picture and sound records. In the first of the systems referred to, the sound-record is in the form of a continuous series of alternating impressions of light and shade side-by-side with the kinematographic views themselves, whilst in the second system the sound-record is in the form of serrations or undulations on one or both edges of the picture-film.

A second condition is that, whether in obtaining or in reproducing from the records, the sound-receiver or sound-reproducer (*i.e.* the instrumentality for receiving or reproducing the aerial sound-pulsations) must be capable of being

placed in such proximity to the actual or to the visually-apparent source of sound, as the case may be, as may be necessary on the one hand to ensure the obtaining of a clear sound-record, and on the other hand to give to the spectator the impression that the sound, as reproduced, proceeds from the picture. Hence, where the sound-record is originally produced, or in reproduction operates, at or near the kinematographic apparatus (as would, for example, be the case where the sound-record is carried upon the picture-film as stated above), the sound-receiver or sound-reproducer must be capable of being placed at any distance from the kinematographic apparatus.

In the case of only the first of the proposed systems above referred to is this second condition fulfilled, electrical connections being for this purpose employed between the sound-receiver or sound-reproducer and the sound-recording or record-translating device, as the case may be. In the second of the proposed systems, the sound-receiver, being linked mechanically to the sound-recording device, is necessarily situated in close proximity thereto, and therefore also in proximity to the kinematographic apparatus.

A third condition is that, in obtaining the records, so long as a source of sound remains at substantially the same distance from the camera whereby the picture-record is obtained, the movements of said source of sound must not, for the purpose of obtaining a clear sound-record, be restricted to the immediate vicinity of any single sound-receiver, since otherwise the reproduced sound will appreciably vary in volume not only when its visually-apparent source is represented as approaching or receding from the spectator, but also when the visually-apparent source is represented as moving in or parallel to the plane of the picture at a substantially uniform distance from the spectator.

By neither of the systems already referred to is provision made for fulfilling this third condition. That is to say, in the first of the proposed systems, provision for only a single sound-receiver is made, and it will be evident that, with such an arrangement, a comparatively small movement on the part of the source of sound, in any direction, will alter the distance separating said source from the sound-receiver, and hence will result in a corresponding variation in the total volume of sound recorded, and therefore also in the strength of the sound as reproduced. In the second of the proposed systems, although sound-receivers may be used, both of these, being mechanically coupled to their respective sound-recording devices, are (as already pointed out) necessarily situated close to the camera, so that, as in the first system, movement of the source of sound in a direction perpendicular to the optical axis of the camera must be restricted within comparatively narrow limits in order to avoid such alteration in the conjoint distances separating the source of sound from the respective sound-receivers as would prevent variation in the total volume of sound recorded, since otherwise a corresponding fluctuation in the strength of the sound as reproduced will occur notwithstanding that the visually apparent source of the sound may be represented in the picture as remaining at a substantially uniform distance from the spectator.

A fourth condition is that, in reproduction, there must be communicated to the spectator an impression of constant coincidence between the actual and the visually-apparent sources of sound respectively, notwithstanding any movement of such visually-apparent source as exhibited by the kinematographic picture.

In neither of the systems already proposed is any provision made for fulfilling this fourth condition

According to the present invention, which (like the two proposed systems referred to) avoids the necessity of electrically synchronizing the movements of the picture and sound records, the first of the conditions mentioned above may be fulfilled without the restriction of employing the same film for both records. By my invention, the respective records may if desired be carried upon independent media, the sound-record being in any convenient form and carried either

by a strip or otherwise. The movements of the separate media (if used) are synchronized mechanically by gearing together positively the respective propelling devices, whilst provision is made for maintaining correct registration between the respective records.

Thus, for example, where the sound-record is in the form of a strip (like the picture-film of the ordinary kinematograph), it may have marginal perforations or be otherwise adapted to receive motion from a rotary sprocket-drum or equivalent propelling-device over which it is passed: the sound-record being however propelled continuously at a uniform velocity as distinguished from the picture film when (as in certain well-known arrangements of apparatus) said film is caused to advance intermittently between the intervals of obscuration which are necessary when successive views are substituted one for another.

The sprocket-drums (or equivalent propelling devices) for imparting motion to the strips for the picture and sound records respectively may be fast upon the same shaft so as to receive rotary motion therefrom at equal angular velocities, in which case any required difference in linear speed between the respective strips may be obtained by the use of sprocket-drums of correspondingly differing diameters. Or the respective sprocket-drums may be rotated at angular velocities corresponding to the linear speed required in the respective strips, in which case the propelling devices (whether forming parts of a single machine or of separate machines) may be geared together or to a common source of power in such manner that the desired velocity-ratio will be maintained. In either case the mechanism for imparting movement to both strips may be housed in a single casing, whilst the same propelling devices may be employed for both the recording and reproducing operations in turn.

In ordinary kinematographic apparatus, provision requires to be made for enabling the position of the "gate" (or other portion of the reproducing instrumentality) lengthwise of the picture-film to be adjusted relatively to the exposure-position of the pictures, in order that, during reproduction, the pictures may on exposure be presented in accurate alignment with the lens. Such adjustment, if effected independently of the reproductive instrumentality with which the auditory record coacts, may destroy registration between the visual and auditory reproductions. To obviate this, the apparatus employed to carry out the present invention may be provided with means whereby any adjustment of the kinematographic reproducing-instrumentality lengthwise of the picture-film will produce a corresponding displacement of the sound-reproducing instrumentality (or of such part or element thereof as may be necessary) lengthwise of the sound-reproducing record. For this purpose, in cases where the respective records travel at different velocities, the sound and picture reproducing instrumentalities would be connected by means of gearing such that any adjustment of the one would cause displacement of the other instrumentality in the proper direction and to an extent bearing the same ratio to the extent of movement imparted to the first instrumentality as that which exists between the velocities of the respective records.

As regards the second condition, this is preferably fulfilled in the case of the present invention (as in the first of the proposed systems already referred to) by the employment of electrical connections between the sound-receiver or sound-reproducer and the sound-recording or record-translating device, as the case may be.

In order to fulfil the third condition I employ, in obtaining the records, a plurality of sound-receivers so placed relatively to the source of sound that the conjoint distances separating said source from the respective sound-receivers, and therefore the total volume of sound recorded, will not appreciably vary so long as said source remains at a substantially uniform distance from the camera. A plurality of sound-records may also be employed, but, for the purpose of fulfilling the single condition in question, this is not essential, since, according

to my invention, all the sound-receivers may coact in the production of a single sound-record, in which case this single record will represent a substantially uniform volume of sound, and hence the sound as reproduced will exhibit a corresponding uniformity of volume.

As regards the fourth condition, it is to be observed that the necessity for communicating to the spectator an impression of constant coincidence between the actual and the visually-apparent sources of a train of sounds as reproduced, is due to the fact that if (for example) an actor be kinematographically represented as speaking, and at the same time moving not only towards or from the spectator but also from one side of the picture to the other, the perfection of the illusion will be impaired unless those sounds which represent the voice of the performer are at each instant made to appear as if they actually proceeded from whatever spot the speaker is himself visually represented as momentarily occupying.

According to my invention this illusory effect is obtained by means of two (or it might be more) separate sound-records both of which travel in synchronism and registration with the picture-film but each of which performs its functions in connection with only one side (right-hand or left-hand) of the scene of action or of the picture as the case may be. That is to say, for the purpose of obtaining the sound-records, there is placed towards each end of the proscenium (or at a corresponding point of the stage or scene of action) a separate sound-receiver or instrumentality adapted to pick up sound and in accordance therewith to control a corresponding sound-recording device past which one of the two recording media is made to travel; whilst for the purpose of reproduction there is placed towards each end of the kinematograph screen a separate sound-reproducer (or so-called "speaking" instrumentality) which is controlled by a separate record-translating device operated by that record which was originally obtained from the same end of the proscenium, or by a counterpart of said record. Although, however, the sound-reproduction will thus be due to the action of two (or more) records and two (or more) "speaking" instrumentalities, the auditory effect will be that of a single train of sounds which will appear to proceed from the vicinity of that end of the picture whereat the louder sound is actually for the moment being emitted.

The sound-recording and sound-reproducing devices referred to above are preferably both controlled electrically, each sound-receiver being in such case a sound-controlled electric current-regulator (which for convenience may be called a "stage-microphone") in circuit with the electrically operated or controlled device employed to produce the original record upon the corresponding travelling medium, whilst each record-translating device is also in such case an electric current-regulator in circuit with the electrically operated or controlled sound reproducing or speaking instrumentality.

By such means, on the one hand two synchronous sound-records will be obtained, one from each end of the front of the stage (or scene of the incidents to be recorded), the intensity of the sound denoted by the two records varying reciprocally, as regard the respective records, in accordance with changes in the position of the source of sound relatively to the respective microphones, and also directly, in the case of both records, in accordance with variations in the distance of said source from the front of the stage or scene: whilst on the other hand, two synchronous sound-reproductions will be given forth, one from each end of the kinematograph screen, the loudness of the sound emitted by the reproducing devices varying reciprocally, as regards the respective devices, in accordance with the variations of sound-intensity denoted by the respective records (*i.e.* in accordance with the movements of the apparent source of sound from side to side of the picture), and also directly, as regards both reproducing devices, in accordance with variations in the apparent distance separating the pictorially-represented source of sound from the

spectator, and the impression produced upon the auditor being that of a single train of sounds whose apparent source corresponds in position with whichever instrument happens, for the time being, to be emitting the loudest sound.

In the accompanying drawing, which illustrates diagrammatically one form of apparatus for carrying out my invention, A represents a theatrical stage the actions performed upon which, together with the accompanying sounds, it is desired first to record and afterwards to reproduce, whilst B represents the casing of the recording and reproducing mechanism.

The kinematographic portion of the mechanism may be of any convenient type, the only portions indicated in the diagram being the lens C with its carrier *c*, the sprocket-drum D for propelling the picture-record E, and the paying-out and taking-up rollers F and G (assuming such to be employed) between which the record E is caused to travel past the lens by the sprocket-holes *e* at the margins of the strip which bears the picture-record engaging over sprocket-teeth on the drum D as usual.

H^1 and H^2 are two so-called stage-microphones placed one at each side and towards the front of the stage A for the purpose of picking-up the sounds which accompany the theatrical action, each stage-microphone serving to control the production of a separate sound-record. The sound-records are (in the example illustrated) to be understood as produced photographically side by side upon a single strip J, the one record K^1 being produced under the control of the stage-microphone H^1 whilst the other record K^2 is produced under the control of the stage-microhpone H^2 as hereafter more particularly explained.

The strip J which bears the sound-records extends parallel with the strip E which bears the picture-record, and like the latter is caused to travel between paying-out and taking-up rollers L and M by the sprocket-holes *j* at the margins of the strip engaging over sprocket-teeth on a sprocket-drum N. The drums N and D are positively driven (through the medium of any convenient mechanism) at suitable peripheral velocities corresponding to the linear speeds required in the respective record-strips J and E, so as to ensure these strips moving in perfect synchronism with one another. For this purpose, in the example illustrated, both sprocket-drums are fast upon the same shaft O, which is rotated at a uniform angular velocity; the difference (if any) required between the linear speeds of the respective strips J and E being obtained by employing drums N and D of correspondingly differing diameters, as indicated. Thus, in the example illustrated, the linear speed required in the strip J which bears the sound-records is assumed to be three times as great as that of the strip E which bears the picture-record, the diameter of the drum N being likewise three times as great as that of the drum D. In the event of the picture-record being moved intermittantly past the lens C, usual means (not indicated) may be provided for producing a slack loop upon the strip E and for taking up the slack in time with the movement of the obscuring shutter, as will be readily understood.

The sound-recording devices P^1, P^2 through the medium of which the records K^1 and K^2 are produced, are (in the example illustrated) understood to be light-projecting instrumentalities whose illuminating power is controlled electrically by means of the respective stage-microhpones H^1, H^2; each stage-microphone H^1 or H^2 serving to control a separate electric circuit fed with current from a battery (or other source) h^1 or h^2 and passing through suitable electric apparatus in connection with the recording device P^1 or P^2, so that variations in electric resistance produced, in the corresponding circuit, by the action of each stage-microphone will produce similar variations in the light-intensity of the device P^1 or P^2, which variations are utilized in producing the record itself.

The apparatus employed in reproduction may equally well be represented by the same diagram, it being however understood that in this case A represents the

kinematographic screen, H^1, H^2, sound-reproducing devices placed at or near each end of the screen, and P^1, P^2 sound-record translating devices adapted to control, electrically, the respective devices H^1, H^2, the translating devices P^1, P^2 being themselves actuated or controlled by the sound-reproducing records K^1, K^2 respectively, and all these operations being effected in any convenient manner.

Correct registration between the picture and sound reproductions is ensured by causing any adjustment of the lens-carrier *c* lengthwise of the picture-record strip E to bring about automatically a corresponding adjustment of the carrier *p* (with the sound-producing devices P^1, P^2) lengthwise of the strip J. For this purpose, in the example illustrated, the lens-carrier *c* has attached to it a longitudinally extending rack q^1 with which gears a toothed pinion Q^1 fast on a shaft Q journalled in stationary bearings, whilst the carrier *p* has attached to it a similar and parallel rack q^2 with which gears another toothed pinion Q^2 fast on the same shaft Q: the ratio between the diameters of the pinions Q^1 and Q^2 being the same as that between the diameters of the sprocket-drums D and N. Hence when the lens-carrier *c* is adjusted (as for example by means of a finger-wheel R actuating a pinion *r* in mesh with the rack q^1) lengthwise of the strip E, the carrier *p* will be caused to move as much farther lengthwise of the strip J as the latter strip travels faster than the strip E, with the result that correct registration between the records, if once established, will be automatically maintained.

Successive pictures of the kinematographic record, as indicated at e^1 . . . . . e^6, would be numbered consecutively, and the corresponding sections j^1, j^2 *etc.* of the sound-records would be similarly numbered, as indicated, so as to ensure that in the operation of reproduction the respective records shall always be started in correct mutual registration.

The number of sound-records employed is not limited to two. Moreover, more than a single stage-microphone may be employed in the circuit of each of the separate sound-recording instrumentalities, any number of stage-microphones, suitably disposed towards the corresponding side of the stage or scene and preferably connected in parallel, being permissible in each such circuit. Similarly, more than a single sound-reproducing device (and if desired, more than a single record-translating device) may be employed in conjunction with each of the two sound-reproducing records, any number of such devices being permissible if suitably disposed towards the corresponding end of the kinematograph screen.

Each stage-microphone should be isolated so as to be prevented from receiving and transmitting other than aerially-conveyed sound-vibrations, in order that the sound-record shall not be marred in consequence of the stage-microphone being agitated by mechanical vibrations set up, for example, in the structure of the stage itself as a result of the movements of the actors, dancers, or other performers. Each stage-microphone should also be shielded as far as practicable from aerially-conveyed sound-vibrations which either originate apart from the scene or incident of which it is desired to obtain a record, or which, although directly connected with the original scene or incident, have a character such that their partial suppression becomes desirable when the sounds are reproduced. Thus, for example, in obtaining the record of a performance comprising a song sung to orchestral accompaniment, the stage-microphones should be exposed in the direction of the singer but shielded in that of the orchestra, so as to permit the production of a record such that, on reproduction, the sound of the accompaniment would not drown the voice of the singer.

It will, moreover, be obvious that both the stage-microphones and the record-translating device should be secluded as far as possible from the influence of any vibrations (sound or mechanical) which are incidental to the mechanical or other operations involved in the process of obtaining, or reproducing from, the picture and sound records.

Having now particularly described and ascertained the nature of the said

invention and in what manner the same is to be performed, I declare that what I claim is :—

1. A system of phono-kinematography wherein, in the recording operation there are employed, concurrently with the kinematographic-recording device, a plurality of sound-transmitting instrumentalities so placed relatively to the point of origin of a train of sounds to be recorded that the total volume of the sounds of said train, as recorded, will remain unaffected by movement of the source of the sounds relatively to the respective transmitting instrumentalities, so long as said source remains at a substantially uniform distance from the camera, substantially as set forth.

2. A system of phono-kinematography according to Claim 1, wherein, in the reproducing operation there is employed, concurrently with the kinematographic reproducing device, a sound-reproducing device or devices whose operation is controlled by a sound-record produced under the control of the plurality of transmitting instrumentalities specified in said claim, substantially as set forth.

3. A system of phono-kinematography according to Claim 1 wherein, in the reproducing operation, there are employed, concurrently with the kinematographic reproducing device, a plurality of sound-reproducing devices whose operation is controlled, severally, by separate sound-records produced respectively under the control of the several sound-transmitting instrumentalities specified in said claim, substantially as set forth.

4. A system of phono-kinematography according to Claim 1, wherein the picture and sound records, in the operations both of obtaining and of reproducing from said records, are propelled by means of devices whose movements are mechanically synchronized with one another, substantially as set forth.

5. In a system of phono-kinematography according to Claim 4, the employment of independent picture and sound records each on a separate film or strip of material, substantially as set forth.

6. In a system of phono-kinematography according to Claim 5, the employment for the purpose of propelling the independent picture and sound records, of separate sprocket-drums or equivalent devices fast upon a single shaft, substantially as set forth.

7. In a system of phono-kinematography according to Claim 6, the employment of sprocket-drums whose diameters are proportioned to the linear velocities required in the respective records, substantially as described.

8. In a system of phono-kinematography according to Claim 5, the employment of sprocket-drums mechanically geared together or to a common source of power so as to be driven at peripheral speeds corresponding to the linear velocities required in the respective records, substantially as described.

9. In a system of phono-kinematography as specified, the employment for the purpose of ensuring correct registration between the visual and auditory reproductions, of means whereby adjustment of the "gate" lengthwise of the picture film is caused to effect an equivalent adjustment in the case of the sound-record translating-instrumentality, substantially as set forth.

10. In a system of phono-kinematography according to Claim 5, marking the corresponding sections of the picture and sound records respectively in accordance with one another, substantially as and for the purpose set forth.

11. In a system of phono-kinematography as specified, the employment in combination, in the operation of obtaining the record, of separate instrumentalities placed towards opposite ends of the front of the stage or scene of action and adapted to pick up sound and electrically control independent sound-recording devices operating on separate records, substantially as and for the purpose set forth.

12. In a system of phono-kinematography as specified, the employment in combination, in the reproducing operation, of separate sound-reproducing instrumentalities placed towards opposite ends of the kinematograph screen, separate

sound-records produced according to Claim 11, and separate record-translating devices adapted to be controlled by the respective sound-records and to electrically control the respective sound-reproducing instrumentalities, substantially as and for the purposes set forth.

13. In a system of phono-kinematography according to Claim 11, the employment for picking-up sound at each end of the front of the stage or scene of action, of a plurality of so-called stage-microphones in parallel electric connection with one another, substantially as set forth.

14. In a system of phono-kinematography according to Claim 12, the employment at each end of the kinematograph screen, of a plurality of sound-reproducing devices concurrently controlled electrically by the corresponding record-translating device, substantially as set forth.

15. In a system of phono-kinematography as specified, the combination with a single sound-record and a single electrically-controlled sound-recording device adapted to operate thereon, of a plurality of devices for picking-up sound placed near to or around the point of origin of the sound and electrically connected in parallel with one another, substantially as set forth.

16. In a system of phono-kinematography according to Claim 11, the employment in the operation of obtaining the record, of a single strip bearing side-by-side the picture-record and the two independent sound-records, substantially as set forth.

17. In a system of phono-kinematography according to Claim 12, the employment in the reproducing operation, of a single strip bearing side-by-side the picture record and the two independent sound-records, substantially as set forth.

18. In a system of phono-kinematography as specified, the employment of stage-microphones isolated so as to be prevented from receiving and transmitting other than aerially-conveyed sound-vibrations, substantially as and for the purpose set forth.

19. The improved system of phono-kinematography, substantially as herein described with reference to the accompanying drawing, for the purposes set forth.

Dated this 25th day of April, 1912.

A. M & WM. CLARK,
Chartered Patent Agents,
53, Chancery Lane, London, W.C.

[This Drawing is a reproduction of the Original on a reduced scale]

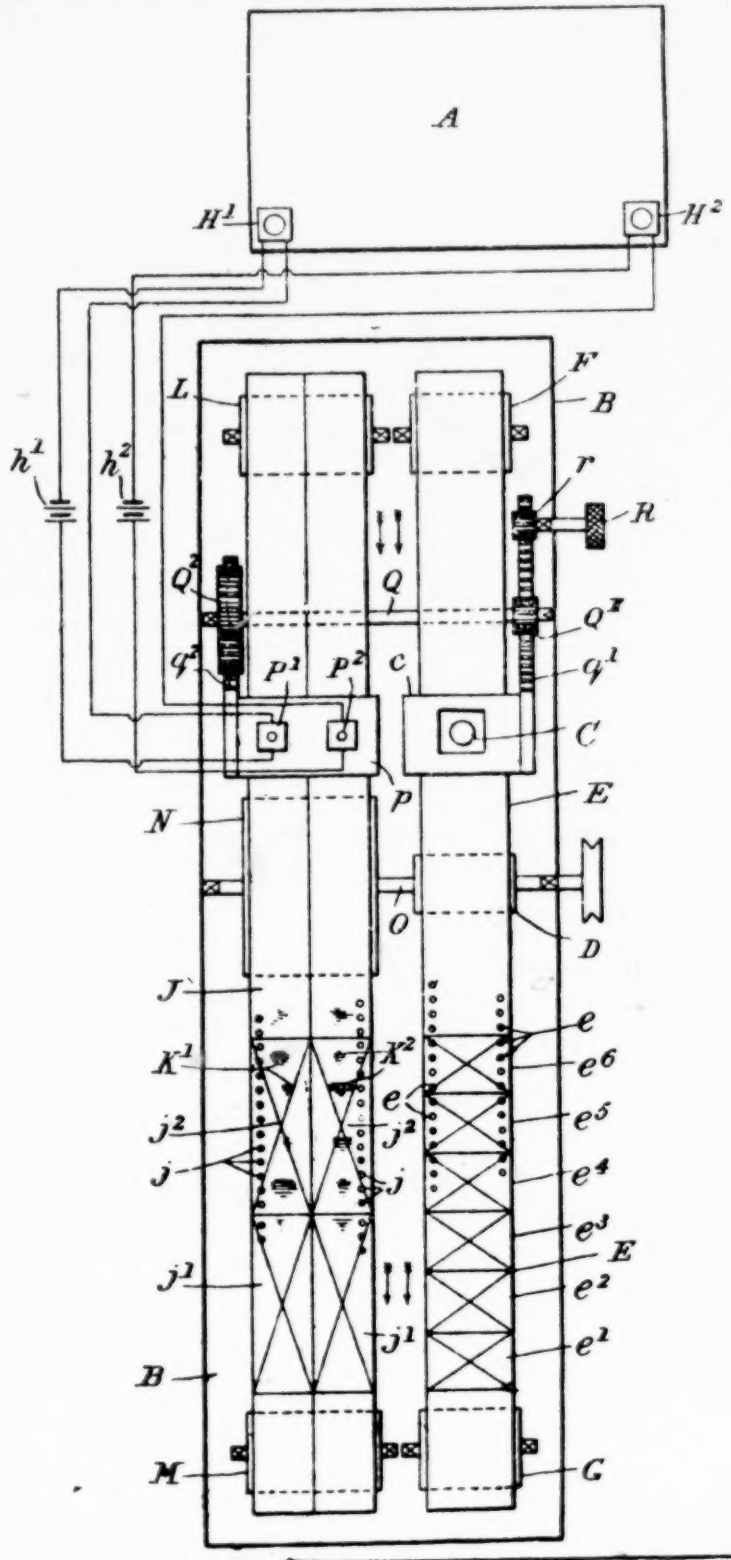

N° 6727 A.D. 1913

Date of Application, 19th Mar., 1913

Complete Specification Left, 16th Sept., 1913—Accepted, 19th Mar., 1914

PROVISIONAL SPECIFICATION.

Improvements in Kinematograph Apparatus and Pictures.

I, ALBERT ERNEST DOWNING, 12, Nicholls Street, West Bromwich, Engineer, do hereby declare the nature of this invention to be as follows:

This invention relates to kinematograph pictures, & also to the apparatus to make possible the insertion into the moving picture, the words that are spoken by the actors, or words applicable to the scenes depicted, in such a way that the words & actions synchronize.

This invention is designed to greatly extend the usefulness & educational value of the kinematograph, & make possible the production of works which do not depend entirely on the dramatic effect of the scenes, & actions, but on the words uttered by the various characters, or noble thoughts & sentiments expressed by authors, which under existing modes of production are almost lost.

In the moving picture in accordance with this invention, the words uttered by the various characters, or words descriptive of events or scenes, are made to appear & move synchronously across the picture, preferably from right to left, either at the top or bottom.

The words can be made to appear black, or white, or in colour, according to the method used to print them upon the films.

To make a kinematograph picture according to this invention, it is necessary to have a ribbon of suitable length, made of paper or linen, or other suitable material, with all the moving words that should appear on the complete compound picture printed thereon, & so spaced that each word & space has the position it should occupy in relation to the picture it is to be inserted into.

There are several ways I can make these ribbons of correctly spaced words, one way I provide a phonograph which runs at an unvarying speed. In conjunction with this phonograph, I have a clockwork or other suitable means to make a distinct sound, at every second or certain fraction of a second, which is recorded by the phonograph. These sounds form period indicators when making the ribbon from the dictation of the phonograph.

When the play is being acted, the camera is used as usual to make a film, but in addition to the camera, the phonograph is started & under most favourable circumstances makes a record of what is being said.

When it is impossible to actually record the speeches of the actors I provide an operater for the phonograph, who repeats all the actors say & in suitable periods of the play he or she can explain & amplify the story that is being portrayed.

When a record is made, it is necessary to print all the words recorded onto a ribbon, each word being correctly spaced in relation to the others & the pauses & intervals of rest between the spoken words. To accomplish this I provide a typewriter or the like of special construction, that prints upon a ribbon passing continuously into position, one equal space at a time at every depression of the keyboard. Assuming, that on an average there are fourteen letters in the words spoken in a second, then for every fourteenth part of a second recorded

on the phonograph record, one space of the ribbon equal to one printed letter is moved forward. The time indicator on the record shows exactly what words & spaces should appear on the strip of ribbon representing each respective second, so that when finished, each word has its correct space in proportion to the whole length of ribbon. I provide on the typewriter a simple mechanism, which gives the exact length of the completed ribbon. There is also a mechanism on the camera which gives the exact length of the film. To make this compound film, the exact length of the printed ribbon & the film, as recorded by their respective mechanisms, is carefully taken, & by a simple calculation the exact speeds necessary to run the camera & the ribbon, can be ascertained, that is needed to obtain a kinematograph film of the ribbon, the exact length of the first film.

The ribbon is made to pass before a kinematograph camera preferably from right to left & the spools or drums or the like which hold the ribbon are driven by mechanism from the camera, that can be accurately adjusted by means of expanding pullies or compound gearing to impart to the ribbon the speed necessary to run it past the camera, to produce a film with the words of the ribbon thereon exactly the length required. The improved films with the words & subject combined can now be photographically printed from the two films suitably held together, or the two films can be run through the kinematograph together, & so thrown onto the screen.

To make a clearer print of a compound film, I can cut away or perforate much of the blank part of the ribbon film, leaving only sufficient material for strength, to carry it through the machine. In a modification of this invention, a recording ribbon can be produced without a phonograph, in which case a ribbon is given a certain forward movement, & a time recorder regularly marks the seconds or fractions of a second onto it & a stenographer writes in shorthand or other applicable method, all that is taking place, or being said onto this moving ribbon. Another ribbon suitable for reproduction is made from this, as here-in-before described.

Dated the 18th day of March, 1913.

ALBERT ERNEST DOWNING.

COMPLETE SPECIFICATION.

Improvements in Kinematograph Apparatus and Pictures.

I, ALBERT ERNEST DOWNING, 12, Nicholls Street, West Bromwich, Engineer, do hereby declare the nature of this invention and in what manner the same is to be performed, to be particularly described and ascertained in and by the following statement:—

This invention relates to improvements in kinematograph pictures and has for its object the making of films for kinematograph pictures which will show when thrown upon the screen, by the usual projector, words moving across the living picture readable to the audience, and may be single ejaculations, short isolated sentences or long passages, appertaining to the pictures they accompany.

These words may be descriptive of scenes or events or the reproduction of the actual words spoken by the various characters. They appear and move at the same time and speed as the characters in the pictures seem to speak them.

Various ways have been tried to give realism to kinematography.

In some cases the phonograph has been adopted, but beside the difficulties in making the reproduced words sound natural and synchronous with the picture, it is costly, and also necessary to have special apparatus needing expert attention every time the picture is shown. Another way of giving realism is to have

a moving band with the words printed thereon moving at the same time as the picture view, but quite separate therefrom.

This invention comprises a special way of taking a kinematograph picture in combination with a time recorder and indicator both audible and visible and also a typewriter to print words correctly spaced on a continuous ribbon or the like. Also the means to make a film with words on, of a certain definite length also a special way of recording all words that are required to appear on the film giving indications of time, and also the process of printing the words from one film onto another (the picture film) in such a manner that they describe and appertain to the picture or series of pictures.

In the moving picture, in accordance with this invention the words uttered by the various characters, or words descriptive of events or scenes, are made to appear and move synchronously across the picture, preferably from right to left either at the top or bottom.

The words can be made to appear black or white; or in colour, according to the method used to print them upon the films

To make a kinematograph picture according to this invention, it is necessary to have a ribbon of suitable length with perforations along the edges, or plain, made of paper or other suitable material, with all the moving words that should appear on the complete compound picture printed thereon, and so spaced, that each word and space has the position it should occupy in relation and proportionate to the picture it is to be inserted into.

To make these ribbons of correctly spaced words a phonograph or a stenographer or other suitable means can record all that is being said or done by the various characters whilst the photographs are being taken. In conjunction with this phonograph I have a clockwork or other suitable means to make a distinct sound at every second or certain fraction of a second, which is also recorded on the phonograph record. These distinct and regular sounds form period indications when making the ribbons from the dictation of the phonograph.

I have assumed 14 to be the maximum number of letters in the words spoken in a second, in this case for every second indicated on the phonograph (or in the modification by the stenographer) 14 spaces of the ribbon that is being printed upon by the typewriter are moved forward, no matter if much fewer letters are contained in the words used or if no words are spoken, each second elapsing when taking the photographs is represented by the same length of ribbon. Of course the maximum number of letters may be more or less than 14, but whatever the maximum number of letters or letter spaces in any second, each second of that series must be represented by the same length of ribbon. The time recorder shows on its face the seconds and minutes and is so arranged in position that the seconds and minutes, as the finger moves, are shown unobtrusively on all the photographs, and aided by these indications on the photographs, any section can be correctly defined, and words appertaining only to certain portions of the picture can be easily inserted. When it is undesirable to use a phonograph to record what is being said or happening, a stenographer can take a record in shorthand, or other suitable means. To do so, I provide a ruled paper showing numbered sections preferably representing seconds. The stenographer when writing, can so apportion what he is recording by means of the visible and audible time register that each respective second of the speech is written in the space corresponding with the number of the seconds. When the play or picture is to be taken, the camera is used as usual (but in conjunction with the time recorder) to make a film, and the phonograph or the stenographer proceeds to record what is being said or done. When all the words and actions are recorded, it is necessary to print the words onto a ribbon or the like, each word being correctly spaced in relation to the others, and the pauses and intervals of rest between each word.

To accomplish this, I provide a typewriter or the like having a mechanism that holds a roll or ribbon of paper or the like & allows the type to print upon

the ribbon passing continuously into position, one equal space at a time, at every depression of the key board. Instead of the usual typewriter carriage, I provide a drum or the like on one side of the typewriter to hold the blank ribbon and on the other a drum to hold the printed ribbon. The ribbon can be plain or can be perforated along its edges to engage in projecting teeth on a wheel or wheels which move one tooth at each depression of the keyboard so imparting the necessary movement to the ribbon in alignment and for any length. Assuming that on an average there are fourteen letters in the words spoken in a second, then for every fourteenth part of a second, recorded by the phonograph, or stenographer, one small piece of ribbon equal to one printed letter is moved forward. The time indicator on the record shows exactly what words and spaces should appear on the strip of ribbon representing each respective second, so that when finished, each word has its correct space in proportion to the whole length of ribbon. A simple mechanism on the typewriter gives the exact length of the completed ribbon, and also a mechanism on the camera gives the exact length of the film. To make this compound film, the exact length of the printed ribbon and the film, as recorded by their respective mechanisms, is carefully taken and by a simple calculation, the exact speeds necessary to run the camera and the ribbon, can be ascertained, that is needed to obtain a kinematograph film of the ribbon the exact length of the first film. By making the ribbon in sections by the aid of the recorded time, shown on the photographed indicator, any variation in the speed of the camera is reduced to a minimum. The printed ribbon is made to pass before a camera and the spools or drums which hold the ribbon, are driven by mechanism in conjunction with the camera. These drums or the like can be accurately adjusted by means of expanding pulleys, compound gearing, or making a pulley dead to size, and driving by a band, to impart to the ribbon the speed necessary to run it past the camera, to produce a film with the words of the ribbon thereon exactly the length required. The improved films with the words and subject combined can now be photographically printed from the two films suitably held together, or a stencil can be made of the ribbon film by perforating the printed words, and, by applying colour to these perforations, the words can be produced onto the picture film. To make a clearer print of a compound film much of the blank parts of the ribbon film can be perforated or cut away, leaving just sufficient strength for their proper manipulation.

Having now particularly described and ascertained the nature of my said invention, and in what manner the same is to be performed, I declare that what I claim is:—

Improvements in kinematograph apparatus and pictures, consisting in this, that from two films or the like on which are respectively displayed, pictures and appropriate descriptive or other words, there is produced a single film containing the said pictures and words in proper order so that when the pictures are thrown or projected on to the screen by the usual lantern there are simultaneously projected on to the screen from the same film the words appropriate to the said pictures, substantially as described.

Dated the 15th day of September, 1913.

ALBERT ERNEST DOWNING.

N° 18,163 A.D. 1913

Date of Application, 9th Aug., 1913—Accepted, 10th Aug., 1914

COMPLETE SPECIFICATION.

Improvements in and relating to Combined Moving Picture and Talking Machine.

I, GUSTAV JULIUS KINDERMANN, a Confectioner, residing at Park Terrace, Wayville, in the State of South Australia, in the Commonwealth of Australia, do hereby declare the nature of this invention and in what manner the same is to be performed, to be particularly described and ascertained in and by the following statement:—

This invention relates to improvements in connection with combined moving picture and talking apparatus of the kind in which a film is employed having in addition to the usual series of pictures, a phonographic track serving as a record for the talking machine part of the apparatus.

The invention consists mainly in the provision on a cinematographic film of a marginal strip having on its surface a phonographic grooved track or record.

According to the invention moreover, a photographic film for use in cinematographic apparatus, is provided with a marginal strip coated with wax to form a phonographic record surface.

The invention also comprises the apparatus hereinafter described for use with such combined films and strips.

In the accompanying drawings:

Figure 1 is a diagrammatic view partly in side elevation and partly longitudinal section of my combined moving picture camera and recording machine.

Figure 1ª is a diagrammatic detail view showing the relative positions of the phonographic sound box, and the photographic portion of the apparatus.

Figure 2 is a view in elevation and partly diagrammatic showing my apparatus for reproducing the pictures and sounds recorded by the machine illustrated in Figure 1.

Figure 3 is a detail view of part of the mechanism shown in Figure 2.

Figure 4 is a detail perspective view of a portion of my combined picture and sound film.

Figure 5 is a cross sectional view taken through the hub of one of the film reels and showing the manner of securing the end of the film at the hub.

In the production of what is known at the present time as "talking pictures" it is an exceedingly difficult matter to reproduce the pictures in synchronism with the sound so that the persons or figures of the picture will appear to be giving forth the proper sounds at the proper time, and the particular purpose of this invention is to remedy such objection.

Prior to entering upon a detailed description of my invention I might state briefly that in the practice of the latter in making the sound, and photographic records I first provide a film which is in the nature of a combined picture and sound recording film, the major portion of the film being of the usual character employed for taking moving pictures, this film having extending longitudinally of the edge thereof and on the surface thereof a marginal "sound" strip or film which may be termed the "sound film". This sound film is preferably in the nature of a relatively thin flexible zinc strip which is covered with wax for the purpose of having sound producing grooves formed thereon by the recording

apparatus. This sound recording machine is combined with a moving picture camera of the continuous feed type, so that if a musical performance is to be produced, the photograph of the actors will be taken by the camera at the same time the musical composition being sung is being recorded on the sound recording portion of the film. After the record of the performance has been made, the zinc sound section of the film is used to make a reproducing record, much in the manner that the ordinary gramophone record is made. For instance, the strip may be etched with an acid, and used as a mould in the production of the reproducing film. This latter film may be of any suitable material, such as celluloid, or if desired, may be in the nature of a flexible vulcanite film, such as is used in speaking clocks. After the reproducing film has been made, it is fastened to the reproducing picture film so that the picture film and the sound film will be unitary as they pass through the machine.

In giving a performance the reproducing film is run through a combined exhibiting and sound reproducing machine, having a continuous feed by which the scenes or pictures are projected upon the screen, and at the same time the needle or stylus running in the sound grooves of the sound film, causes a composition to be reproduced through the medium of a receiver, similar to a telephone receiver and connected in circuit with the transmitter. Thus the pictorial scenes and the composition will be simultaneously rendered.

I will first proceed to describe the apparatus for taking the pictures and recording the sounds.

Referring now, especially to Figure 1 of the drawings, wherein I have shown a record making machine, the numeral 1 indicates a casing which is mounted upon a suitable support 2, this casing containing the camera section C and the sound recording section S. The numeral 3 designates a partition having the upper slot 4 and the lower slot 5. Adjacent to the upper slot is mounted a film reel 6 from which the combination sound picture recording film F runs, this film passing through the slot 4, thence over the roller 7, through the slots C^1 of the camera section, thence over the roller 8 to the lower film reel 9. In order to drive the lower film reel 9 and consequently move the film, I employ a rotatable shaft 11, which is designed to have a handle (shown in dotted lines in Figure 1) attached thereto. The shaft 11 carrying the sprocket 12 meshes with the intermediate sprocket wheel 13, the latter in turn meshing with the gear 14 on the shaft 15 of the lower reel 9. As the latter rotates, it winds up the film, drawing the picture taking portion P thereof past the lens of the camera section C so that the picture or scene is recorded in the usual manner, while the sound recording section R of the film which as stated, is preferably made of a thin flexible strip of zinc covered with wax, is drawn past the recording stylus 16 on the sound box 17 of the sound recording portion S of the apparatus. The latter includes the horn 18, the bell mouth of which is shown at 19 and terminates at the opening 20 formed in the partition 21, the latter of which has a central opening 22 for the passage of the body portion of the camera section C. The front of the casing is formed of a mica ruby sound transmitting diaphragm 23 having a central collar or ring 24 through which the camera body may project. The diaphragm, while it excludes the light from the casing and therefore prevents the destruction of the film, allows the sound to be transmitted from the megaphone or horn H at the front of the casing through to the horn 18 and thence to the box 17, the sound being recorded on the film by the stylus 16, which may pass through a slot 16^1 to engage with the sound film the stylus being shown as not contacting with the "sound" film in Fig. 1. A spring 25 and adjacent screw 26 are employed for adjusting the tension or the pressure of the stylus 16 upon the sound portion R of the film.

After the original or zinc record film has been made, it is stripped or separated from the picture portion P of the film and etched with acid and used as a mould for producing a matrix as in the method of making gramaphone records. The sound reproducing film is formed by placing a celluloid or other composition film

or strip against the matrix and subjecting such composition film to sufficient pressure to make a positive film. The picture section P of the film is developed and printed in the usual manner, and by securing the sound and picture reproducing films so formed, one to the other, the combined reproducing sound and picture film is ready for reproduction.

Referring to Figure 4 it will be seen that as the sound section R and the picture section P of the record film form practically a unitary strip as they pass through the recording machine, the sounds would be recorded simultaneously and at proper intervals with the pictures, for instance, any unevenness of the feed of the film would not interfere with the recording of the sounds simultaneously with the taking of the pictures, that is to say, should the picture film section jump or trip going through the lens for an instant, the sound recording part of the film would do likewise.

Should it now be desired to run the combined picture film and sound film through a machine for reproduction, this may be done with the apparatus shown in Figure 2.

Referring to said Figure 2, the numeral 27 designates a base upon which is mounted the frame 28 of the exhibiting machine. The film travels over the spools 29 and the sprocket spools 30 and 31, which are of the usual construction, the film passing in front of the projecting portion of the machine at 32, so that it is thrown or exhibited upon the screen. The numeral 33 indicates a sound box having a stylus or sapphire point 34 which is designed to work in the sound grooves of the sound film section R^1. This sound box is constructed on the principles of a telephone transmitter and is resiliently mounted by means of a spring 35 on the arm 36 carried by the bracket 37. As the film passes in front of the projecting apparatus, the stylus working in the groov reproduces the sounds which are transmitted through an electric circuit to the horn or megaphone M, by which they are conveyed to the audience. This electric circuit includes the wires 38 and 39 connected to the binding posts 40 and 41 respectively at the "transmitter" and to the binding posts 42 and 43 at the "receiver" or horn from which the sound is transmitted to the audience, a battery 44 being interposed in the circuit. The letter M^1 designates a mo or, the shaft 45 of which carries a drive pulley 46 connected through the belt 47 to the drive pulley 48 on the shaft 49, which shaft also carries a drive pulley 50 for driving the belt 51 which runs over the pulley 52 on the shaft 53, this shaft being journalled in standards 54 and carries the spool 29, over which the film runs and by which it is driven.

Having now particularly described and ascertained the nature of my said invention and in what manner the same is to be performed, I declare that what I claim is:—

1. The provision on a cinematographic film, of a marginal strip having on its surface a phonographic grooved track or record, substantially as and for the purpose hereinbefore set forth.

2. For use in connection with cinematographic apparatus, a photographic film having a marginal strip coated with wax to form a phonographic record surface substantially as and for the purpose hereinbefore set forth.

3. Cinematographic apparatus for use with films and strips as claimed in Claims 1 or 2, substantially as hereinbefore described with reference to the accompanying drawings.

Dated this 9th day of August, 1913.

MATHYS & Co.,
Chartered Patent Agents,
43, Chancery Lane, London, W.C.

[This Drawing is a reproduction of the Original on a reduced scale.]

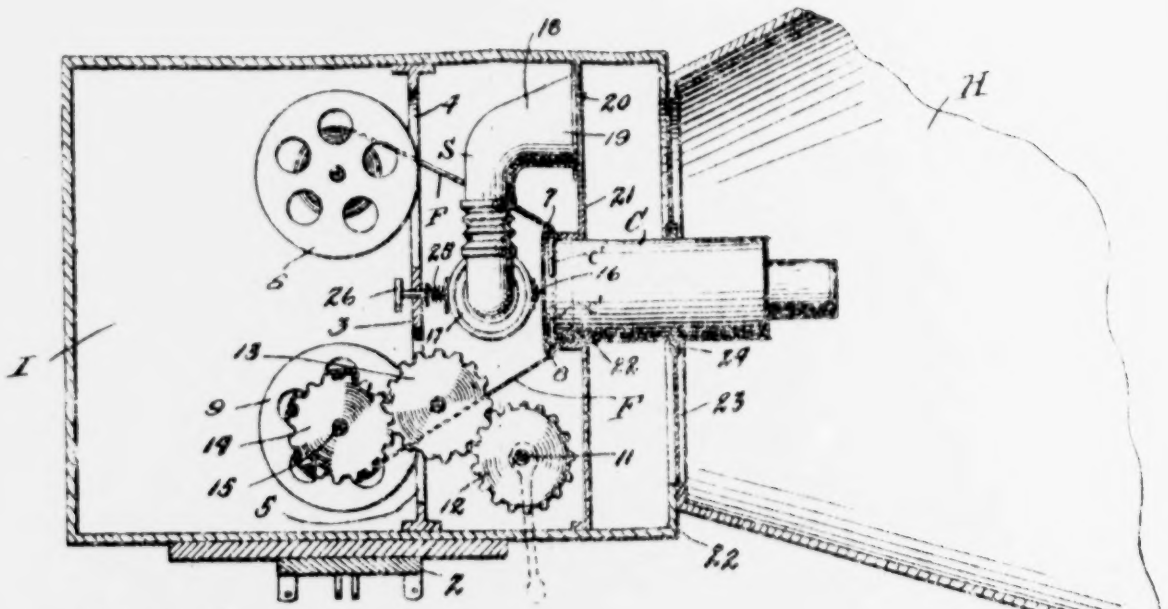

Fig. 1.

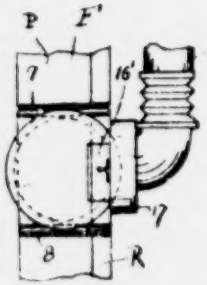

Fig 1a

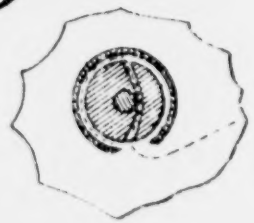

Fig. 5.

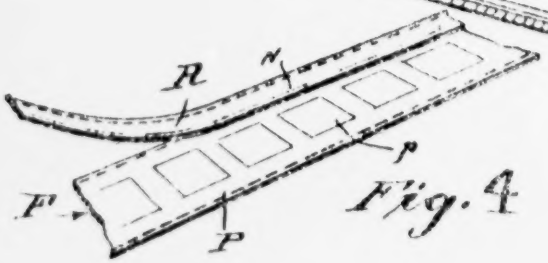

Fig. 4

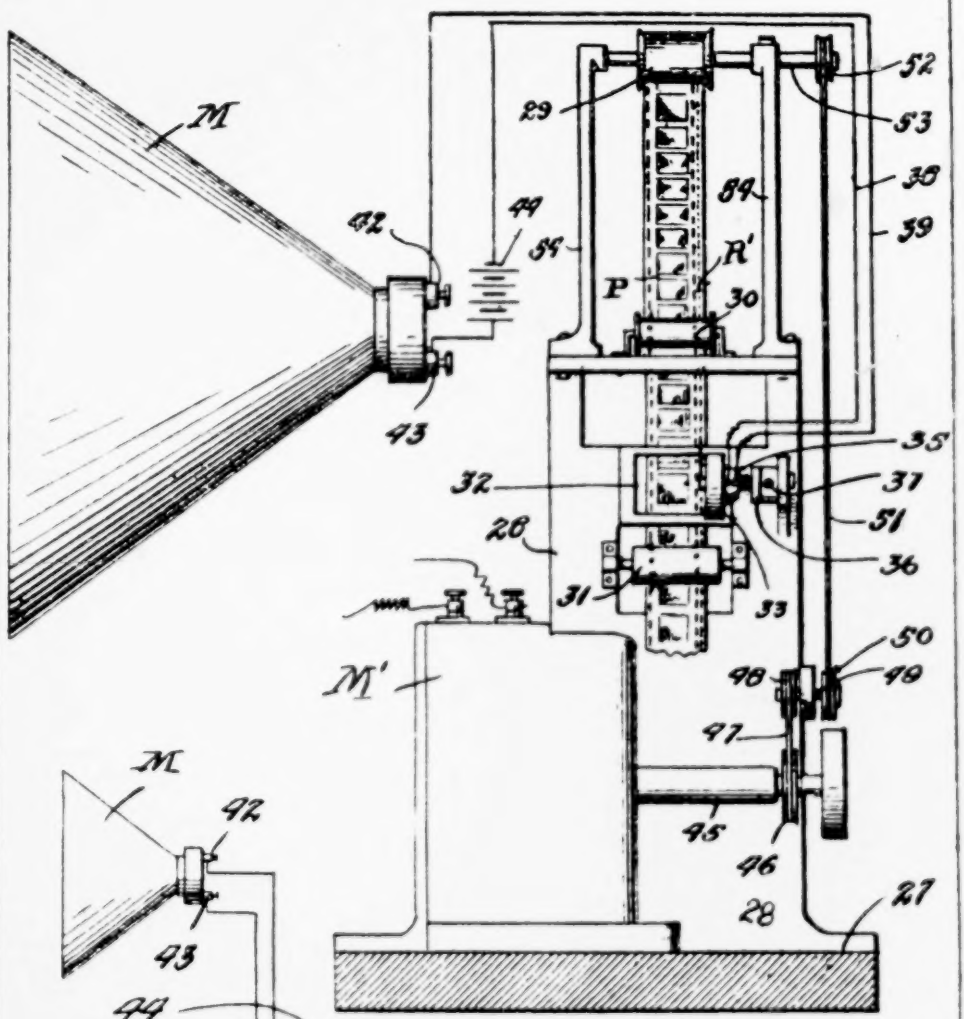

Fig. 2.

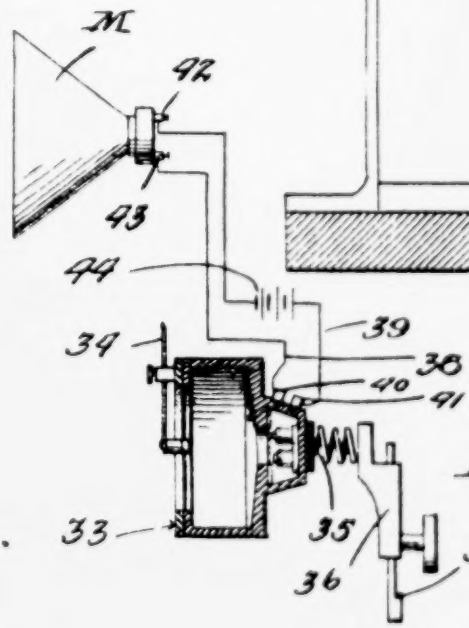

Fig. 3.

[This Drawing is a reproduction of the Original on a reduced scale.]

115,942

PATENT SPECIFICATION

Application Date, June 25, 1917. No. 9080/17.

Complete Accepted, May 30, 1918.

COMPLETE SPECIFICATION.

Method of Recording and Reproducing Simultaneously Movements and Sounds.

I, HANS PEDERSEN, of 3, Istedgate, Copenhagen, Denmark, Patent Agent, do hereby declare the nature of this invention and in what manner the same is to be performed, to be particularly described and ascertained in and by the following statement:—

This invention relates to a process for simultaneously recording—and for reproducing movements and sounds upon the film for taking the picture or scene. For this purpose the said film receives at the same time a photographic impression in the form of a wave-line which next is photographically transferred on to a metal band and then by an electrolytic process is caused to appear raised on the surface of the band so as to serve as matrix for impressing the sound-wave line on the rear of the finished positive film. At the reproduction of the cinematographic scene the fixed sound waves are by means of a stylus converted into corresponding oscillations of an electric current which through the medium of a membrane or through influence upon a flowing compressed air column or steam jet effects the reproduction of the sound

The apparatus for recording the sounds comprises two separate parts. Part 1 is electrically connected to part 2 which is mounted on the cinematograph camera.

Part 1 consist merely of a funnel and telephone transmitter with encased electric battery, and is connected to part 2 by a main and return conductor.

Part 2 the whole width of the cinematograph film is not utilized for taking the pictures there being left on an inner margin along the perforation of a small width or strip which remains unexposed and which serves for the reception of the sound-waves. A telephone receiver is encased in a thoroughly soundproof and padded capsule so as not to be influenced by extraneous sounds or by the noise produced by the working of the cinematograph. The centre of the membrane is connected with a small and light plate which is held over the said unexposed strip of the film. This plate has a very fine round aperture through which a ray of light falls on the reserved margin of the film. The plate performs side-ways movements corresponding to the oscillations of the membrane and during the advancing motion of the film beneath the aperture it receives an exposure which takes the form of a fine wave-line similar to that on a gramophone plate. In developing the film the wave-line becomes black.

TRANFERENCE OF THE SOUND WAVES ON TO THE POSITIVE FILM.

From the finished negative film the sound waves are first transferred on to a thin metal band. The latter is provided with a coat of lacquer all but a sma" strip which is coated with unexposed chromate-gelatine. This strip is then

exposed beneath the edge-strip or margin of the film, which is transparent all except the sound-wave line, the exposure rendering the chromate-gelatine all but the sound-wave insoluble. The latter is then washed out in warm water bath till the metallic sub-ground appears. Hereupon the metal band is placed in an electrolytic bath. As the band is protected up to the sound-wave line, the latter only receives a deposit of metal in the form of a raised ridge upon the metal band.

Thus prepared the metal band serves as matrix for impressing the sound-waves into the rear surface of the finished positive film by passing both together between rollers.

Producing.

The reproduction is effected on similar principles as the production. Here also is the apparatus divided into two parts. Part 1 is within the picture projecting apparatus and part 2 is near the picture screen. Part 1 converts the oscillations of a stylus-needle, which glides in the wave-line of the film, into corresponding fluctuations of an electric current which excites an electromagnet in part 2. Owing to the difficulty of properly guiding the needle or stylus it is not advisable to use a membrane for a good and loud reproduction of the sound. This is to be effected through the action upon a flowing column of compressed air or steam jet by causing the electromagnet to move a small slide or damper in a manner to impart sound fluctuations to the flowing air column.

It is to be mentioned that the recording of the sound waves should be done at a position where the film receives uniform motion, for example on the delivery drum or feed reel. Similarly, the needle of the reproducing apparatus glides on the winding drum or uniformly rotating transmitting drum. The sound waves appertaining to a picture screen on the negative are not arranged immediately at the side of same but are disposed alongside of a subsequent picture. At the impressing operation the proper displacement has to be effected.

The sound is exceedingly sensitive to variation in rotating speed as will be noticed in any gramophone, and it is necessary to obviate this specially during the producing and the reproducing operations by providing particularly large flywheels for example.

If the celluloid of the positive film be found unsuitable for the impressing of the sound-wave line it may be necessary to make the impression on some other suitable substance.

The chromate-gelatine layer on the metal band must be so thin as to be quickly acted upon by light through the whole thickness to the base. It is advantageously coloured blue so that the chemical action of the light is not weakened, and the sound-wave line clearly appears after the washing operation. To ensure that the needle of the reproducing apparatus receives proper oscillations it is necessary that the film should be well pressed down at the particular place by rollers and to be protected against lateral displacement.

The accompanying drawing shows one form of construction of the apparatus, by way of example, for carrying out the method.

Fig. 1 shows the recording device for the taking of the cinematograph picture and the wave-line, while

Fig. 2 shows the reproducing device, the film being in both cases omitted.

a, *a* (Fig. 1) is a part of the apparatus, on the right of the drawing is the outside and on the left thereof, the inside of the apparatus. *b* is the ratchet-drum of the film, moved at constant velocity. The box *c* provided at the outside encloses at the upper part a small incandescent lamp *d* and at the lower part the electromagnet *e*, with the iron diaphragm *f*.

From the centre of the diaphragm, a pin *g* leads through the wall *a* and carries at its end the little plate *h*, having a fine opening as previously mentioned.

Through the intervention of *g*, the plate *h* participates in the oscillations of the diaphragm *f* and thereby causes the beam of light from the shaft *i* to trace a wavy line on the film. The shaft *i* tapers downwards and is light-tight with exception of the fine opening in *h*. The rays from *d* are concentrated by the lens *k* and the mirror *l* reflects them at right angles downwards.

Fig. 2 is the toothed drum moved at constant velocity and 2 is the pin sliding in the wave line for reproduction of the sound. The holder 3 of the pin is similar to that of a sound box. 4 is an electrically-insulating part. The current flows over the microphonic contacts 5 comprising two fine pointed wire brushes touching each other. By the oscillations of 3 they are telescoped more or less whereby the resistance of the microphone 5 is increased and reduced so that oscillations of the current, flowing through the brushes, are produced which correspond to the engraved line of the sound waves on the film.

Having now particularly described & ascertained the nature of my said invention & in what manner the same is to be performed, I declare that what I claim is:—

The combined process for simultaneously recording (and for reproducing) movements and sound, which is characterized in that the process, by which a film for receiving the cinematographic picture serves also in recording sound waves by receiving a luminous impression in the form of a wave-line which is next photographically transferred onto a metal band and then by an electrolytic process is caused to appear raised on the surface of said band so as to serve as matrix for impressing the sound-wave on the rear of the finished positive film, is conjoint with the process for the reproduction of sound through a stylus in a wave line, and transferring its oscillations to an electric current which through the intervention of a membrane or through the influence of air or steam pressure reproduces the sound.

Dated this 25th day of June, 1917.

CHATWIN, HERSCHELL & Co.,
253, Gray's Inn Road, London, W.C. 1,
Patent Agents for the Applicant.

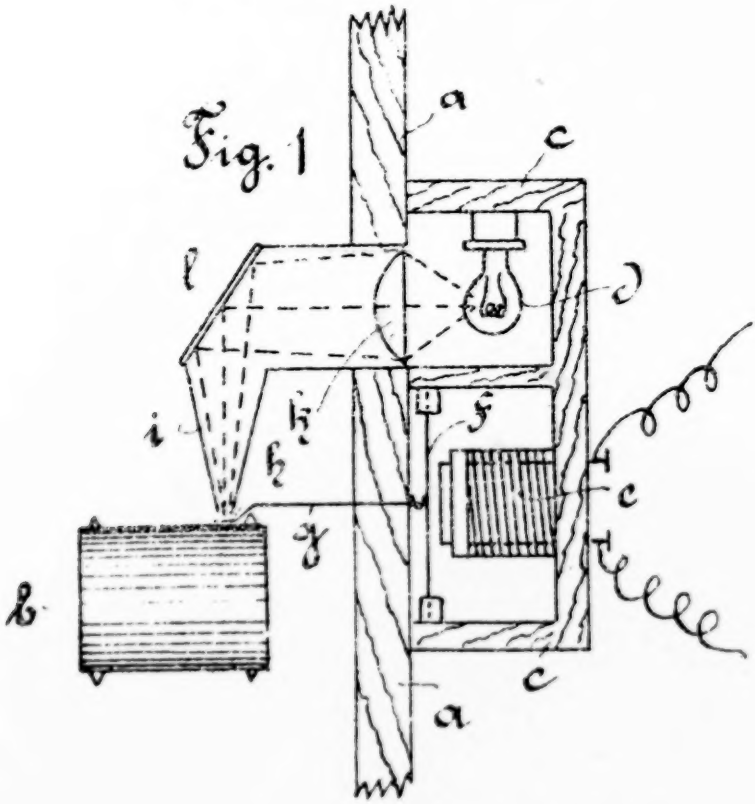

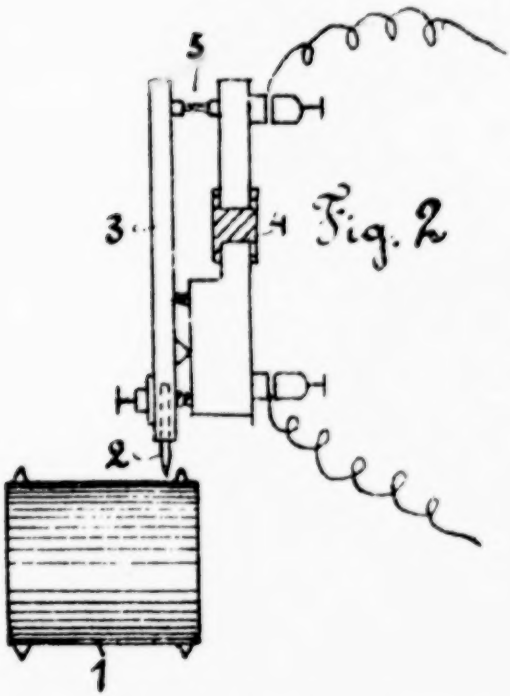

The Drawing is a full size reproduction of the Original

Malby & Sons Photo Litho

KAISERLICHES PATENTAMT.

AUSGEGEBEN DEN 20. JUNI 1914.

LIBRARY
JUL 17 1914
U. S. PATENT OFFICE

PATENTSCHRIFT

№ 275551

KLASSE 57c. GRUPPE 8.

JOHN EDWARD THORNTON IN ROCHESTER, V. ST. A.

Verfahren und Vorrichtung zum Herstellen kinematographischer Films für Bilder in natürlichen Farben.

Patentiert im Deutschen Reiche vom 22. Mai 1913 ab.

Für diese Anmeldung ist gemäß dem Unionsvertrage vom 2. Juni 1911 die Priorität auf Grund der Anmeldung in Großbritannien vom 23. Mai 1912 beansprucht.

Die Erfindung betrifft ein Verfahren und eine Vorrichtung zum Entwickeln und Fertigstellen kinematographischer Films in natürlichen Farben.

Stellt man kinematographische Films der gewöhnlichen einfarbigen Art her, die beispielsweise auf die übliche lichtempfindliche Bromsilberemulsion kopiert werden, so bietet es keine Schwierigkeiten, beim Entwickeln mit der gewünschten Schnelligkeit zu arbeiten und im richtigen Augenblick den Vorgang zu unterbrechen.

Man geht dann in der Weise vor, daß man den Film in Entwicklungs-, Fixier- und Waschbäder einführt, sie genügend lange durch sie hindurch- und dann wieder hinausführt.

Handelt es sich aber darum, Films für Bilder in natürlichen Farben herzustellen aus Aufnahmen der Art, wie sie das Verfahren der deutschen Patentschrift 275320 beschreibt, so versagen die bekannten Entwicklungsmethoden, da hier Teilbilder auf einem übernormal breiten Film nebeneinander vorhanden sind.

Die verschiedenen Teilbilder werden nach dem Verfahren der erwähnten Erfindung gleichzeitig auf einen Bichromat-Gelatinefilm kopiert und entwickelt, und zwar wird jede Bildreihe mittels eines Entwicklers in einer bestimmten Farbe entwickelt oder mit einer Farbe angefärbt. Die verschiedenen Entwickler oder Farbstoffe müssen nun auf den Film möglichst gleichzeitig zur Anwendung gebracht werden, gleichwohl aber voneinander getrennt gehalten werden; auch ist zu berücksichtigen, daß einige der Flüssigkeiten länger angewandt werden müssen als andere, damit man die notwendige Farbdichte erhält; infolgedessen muß Vorsorge getroffen werden, daß der Operateur die Behandlung eines Streifens unterbrechen kann, während die Behandlung eines der anderen Streifen [illegible]h fortgesetzt wird.

Es handelt sich demnach bei der Erfindung darum, einen bewegten Film von übernormaler Breite, der mit zwei, drei oder mehr Reihen von Bildern exponiert ist, oder auf den solche Bilderreihen kopiert worden sind,

1. einem Waschprozesse zu unterwerfen mittels dessen alle löslichen Bestandteile aus dem Film ausgewaschen werden,

2. einem derartigen, sich, wie erwähnt, kontinuierlich bewegenden Film die Entwicklungsfarben zuzuführen, und zwar eine besondere Farbe bzw. einen besonderen Entwickler für jede Reihe von Teilbildern, derart, daß jede Farbe in scharf abgegrenzter

275 551

Breite aufgebracht wird, ohne daß die Farben sich überdecken,

3. hierbei dafür Sorge zu tragen, daß die Aufbringung jeder der Farben bzw. eines jeden Entwicklers aufhört, wenn die Entwicklung genügend vorgeschritten ist,

4. Maßnahmen zu treffen, um den Überschuß an Entwickler nach Beendigung der Entwicklung zu entfernen, ohne daß hierbei eine Befleckung des Films stattfindet,

5. den Film durch Anwendung von Härtungslösungen fertig zu machen,

6. den Film zu trocknen,

7. den Film mit einem Überzug zu versehen und

8. schließlich ihn zum Trocknen fertigzustellen und aufzurollen.

In der Zeichnung ist beispielsweise eine Ausführungsform einer Vorrichtung, die diesen Ansprüchen gerecht wird, beschrieben.

Fig. 1 zeigt eine Seitenansicht einer derartigen Vorrichtung, teilweise im Schnitt;

Fig. 2 ist eine Vorderansicht, teilweise im Schnitt;

Fig. 3 ist eine schaubildliche schematische Darstellung der Vorrichtung;

Fig. 4 zeigt eine besondere Ausführungsform eines Teiles der Vorrichtung, eine Rolle für die Films mit konischen Absätzen.

Bei der Vorrichtung sind ein Paar sehr lange Walzen *A* und *B* vorgesehen, die in einem Rahmen *C* montiert sind. Um die Walzen ist der Film *D* herumgewunden, so daß er schraubenförmig von der einen zur anderen wandert. Jede Walze ist mit einer Reihe von Flanschen *a* und *b* versehen, um die einzelnen Filmteile voneinander zu trennen und zu verhindern, daß sie übereinander geraten sowie um zu bewirken, daß der Film von einem Ende der Maschine zum anderen gelangt. Die Walzen *A* und *B* können zwischen den Flanschen zylindrische Form besitzen, sie können auch leicht konisch ausgebildet sein, wie dies Fig. 4 erkennen läßt.

Unter der Rolle *B* sind Tröge *E* angeordnet, die dem Zwecke dienen, die Wasch-, Entwicklungs-, Fixier-, Beiz- oder anderen Flüssigkeiten aufzunehmen. In den Trögen sind in bekannter Weise Walzen *e* angeordnet, welche die Flüssigkeit auf den Film bringen, wenn sie durch den bewegten Film gedreht werden. Die Walzen *e* können aus Holz, Metall oder anderem Material bestehen. Sie sind mit einer aufsaugenden Masse überdeckt.

Handelt es sich darum, die Waschflüssigkeit auf den Film zu bringen, so kann die Walze *e* so breit sein wie der Film (da alle (re- oder mehr) Farbenreihen gleichzeitig gewaschen werden können. Dient die Walze aber dem Aufbringen der Farbe oder des Entwicklers bzw. der Beiz- oder Fixierflüssigkeit, so darf die Walze oder Rolle *e* in dem Trog *E* nur so breit sein wie ein Teilstreifen. Die Tröge können, wie Fig. 3 erkennen läßt, zwei Abteilungen enthalten, damit man entweder dieselbe Farbe von zwei Stellen her zuführen kann, oder zwei verschiedene Farben oder vielleicht auch eine Farbe und eine Beize.

Zwischen den Walzen *A* und *B* kann eine Platte *F* angeordnet sein, über welche der Film *D* wandert. In der Tafel *F* kann man dann eine Füllung aus Glas *f* vorsehen, hinter der eine Lampe *G* angeordnet ist, so daß der Film beleuchtet wird und man das Fortschreiten der Behandlung leicht beurteilen kann. Längsseitig kann man farbige Streifen *H* anbringen, die den Zweck haben, die Intensität der Färbung leicht feststellen zu können.

Wie die Zeichnung erkennen läßt, können die Walzen *A* und *B* so angeordnet sein, daß der Film in gegen die Horizontale geneigter Bahn sich bewegt. Man kann sie auch so stellen, daß der Film sich horizontal oder vertikal bewegt.

Die Tröge *E* und Walzen *e* müssen so angeordnet sein, daß letztere leicht außer Kontakt mit dem Film gebracht werden können, wenn nämlich genügend Flüssigkeit auf diesen aufgebracht oder genügend Farbe von ihm absorbiert worden ist.

Die Einrichtung nach Fig. 1 zeigt zwei Tröge, die um eine Achse c^1 auf und ab geschwungen werden können. Eins der Gefäße kann Farbe, das andere Beize oder Fixierflüssigkeit enthalten. Kippt man den unteren Trog, so daß die untere Walze *e* die Berührung mit dem Film verliert, so wird die Walze des oberen Troges mit ihm in Berührung gebracht. Die Stütze *e*, die die beiden Gefäße trägt, ist mit einem Schlitz c^3 versehen, dergestalt, daß beide Walzen mit dem Film außer Kontakt kommen, wenn die Gefäße nach hinten zurückgeschoben werden. Jede beliebige andere Bewegungsanordnung kann dazu dienen, um den in Bewegung befindlichen Film mit den Walzen außer Kontakt zu setzen.

Man kann naturgemäß statt mit Walzen und Flüssigkeitsbehältern die einzelnen Flüssigkeiten auch in anderer Weise auf den Film aufbringen, z. B. durch Besprengen oder Aufwischen oder in sonst geeigneter Weise.

Bei einer anderen Ausführungsform der Vorrichtung befindet sich die Flüssigkeit nicht in einem Gefäße. Man läßt sie vielmehr aus einer feinen Öffnung direkt auf die die Flüssigkeit aufsaugende Walze laufen oder man saugt sie aus einem Vorratsraum mittels eines [illegible] Filz o. dgl. an, das mit der Walze in Berührung steht.

275551

Dort, wo es der Raum gestattet, kann der Film über eine lange Tafel hinweggehen, und es können dann die Wasch-, Entwicklungs- und Fixiervorrichtungen längs dieser Tafel in geeigneten Abständen angebracht sein.

Patent-Ansprüche:

1. Verfahren zum Herstellen kinematographischer Films für Bilder in natürlichen Farben, dadurch gekennzeichnet, daß Films von mehrfacher Breite, die zwei oder drei Teilbilderstreifen nebeneinander tragen, gleichzeitig streifenweise mit Flüssigkeiten behandelt werden.

2. Vorrichtung zum Ausüben des Verfahrens nach Anspruch 1, dadurch gekennzeichnet, daß jede der einen Teilstreifen behandelnden Vorrichtungen so angebracht ist, daß sie für sich allein außer Tätigkeit gesetzt werden kann.

3. Vorrichtung zum Ausüben des Verfahrens nach Anspruch 1, gekennzeichnet durch zwei Walzen (*A* und *B*), welche so gestaltet sind, daß der Film schraubenförmig läuft, in Verbindung mit in der Bahn des Films liegende Walzen (*e*) o. dgl., die dem sich bewegenden Film in seinen einzelnen Teilen die notwendigen Flüssigkeiten zuführen.

4. Vorrichtung nach Anspruch 3, bei welcher in der Bahn des Films eine erhellte Glasunterlage (*f*) o. dgl. angeordnet ist, über welche der Film hinweggeführt ist, um feststellen zu können, ob die Behandlung der einzelnen Bildstreifen bis zum gewünschten Grade vorgeschritten ist.

Zu der Patentschrift 275551

Fig. 1.

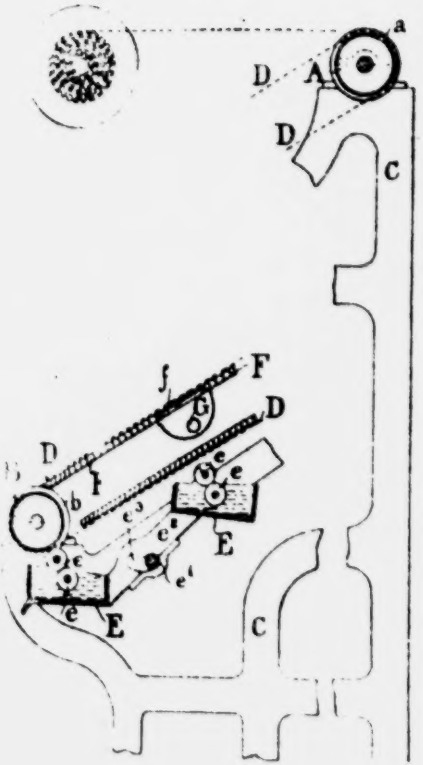

Fig. 2.

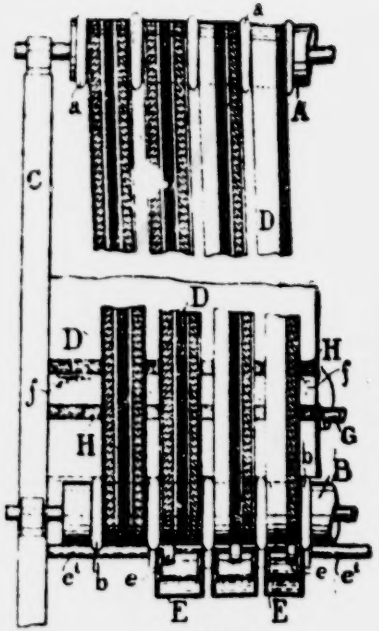

Fig. 4

Fig. 3.

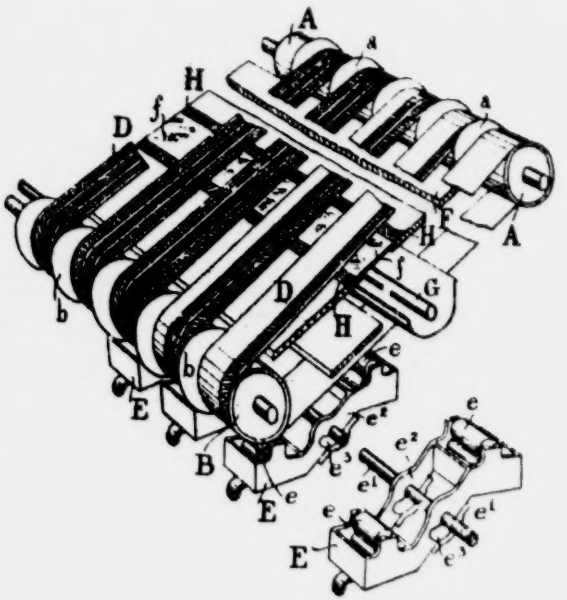

Defendant's Exhibit G. 2737

TRANSLATION FROM GERMAN.

B'M

German Patent Office

LETTERS PATENT
No. 275551

Published on:
June 20, 1914.

Class 57c. Group 8.

JOHN EDWARD THORNTON IN ROCHESTER, UNITED STATES OF AMERICA. 2738

Process and device for the making of motion picture films for pictures in natural colors.
Patent in Germany as from May 22, 1913.

For this application, in accordance with the Union Treaty of June 2, 1911, priority is claimed on basis of the application in Great Britain as from May 23, 1912.

2739

The invention refers to a process and a device for the developing and finishing of motion picture films in natural colors.

If motion picture films of the common single color (black and white) kind are made, which, for instance, are copied on the customary light-sensitive silver bromide emulsion then no difficulties are encountered in proceeding with the developing with the desired speed, and in interrupting the process at the correct moment.

One proceeds, in this connection, in the manner that the film is introduced into the developing, fixing, and washing bath, passing it through

2740 *Defendant's Exhibit G.*

same for a sufficiently long time, and then again withdrawing it from same.

If there are, however, concerned films for pictures in natural colors, made from negatives of the kind described in the process of the German Patent 275320, then the well known developing methods can no longer be used, inasmuch as there are concerned here partial images arranged alongside of each other on a film of unusual width.

2741 The various partial images, in accordance with the process of the said invention, are simultaneously printed and developed on a bi-chrome gelatine film, each row or series of images being developed by means of a developer in a definite color or colored with one color. The different developers or colors or dyestuffs must be applied to the film, if possible, simultaneously, but must, nevertheless, be kept separate from each other; it must be also taken into consideration that some of the liquids must be applied for a longer period of time than other liquids, so that one ob-

2742 tains the required color density; on account of this, it must be seen to it that the operator can interrupt the treatment of a strip, while the treatment of one of the other strips is continued.

In the case of this invention and in connection with a moved film of exceptional width, with two, three or more rows of images exposed, or on which such rows of images have been copied, there is concerned here the question of:

1. subjecting same to a washing process by means of which all soluble constituents are washed out of the film;

2. bringing to such a film—which, as mentioned, is continuously moved—the developing colors,

2743

namely, a special color or a special developer for each row of partial images, in such a manner that each color is applied in a sharply limited width (extent), without the colors overlapping each other;

3. seeing to it, in this connection, that the application of any of the colors or of any developer stops when the developing process has progressed to a sufficient extent;

4. taking steps in order to remove the excess developer after the termination of the developing, without there taking place in this connection a spotting of the film;

2744

5. completing the film by the application of hardening solutions;

6. drying the film;

7. providing the film with a coating; and

8. finally, completing it for drying, and rolling it up.

In the drawing there is shown, by way of example, a device which complies with these requirements.

2745

Fig. 1 is a side elevation of such a device, partly in section;

Fig. 2 is a front view, partly in section;

Fig. 3 is a diagrammatic view of the device;

Fig. 4 is a special manner of execution of a part of the device, *i. e.*, a roller for the film with conically set off sections.

In connection with the device, a pair of very long rollers A and B is provided, which are mounted in a frame C. Around the rollers there is wound the film D so that it travels in a hellical manner from one roller to the other. Each roller

2746 *Defendant's Exhibit G.*

is provided with a row of flanges a and b, in order to separate the individual film parts from each other, and in order to prevent that they overlap or get on top of each other, so that the film reaches from one end of the apparatus to the other. The rollers A and B can be of cylindrical shape between the flanges; they can also be developed in a slightly conical or tapering manner as shown in Fig. 4.

Under the roller B there are arranged the
2747 trays E for the purpose of receiving the washing, developing, fixing, staining (mordant) or other liquids. In the trays there are arranged the rollers e which bring the liquid to the film, if they are turned by the moved film. The rollers e can be made of wood, metal or other material. They are covered with an absorbing mass.

If it is a question of applying the washing liquid to the film, then the roller e can be as broad as the film, inasmuch as all three (or more) color rows can be washed simultaneously. If the roller, however, is used for the application of the color
2748 or of the developer or of the mordant or fixing liquid, then the roller e, in the tray E, must only be as broad as a partial strip. The trays as shown in Fig. 3, can contain two compartments so that one can feed either the same color from two sides, or two different colors, or, possibly, also one color and one mordant.

Between the rollers A and B there can be arranged a plate F, over which the film D travels. In the plate or table F there can also be arranged a glass frame f, in the back of which a lamp G is arranged, so that the film can be illuminated, and so that the progress of the treatment can easily be judged. Colored strips H can

be arranged alongside, for the purpose of easily ascertaining the intensity of the coloring.

As the drawing shows, rollers A and B can be arranged in such a manner that the film moves in a path which is inclined with respect to the horizontal. One can also adjust them in such a manner that the film moves horizontally or vertically.

The trays E and the rollers e must be arranged in such a manner that the latter can be easily brought out of contact with the film, *i. e.*, when sufficient liquid has been applied to same, or if sufficient color has been absorbed by it. 2750

The device in accordance with Fig. 1, shows two trays, which can be swung up and down around a shaft e^1. One of the receptacles can contain the color, while the other can contain the fixing liquid. If one tips the lower tray so that the lower roller e comes out of contact with the film, then the roller of the upper tray is placed in contact with it. The support e, which carries the two receptacles, is provided with a slit e^3 so that both rollers come out of contact with the film, if the vessels are pushed rearward. Any desired other moving arrangement can be used in order to place the moving film out of contact with the rollers. 2751

It is, of course, also possible to apply the individual liquids—instead of with rollers and liquid receptacles—also in a different manner on the film, for instance, by spraying or rubbing on or in any other suitable manner.

In connection with another manner of execution of the device, the liquid is not contained in a receptacle. It is, rather, let to flow out of a fine opening directly on the roller which absorbs the liquid, or the liquid is absorbed from a storage

2752 *Defendant's Exhibit G.*

receptacle by means of a piece of felt or the like, which is in contact with the roller.

Where there is sufficient space, the film can pass over a long table, and in such a case the washing, developing and fixing devices can be arranged alongside of this table at suitable distances.

PATENT CLAIMS.

1. Process for the making of motion picture films for pictures in natural colors, having the
2753 distinctive feature that films of multiple width which carry two or three partial image strips alongside of each other, are treated with liquids simultaneously and in strips.

2. Device for the carrying out of the process in accordance with Claim 1, having the distinctive feature that each one of the devices treating a partial strip, is arranged in such a manner that it can be disconnected separately.

3. Device for the carrying out of the process in accordance with Claim 1, characterized by two
2754 rollers (A and B), which are arranged in such a manner that the film runs helically in connection with rollers (e) or the like arranged in the path of the film, which rollers feed the necessary liquids to the moving film in its individual parts.

4. Device in accordance with Claim 3, in connection with which there is arranged in the path of the film an illuminated glass plate or window (f) or the like, over which the film is guided, in order to ascertain whether the treatment of the individual image strips has progressed to the desired degree.

Hereto attached 1 sheet of drawings.

KAISERLICHES PATENTAMT

AUSGEGEBEN DEN 22. OKTOBER 1914.

MAR. 23 1915

PATENTSCHRIFT

Nr 279598

KLASSE 42g. GRUPPE 12.

FRIEDRICH REIMER IN NEUKÖLLN.

Verfahren zur Herstellung eines Films, der aus einem Bildband und einem Tonband besteht.

Patentiert im Deutschen Reiche vom 26. August 1913 ab.

Gegenstand der vorliegenden Erfindung bildet ein Verfahren, nach welchem Lichtbildstreifen, wie sie zur Projizierung kinematographischer Aufnahmen dienen, mit synchron angeordneten Schallwellenstreifen vereinigt werden.

Es ist bereits versucht worden, Lichtbildfilms direkt mit Schallwellenaufzeichnungen auszustatten, doch haben die Versuche zu keinem Resultat geführt, weil die Herstellung von langen Streifen mit Schallwellenaufzeichnungen zu kompliziert war, z. B. für das Einschneiden der Schallkurve in das Material eine straffe Führung des Bildbandes erforderte, das doch für die Aufnahme der Bilder leicht fortschaltbar sein mußte usw., weshalb man auch von dieser Anregung abgegangen und in der Hauptsache das synchrone Zusammenspiel von Bild und Schall durch Einschaltung von Zwischenmitteln zwischen den Apparaten zu erreichen sucht.

Nach dem neuen Verfahren wird die Herstellung des Schallwellenbandes von der des Bildfilms getrennt und beide erst nach der Fertigstellung vereinigt. Hierdurch wird die Herstellung von Bildstreifen, die sowohl Tonbilder wie Lautzeichen enthalten, erst ermöglicht. Die Herstellung des Tonbandes erfolgt z. B. in bekannter Weise von einer Schallwellenwalze oder Platte, indem ein galvanischer Abzug hergestellt wird, von dem wiederum die erforderlichen Nachbildungen durch galvanischen Niederschlag, Pressen o. dgl. genommen werden können, worauf die so gewonnenen Abzüge, wie ebenfalls bekannt ist, in Streifen geschnitten und erfindungsgemäß durch geeignete Mittel mit dem Filmband verbunden werden. Da die Aufnahmegeschwindigkeit der Apparate für Bild und Schall eine gleiche ist bzw. durch vorherige Berechnung die Bahn des Filmbandes mit der der Schallwellenkurve festgestellt werden kann, kann ein vollkommen gleichmäßiges Zusammenspiel erreicht werden, wie es durch Einschaltung von Zwischenmitteln zwischen den Wiedergabeapparaten nicht möglich ist.

Oder man verfährt in folgender Weise:

Bei der Aufnahme des Films wird gleichzeitig ein phonographischer oder grammophonischer Aufnahmeapparat in Betrieb gesetzt, dessen entsprechend große Walze oder Platte genau dieselbe Weggeschwindigkeit aufweist wie der zur Aufnahme gelangende Film. Nachdem die Doppelaufnahme stattgefunden, wird von der Walze oder Platte ein galvanischer Niederschlag (Negativ) genommen, von dem nun beliebige Abzüge (Positive) durch galvanischen Niederschlag oder Pressung gemacht werden können. Die so gewonnenen Positive werden nun zwischen den Schallwellenkurven aufgeschnitten, welche zu diesem Zwecke bei der Aufnahme entsprechenden Zwischenraum erhalten, und wird das Schallwellenband mit dem Lichtfilm durch irgendein an sich bekanntes Mittel verbunden. Die Schallwellenwalze wird sich hierzu besser eignen, da das aufgeschnittene Band ein gerades Band ohne Kurve ergibt, doch können auch aufgeschnittene Platten Verwendung finden, da die Bänder eventuell mit der Schallwellenkurvenfläche im Winkel zu der Lichtbildoberfläche vereinigt werden können.

279598

Es können auch bereits fertige Films mit dem Schallwellenband vereinigt werden, indem man während der Vorführung des Films einen Aufnahme-Sprechapparat in Betrieb setzt, der die gleichzeitig mit den Projektionsbildern durch die Akteure hervorgebrachten Laute aufpimmt.

PATENT-ANSPRUCH:

Verfahren zur Herstellung eines Films, der aus einem Bildband und einem Tonband besteht, dadurch gekennzeichnet, daß jedes Band als Einzelband für sich hergestellt und beide Bänder dann miteinander vereinigt werden.

Defendant's Exhibit G. 2761

Translation from German
B'M

Imperial German Patent Office
LETTERS PATENT
No. 279598

Issued on:
October 22, 1914.

Class 42 g. Group 12

2762

FRIEDRICH REIMER IN NEUKOLLN.

Process for the making of a film which consists of an image band and sound band.

Patented in Germany as from August 26, 1913.

The subject matter of the invention under consideration here is a process in accordance with which image strips or bands, as used for the projecting of motion picture exposures, are combined with synchronously arranged sound wave strips. 2763

It has already been tried to provide image films directly with sound wave recordings, but the experiments have not led to any result for the reason that the production of long strips with sound wave recordings was too complicated, for instance, for the reason that for the cutting or engraving of the sound curve into the material, there was required a taut guiding of the image film which, on the other hand, for the taking of

2764 *Defendant's Exhibit G.*

the images, had to be arranged in such a manner that it could easily be advanced, etc. This is also the reason why this suggestion was not followed up any further and why it is attempted to bring about the synchronous operation of picture and sound, namely, by the insertion of intermediate means between the apparatus.

In accordance with the new process, the production of the sound wave band is separated from the production of the image film, and both are
2765 only combined after their completion. In this way there is first made possible the production of film strips containing both images and sound records. The production of the sound band is made, for instance, in the well known manner, from a cylinder record or disc record in the manner that a galvanic copy is made from which, in turn, the necessary copies are made by galvanic deposits, pressing or the like, whereupon the copies thus made, in the manner which is also known, are cut into strips and, in accordance with the invention, are connected by suitable means
2766 with the film band. As the recording speed of the apparatus for image and sound is the same, or as, by a previous computation, the path of the film band with that of the sound wave curve can be ascertained, there can be obtained an absolutely uniform synchronization which is not possible by the insertion of intermediate agents between the reproduction apparatus.

Or, otherwise, the process can be carried out in the following manner:

During the recording of the film, there is at the same time placed in operation a phonographic or gramaphonic recording apparatus, the cylinder or disc record of which, which is to be of corre-

sponding size, has the same travelling speed as the film to be taken. After the double recording has taken place, a galvanic deposit (negative) is taken of the cylinder or disc record from which now any desired number of copies (positives) can be made by galvanic deposit or pressing. The positive thus obtained are now cut between the sound wave curves which, for this purpose, during the recording, receive a corresponding intermediate space, and the sound wave band is connected with the image film by any suitable means 2768
known per se. The sound wave cylinder will be more suitable for this purpose, inasmuch as the cut band will result in a straight band without curve, but also cut discs can be used inasmuch as the bands can if necessary be combined with the sound wave curve surface at an angle to the image surface.

Furthermore, already finished films can be combined with the sound wave band by starting during the demonstration of the film, a recording phonograph which simultaneously with the projected images, records the sound made by the 2769
actors.

PATENT CLAIM.

Process for the making of a film which consists of an image band and a sound band having the distinctive feature that each band is made as an individual band separately and that both bands are thereupon combined with each other.

RÉPUBLIQUE FRANÇAISE.

OFFICE NATIONAL DE LA PROPRIÉTÉ INDUSTRIELLE.

BREVET D'INVENTION.

XII. — **Instruments de précision, électricité.**
2. — Appareils de physique et de chimie, optique, acoustique.

N° 448.757

Cinématographe parlant.

M. Ignatius Hubert MacCARTY résidant aux États-Unis d'Amérique.

Demandé le 26 septembre 1912.
Délivré le 5 décembre 1912. — Publié le 10 février 1913.

La présente invention se rapporte à des vues animées parlantes, et a pour objet l'obtention de moyens pour enregistrer et reproduire simultanément des sons et des mouvements par l'enregistrement des uns et des autres sur un film photographique sensible.

L'invention est plus complètement décrite ci-après en référence au dessin annexé dans lequel :

La fig. 1 est une vue schématique montrant le mécanisme enregistreur.

La fig. 2 est une vue similaire montrant les moyens employés pour reproduire les sons et mouvements enregistrés.

La fig. 3 est une vue de détail du film.

Cette invention est relative à un cinématographe combiné avec un photographophone et son objet est de produire des vues animées parlantes.

L'invention consiste en des moyens pour produire un enregistrement photographique continu de sons parlés ou autres, sur un côté d'un film sensible, simultanément avec la prise de vues animées de ceux qui les émettent, celles-ci étant enregistrées sur l'autre côté du film. Ceci étant posé, l'objet de l'invention est de produire un film sur lequel les deux enregistrements se déroulent parallèlement ou côte à côte d'une manière continue.

L'invention vise en outre la production de moyens pour reproduire les sons et les vues enregistrés.

La fig. 1 montre la partie de l'appareil qui est employée pour l'enregistrement des vues animées et des sons. Les sons enregistrés sur le film sensible sont produits par ce qui est connu en termes techniques sous le nom d'arc chantant, lequel est produit par les vibrations reçues d'un transmetteur. Le fonctionnement de cette partie de l'appareil est le suivant :

A représente le film qui est placé dans une chambre noire de construction habituelle, employée en photographie. Deux rouleaux sont placés dans la chambre noire et le film photographique est déroulé de l'un sur l'autre avec une vitesse constante. Les rouleaux peuvent être commandés par tous moyens appropriés comme par un moteur électrique ou une manivelle, qui les actionnent à une vitesse telle que le film ait un déplacement de plusieurs mètres par seconde. Le film se déplace devant une lentille cylindrique 3 qui y concentre la lumière de l'arc B. Le film est ensuite enlevé de l'appareil et développé et fixé de la manière habituelle; le film terminé montre les variations de lumière juste en proportion de leur amplitude.

La fig. 3 montre une partie du film. Les bandes claires et sombres 4 et 5 alternatives qui donnent l'aspect de grande irrégularité.

sont en réalité excessivement régulières et en harmonie, seulement leur ordre change avec le changement correspondant des sons de la parole. Chaque son donne son groupe particulier de lignes et peut être aisément reconnu et lu sur le film photophonographique.

Les intensités de lumière de l'arc chantant B sont produites par le transmetteur C, ainsi que l'indique le schéma de la fig. 1.

5 indique une génératrice de courant continu qui est connectée par un fil 6 à l'une des bornes de l'arc B. L'autre pôle de la génératrice est connecté par un fil à l'une des bornes d'une bobine de réactance 7; l'autre borne de cette bobine est connecté par un fil 8 à la borne opposée de l'arc chantant.

Ceci complète le circuit à travers l'arc chantant et la génératrice, ce qui produit un arc constant.

Afin de faire varier la lumière de l'arc ou de faire changer son intensité dans le but d'enregistrer des ondes sonores, on intercale le transmetteur C, monté dans un circuit en dérivation qui est relié avec les bornes opposées 9 et 10 de la bobine de réactance et est muni d'une résistance variable 11, à l'aide de laquelle la quantité de courant passant par le transmetteur peut être réglée. La lumière de l'arc B dépend des variations de l'intensité de lumière qui sont proportionnelles à la quantité de courant qui est passée par le circuit shunt dans lequel le transmetteur est intercalé. Il est bien connu des hommes du metier, que quand on parle dans un transmetteur, les ondes sonores frappent sur le diaphragme de celui-ci avec une intensité variable. Ces vibrations du diaphragme du transmetteur produisent des fluctuations dans la force du courant qui y passe. Ces fluctuations du courant affectent le courant qui alimente l'arc, ce qui cause des fluctuations dans l'intensité des rayons lumineux, ces variations de lumières sont enregistrées sur le film sensible, comme représenté dans la fig. 3, la lumière intense produisant les lignes sombres en travers du film. On voit ainsi que la voix humaine ou les ondes sonores qui frappent sur le diaphragme d'un transmetteur affectent l'intensité de la lumière de l'arc B, qui à son tour enregistrée sur le film sensible et produit ce qui est connu sous le nom de phonogramme.

En produisant un phonogramme ou film de cette nature, il est nécessaire d'employer le type d'appareil photographique ou cinématographique dans lequel le film se déplace à une vitesse constante, tandis que le côté 12 du film qui prend les vues animées des acteurs ou côté du film représentant la partie cinématographique de l'appareil, nécessite l'emploi d'une lentille à éclipse 13.

De ce qui précède on voit qu'une vue animée parlante est produite en combinant les vues cinématographiques et les enregistrements photophonographiques sur un même film: la nouveauté du système consiste à enregistrer la parole ou des sons et les vues animées sur le même film. A l'aide de ces moyens les enregistrements de la voix et des vues animées sont toujours en synchronisme ce qui est très nécessaire comme cela a été prouvé par l'expérience.

Il arrive souvent qu'en enroulant le film dans une machine, certaines de ses parties sont endommagées, ce qui rend nécessaire d'en couper ou d'en enlever certaines parties. Une difficulté que l'on a rencontrée jusqu'ici avec les cinématographes parlants, dans lesquels on emploie des enregistrements phonographiques en combinaison des vues animées est le fait que si une portion du film est enlevée, pour n'importe quelle raison, aucun procédé pratique n'existe pour effacer les sons phonographiques correspondants qui accompagnent cette portion particulière de la vue animée. Ceci produit les résultats suivants:

Par exemple, si une section du film montre un homme se frottant la tête et que le phonographe marchant synchroniquement dise «Oh! ma tête», si on enlève cette section montrant l'homme se frottant la tête sur la vue animée et si on reproduit à nouveau l'image, quand le phonographe arrive à ces mots, l'homme peut se frotter la cheville. Cela produit des effets ridicules et rend le film sans valeur.

Cette difficulté est entièrement supprimée quand les enregistrements photographiques des sons et des vues animées sont combinés sur un film unique. Si une partie quelconque du film est endommagée et enlevée, les sections correspondantes des enregistrements phonographiques et cinématographiques sont nécessairement enlevées en même temps.

Comme l'arc chantant n'est pas nouveau, on ne revendique aucun arrangement parti-

culier de la source de lumière, car il est bien connu que différents arrangements ont été faits, à l'aide desquels les variations de lumière peuvent être produites; ces variations étant effectuées en faisant passer un courant électrique dans un transmetteur. A la place de l'arc chantant représenté ici, la lumière du soleil ou autre lumière peut être employée, en la disposant de telle sorte qu'elle tombe sur un diaphragme du transmetteur, qui peut être un miroir, un verre argenté, une membrane de mica, de sorte que les rayons lumineux soient réfléchis ou projetés sur le film sensible; il est bien entendu que les ondes sonores peuvent être enregistrées sur le film par différents procédés.

La fig. 2 est une vue schématique montrant un moyen employé pour reproduire les sons et les vues animées enregistrés sur le film sensible. Pour reproduire ceux-ci, on déplace le film dans le même sens que celui où il a été pris et avec la même vitesse derrière l'objectif de l'appareil de projection, tandis que la lampe de l'arc B, d'intensité de lumière constante, est alors employée comme source d'éclairage.

En regard du film on fixe un élément de pile au sélénium 14 qui est connecté en série avec une pile à élément sec 15 et avec un récepteur ou autre dispositif reproducteur des sons 16. Quand le film passe devant l'arc, les rayons de celui-ci projetés à travers le film sur la pile au sélénium varient suivant les lignes ou parties sombres et claires du film, comme représenté dans la fig. 3. Le sélénium est une substance dont la résistance augmente ou diminue suivant les variations de la lumière à laquelle elle est exposée; ces variations de lumière produisent des variations correspondantes dans le flux du courant qui passe par la pile au sélénium et au moyen du circuit shunt contenant le condensateur et le récepteur reproduit les paroles ou autres sons articulés. Simultanément avec la production ou le changement du son sur le film, la section du film ayant l'image cinématographique est projetée sur l'écran et ainsi reproduite.

Le circuit électrique passant par la pile au sélénium et le récepteur peut avoir le tracé suivant :

D'un des pôles de la pile au silénium 14, un fil 17 conduit à une borne d'une bobine de réactance 18 et de l'autre borne de cette bobine un fil 19 conduit à une borne d'une pile 15. De l'autre borne de la pile 15 un fil 20 conduit à l'une des bornes d'une bobine de réactance 21, et de l'autre borne de cette bobine de réactance un fil 22 revient à la pile au sélénium 14, ce qui complète le circuit. Le but de ces bobines de réactance 18 et 21 est d'empêcher un courant alternatif de suivre cette voie et de le confiner au circuit récepteur, tout en permettant au courant continu de passer par la pile au sélénium 14. Un récepteur de téléphone ou autre dispositif reproducteur de sons approprié 16 est shunté à la pile au sélénium 14 d'une part, par un fil 23 et de l'autre borne de ce récepteur 16 un fil 24 conduit à une borne du condenseur 25, de l'autre borne de celui-ci un fil 26 ramène à la pile au sélénium 14. Le but de ce condensateur est d'empêcher le courant direct de passer au travers du récepteur de téléphone 16 tout en permettant au courant alternatif causé par l'action des fluctuations de lumière sur le sélénium de s'écouler à travers ce récepteur et de le faire vibrer de manière à émettre des sons articulés ou autres.

RÉSUMÉ.

L'invention vise :

1° Dans un cinématographe parlant, un film sensible, des moyens pour y enregistrer photographiquement une vue animée et des moyens pour y enregistrer photographiquement la voix ou d'autres sons.

2° L'enregistrement simultané par voie photographique sur un même film de vues animées et de sons articulés ou autres en vue de la reproduction synchronique de ces vues et sons.

3° La disposition des moyens pour obtenir cette reproduction synchronique.

4° La combinaison d'un appareil cinématographique avec un mécanisme enregistreur photographique de sons, le dit mécanisme consistant en un transmetteur connecté à un arc chantant placé par rapport au film sensible, dans une position telle que les variations d'intensité de lumière de l'arc chantant peuvent être enregistrées sur le film sensible simultanément avec l'enregistrement sur une

autre partie du film, de l'image produisant le son.

5° Un film sensible constitué par la combinaison d'enregistrements photographiques de vues animées et de sons.

James Henry MacCARTY.

Par procuration :

Ch. Post.

Fig. 1

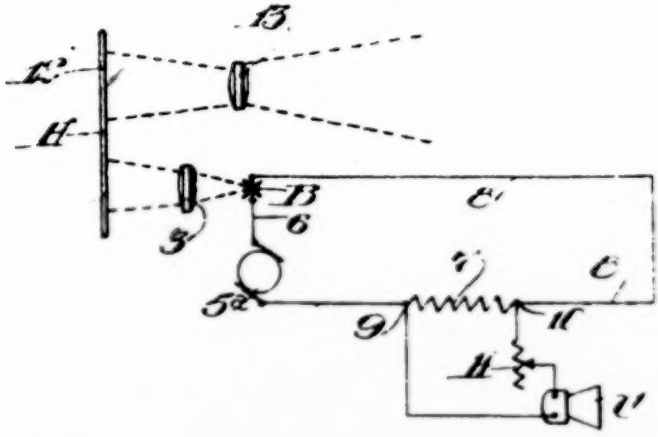

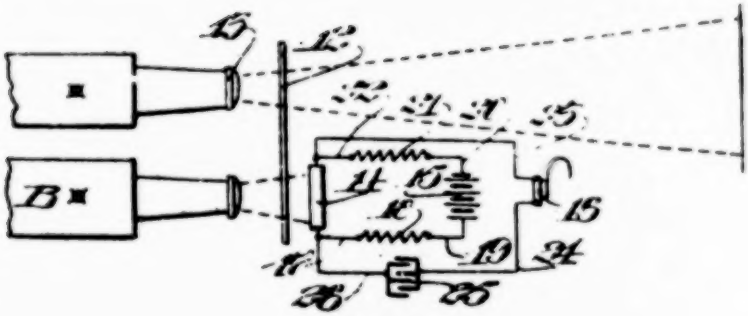

Fig. 2.

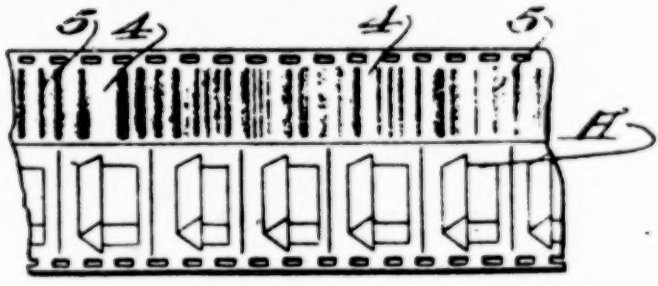

Fig. 5.

Defendant's Exhibit G. 2785

FRENCH PATENT—448,757

Applied for September 26, 1912.

Granted December 5, 1912—Published February 10, 1912.

I. H. MAC CARTY, resident of the United States.

The present invention pertains to animated talking pictures, and has as its object the obtaining of means for simultaneously recording and 2786
reproducing sounds and movements by the recording of both on a sensitive photographic film.

The invention is more completely described below with reference to the annexed diagram in which:

Fig. 1 is a diagrammatic sketch showing the recording mechanism.

Fig. 2 is a similar view showing the means employed for reproducing the sounds and movements recorded.

Fig. 3 is a detail view of the film.

This invention pertains to a cinematograph 2787
combined with a photographaphone and its object is the production of animated talking pictures.

The invention consists of means for producing a continuous photographic record of sounds spoken or otherwise, to one side of a sensitive film, simultaneously with the taking of animated pictures of those who produce the sounds, the latter being recorded at the other side of the film. This granted, the object of the invention is the production of a film on which the two recordings unroll parallel to each other or side by side in a continuous manner. The invention furthermore

2788 *Defendant's Exhibit G.*

comprises the production of means for the reproduction of the recorded sounds and views.

Fig. 1 shows the part of the apparatus employed for recording animated views and sounds. The sounds recorded on the sensitive film are produced by what is called in technical parlance the singing arc which is produced by vibrations received from a transmitter. This part of the apparatus functions as follows:

A represents the film which is placed in a dark
2789 chamber of usual construction as employed in photography. Two rollers are placed in the dark chamber and the photographic film is unrolled from one to the other at a constant speed. The rollers may be driven by any suitable means such as an electric motor or a crank, which drives them at such a speed that the film has a speed of travel of several meters per second. The film moves past a cylindrical lens 3 which concentrates upon it the light from arc B. The film is then taken from the apparatus and developed and fixed in the usual manner; the finished film shows
2790 variations of light accurate in proportion to their amplitude.

Fig. 3 shows a part of the film. The alternating light and dark bands 4 and 5 which seem to be extremely irregular are in reality extremely regular and harmonious; only their order changes with the corresponding changes of sounds of the voice. Each sound furnishes its particular group of lines and can easily and surely read on photophonographic film. The intensities of the singing arc B are produced by the transmitter C, as shown in the diagram of Fig. 1.

5^a indicates a generator of direct current which is connected by a wire 6 to one of the electrodes

of the arc B. The other pole of the generator is connected by a wire to one of the terminals of a choke coil 7; the other terminal of this coil is connected by wire 8 to the opposite terminal of the singing arc.

This completes the circuit between the singing arc and the generator, which produces a constant arc.

In order to vary the arc's light or to change its intensity in order to record sound waves, the transmitter C is shunted across the end terminals 9 and 10 of the choke coil, and equipped with a 2792
variable resistance 11 by means of which the amount of current passing through the transmitter may be adjusted. The light of arc B depends on the variations of the intensity of light which are proportional to the amount of current passed by the shunt circuit in which the transmitter is inserted. It is well known to men in the profession that when one speaks into a transmitter sound waves strike the latter's diaphragm with varying intensity. The vibrations of the diaphragm produce fluctuations in the strength of 2793
the passing current. These current fluctuations affect the current feeding the arc, which causes variations in the intensity of the rays of light; these light variations are recorded on the sensitive film as shown in Fig. 3, the intense light producing dark lines across the film. We thus see that the human voice or the sound waves which strike the diaphragm of the transmitter affect the intensity of the light of arc B, which in its turn is recorded on the sensitive film and produces what is known as a phonogram.

In producing a phonogram or film of this nature it is necessary to employ the type of photo-

2794 *Defendant's Exhibit G.*

graphic or cinematographic apparatus in which the film moves at a constant speed, whereas the side of the film 12 which takes the animated pictures of the actors or the side of the film representing the cinematographic part of the apparatus necessitates the employment of an eclipsing lens 13.

From the preceding it is seen that an animated talking picture is produced by combining the cinematographic pictures and the photophonographic records on the same film; the novelty in this
2795 system consists of recording the speech or the sounds and the animated views on the same film. By means of this the records of the voice and the animated views are always in synchronism, which is very necessary as experience has shown.

It often happens that in winding a film in a machine certain parts of it are damaged, which makes it necessary to cut it or to take out certain parts. A difficulty met hitherto in talking pictures in which phonographic records are used in combination with animated views, is the fact
2796 that if a portion of the film is cut out for any reason at all, there has been no practical procedure available for removing the corresponding phonographic sounds which accompany this particular portion of the moving picture. This has the following results:

For instance, if a section of the film shows a man rubbing his head and if the phonograph travelling in synchronism says, "Oh, my head," if this section showing the man rubbing his head is removed from the moving picture and if the picture is shown again, when the phonograph gets to these words the man may be rubbing his ankle. This produces ridiculous results and renders the film valueless.

Defendant's Exhibit G. 2797

This difficulty is entirely suppressed when the photographic recordings of sounds and moving pictures are combined on a single film. If any part of the film is damaged and cut out the corresponding sections of the phonographic and cinematographic records are necessarily removed together.

As the singing arc is not new no new arrangement of the light source is claimed, as it is well known that various arrangements have been made by means of which variations of light may 2798
be produced; these variations being affected by passing an electric current through a transmitter. In place of the singing arc shown here, the light of the sun or other light can be used, arranging it in such a manner that it falls on the diaphragm of the transmitter which may be a mirror, a silvered glass, a sheet of mica, such that the rays of light are reflected or projected upon the sensitive film; it is understood that the sound waves can be recorded on the film by different methods.

Fig. 2 is a diagrammatic view showing a method employed for reproducing the sounds and the 2799
moving pictures recorded on the sensitive film. In order to reproduce them the film is moved at the same speed and in the same direction as when it was taken behind the objective of the projecting apparatus, while the arc lamp B of constant intensity is then employed as source of light.

Facing the film there is mounted a selenium cell 14, connected in series with a dry battery 15, and with a receiver or other devise for reproducing sounds 16. When the film passes in front of the arc, the latter's rays projected through the film upon the selenium cell, vary ac-

2800 *Defendant's Exhibit G.*

cording to the lines of light and dark parts of the film, as shown in Fig. 3. Selenium is a substance whose resistance increases and decreases according to the variations of the light to which it is exposed; these variations of light produce corresponding variations in the intensity of the current passing through the selenium cell, and by means of the shunt circuit containing the receiver and the condenser, reproduce words or other articulated sounds. Simultaneously with the pro-
2801 duction or change of sound on the film the section of the film bearing the cinematographic image is projected on the screen and thus reproduced.

The electric circuit passing through the selenium cell and the receiver may follow the following path:

From one of the poles of the selenium cell 14, a wire 17 leads to a terminal of a choke coil 18 and from the other terminal of this coil a wire 19 leads to a terminal of battery 15. From the other pole of battery 15 a wire 20 leads to one
2802 of the terminals of a choke coil 21 and from the other terminal of this choke coil a wire 22 returns to the selenium cell completing the circuit. The purpose of the choke coils 18 and 21 is to prevent an alternating current from following this path and to confine it to the receiver circuit, while allowing the direct current to pass through the selenium cell 14. A telephone receiver or other suitable sound reproducing device 16 is shunted across the selenium cell 14 on one side by a wire 23 and from the other terminal of this receiver 16 a wire 24 leads to one terminal of a condenser 25, from the other terminal of which a wire 26 leads to the selenium cell 14. The pur-

pose of this condenser is to prevent the direct current from passing through the telephone receiver 16 while allowing the alternating current caused by the fluctuations of light on the selenium to flow through it and to make it vibrate in such a way as to emit articulate or other sounds. 2803

SUMMARY

The invention comprises:

1—In a talking cinematograph, a sensitive film, means for recording on it photographically a moving picture and means for recording on it photographically the voice or other sounds. 2804

2—The simultaneous recording by photographic means on the same film of moving pictures and of articulated or other sounds for the purpose of synchronized reproduction of these sounds and pictures.

3—The arrangement of means for obtaining this synchronous reproduction.

4—The combination of a cinematographic apparatus with a photographic recording mechanism for sounds, the said mechanism consisting of a transmitter connected to a singing arc placed with respect to the sensitive film in such a position that the variations of intensity of the light of the singing arc can be recorded on the sensitive film simultaneously with the recording on another part of the film of the image producing the sound. 2805

5—A sensitive film constituted by the combination of photographic recordings of moving pictures and of sounds.

DEFENDANT'S EXHIBIT H

RÉPUBLIQUE FRANÇAISE.

OFFICE NATIONAL DE LA PROPRIÉTÉ INDUSTRIELLE.

BREVET D'INVENTION.

XII. — **Instruments de précision, électricité.**
2. — Appareils de physique et de chimie, optique, acoustique.

N° 532.750

Film phonétique pour accompagnement d'images animées.

MM. Hans VOGT, Joseph MASSOLLE et Joseph ENGL résidant en Allemagne.

Demandé le 25 mars 1921, à 16 heures, à Paris.
Délivré le 21 novembre 1921. — Publié le 10 février 1922.
(Demande de brevet déposée en Allemagne le 2 avril 1919. — Déclaration des déposants.)

Dans la pratique de la cinématographie «muette», jusqu'à présent les commentaires nécessaires des images étaient donnés soit acoustiquement par des conférenciers, soit optiquement par la projection auxiliaire d'écritures, d'images intercalées ou de moyens analogues. La plupart du temps aussi, le défilé muet des images était agrémenté par le jeu d'un orchestre ou d'un orchestrion mécanique.

Les inconvénients de ces procédés d'explication et d'animation sont bien connus.

Par la cinématographie sonore, avec des procédés qui, simultanément à l'enregistrement cinématographique, permettent la fixation photographique des sons également et utilisent un moyen nouveau de reproduction électro-acoustique, les inconvénients, ci-dessus rappelés, sont supprimés. Mais en pratique on a constaté que l'enregistrement photographique simultané et synchrone des sons et des images n'est ni désirable ni faisable. D'une part, il ne serait pas avantageux de phonographier un acteur de première force en pantomime, mais affecté d'une voix médiocre. D'autre part, bien souvent, sur une scène de plein air, l'acoustique pourra être si mauvaise qu'il faut renoncer à l'enregistrement immédiat des sons produits en scène. D'ailleurs, dans les intermèdes comiques, présentant par exemple des animaux parlants, des attrapes, des scènes de confusions, etc., la fixation du son est complètement impossible.

La présente invention a pour objet un film d'accompagnement phonétique dont les photogrammes ne sont pas fondés sur les événements acoustiques concomitants de l'action photographiée, mais ont une source différente, choisie comme il faut et le plus favorablement possible. Ainsi, on pourra agrémenter des images, des cinématogrammes muets, des scènes de théâtre, etc., par une explication sonore quelconque ou par une musique appropriée.

La fabrication de ce film, qui n'a besoin que d'être relativement synchrone, pourra être opérée par le procédé suivant, donné à titre d'exemple.

Pendant l'enregistrement cinématographique de la scène originale plastique, on accouplera desmodromiquement, au mécanisme d'entraînement du film cinématographique, le tambour d'enroulement du film d'un acoustographe, distinct et séparé. Les sources phoniques servant à expliquer, agrémenter et animer l'action optique, telles que conférenciers, instruments de musique, machines à bruits de scènes et analogues, seront placées de manière acoustiquement favorable, en dehors du champ de l'objectif, et entre

ront en action, dès le début de la figuration, en accord convenable avec elle.

Quand, pendant l'enregistrement original cinématographique, pour une raison ou une autre, une tempête par exemple, l'enregistrement du film d'accompagnement est rendu impossible, on pourra y procéder à l'occasion d'une reproduction du film imagé fini, dans des conditions d'opérer analogues à celles ci-dessus exposées. Alors, le mécanisme d'entraînement de l'acoustographe serait accouplé à celui de l'appareil de projection.

Le traitement ultérieur des films imagés, après la pose, est, dans les deux cas, le même en ce qui concerne les procédés de copie, de reproduction, etc. Si le film d'accompagnement, pendant l'enregistrement, a défilé à la même vitesse que le film d'image, pour la reproduction scénique, les deux suites d'événements pourront pour des raisons de pratique, être copiées, si l'on veut, sur un même ruban de film.

En dehors des procédés qui viennent d'être détaillés, on pourra établir des phonogrammes commentateurs et animateurs, tels que des titres de film, des épîtres, des soli de musique et autres, par voie séparée, bien entendu, et les réunir sur des rubans acoustiques pour leur reproduction scénique, à la manière des films d'image.

Pour pouvoir repérer certains passages des films concordant en figuration et sonorité, il sera nécessaire, en outre, d'affecter les films correspondants de signes ou de chiffres de référence, à intervalles déterminés.

RÉSUMÉ.

Cette invention concerne un film photophonétique pour accompagnement des images ou des pantomimes, établi par éclairement transversal, présentant les particularités suivantes qui pourront être prises isolément ou en combinaison :

1° Son enregistrement indépendant des sonorités concomitantes de l'événement optique original;

2° Son impression, simultanée à l'enregistrement original cinématographique, par des sources sonores non (ou tout au plus partiellement) scéniques;

3° Son établissement au moyen de sources sonores appropriées, en vue du film d'image projeté;

4° Sa constitution, par une série convenablement accommodée de photophonogrammes, pris séparément;

5° La copie des deux séries de photogrammes des films d'image et d'accompagnement, sur un même ruban de film;

6° Le repérage en certaines places par des marques d'identité, des événements parallèles ou concordant sur les films d'images et d'accompagnement;

7° Le rapport d'entraînement des deux films assuré et ordonné par la perforation du film d'accompagnement aussi.

HANS VOGT, JOSEPH MASSOLLE
ET JOSEPH ENGL.
Par procuration :
ARMENGAUD jeune.

2812 *Defendant's Exhibit H.*

FRENCH REPUBLIC
FRENCH PATENT AND TRADEMARK OFFICE
LETTERS PATENT

XII.—Precision instruments, electricity.
No. 532,750.

2.—Apparatus of physics, chemistry, optics, acoustics.

Sound Film for Accompaniment of Motion
2813 Pictures.

MESSRS. HANS VOGT, JOSEPH MASSOLLE AND JOSEPH ENGL, residing in Germany.

Applied for on March 25, 1921, at 4:00 P. M. at Paris.

Issued on November 21, 1921.—Published on Feb. 10, 1922.

(Patent application filed in Germany on April
2814 2, 1919.—Declaration of the deponents.)

In the practical operation of "silent" motion pictures up to the present time, the comments, necessary to explain the pictures, were given either orally or by lect[illegible] optically by the auxiliary projection of t[illegible]s, of inserted images, or similar means. On most occasions, furthermore, the silent presentation of the pictures was made more pleasant by the playing of an orchestra or of a mechanical orchestrion.

The drawbacks of these processes of explanation and animation are well known.

In sound motion pictures, by means of processes which, simultaneously with the cinematograph-

ic recording, make possible also the photographic fixation of sounds and utilize a new means of electro-acoustic reproduction, the above mentioned difficulties are eliminated. However, in practical operation it has been found that the simultaneous and synchronous photographic recording of sounds and of images is neither desirable nor feasible. On the one hand, it would not be advantageous to make a phonograph record of a man who may be excellent in pantomime but who has only a mediocre voice. On the other hand, in connection with a scene taken in the open, very often the acoustics may be so bad that it may be necessary to dispense with the simultaneous recording of the sounds produced at such scene. Furthermore, in connection with comical strips, representing, for instance, talking animal, tricks, scenes of confusion, etc. the fixation of the sound is absolutely impossible.

The present invention refers to a film with phonetic accompaniment, the photograms of which are not based on the concomitant acoustic events of the photographed action, but have a different source, as properly and as favorably selected as possible. In this way one can improve images, silent motion pictures, theatrical scenes, etc. by any sound explanation or by suitable music.

This film, which only needs to be relatively synchronous, may be made in accordance with the following process, given by way of example.

During the motion picture recording of the original plastic scene one can couple in a positive manner to the motion picture film driving mechanism, the film winding drum of a separate and distinct acoustograph. The phonic sources serving to explain, make more interesting and enliven

2818 *Defendant's Exhibit II.*

the optic action, such as lecturers, musical instruments, sound machines for theatrical scenes, etc., are placed in an acoustically favorable manner, outside of the field of the objective lens, and will enter into action upon the starting of the show, in suitable agreement with same.

When during the original motion picture recording, for one reason or another, for instance, by a storm, the recording of the accompanying film is made impossible, one can proceed there-
2819 with at the time of the reproduction of the finished picture film, under operating conditions which are similar to those explained above. Then, the driving mechanism of the acoustograph will be coupled to that of the projection apparatus.

The subsequent treatment of the picture films, after the exposure, is, in both cases, the same as far as the printing process, reproduction process, etc. are concerned. If the accompanying film, during the recording, has run off at the same speed as the photographic picture film, for the scenic reproduction, the two different parts can,
2820 for practical reasons, be copied, if this is desired, on the very same film band.

Aside from the processes which have been described above, one can also make commenting and animating phonograms such as film titles, headings, musical solos, separately, of course, and join them on acoustic films for their scenic reproduction, in the same manner as the picture.

In order to be able to mark certain passages of the films that are in agreement as to picture and sound, it is necessary, furthermore, to make on the corresponding films reference signs or marks at definite intervals.

Defendant's Exhibit H. 2821

PATENT CLAIMS

This invention refers to a photo-phonetic film to accompany images or pantomime, produced by tranverse light markings, and showing the following characteristic features which can be taken advantage of either separately or in combination:

1. Its independent recording of concomitant sounds of the original optic event;

2822

2. Its impression, simultaneous with the original motion picture recording, by sound sources which are not scenic (or, at least, are only partially scenic);

3. Its establishment by means of suitable sound sources, in sight of the projected picture films;

4. Its formation by a suitably arranged series of photophonograms, taken separately;

5. The copying of two series of photograms of the picture and accompaniment films on the same film band; 2823

6. The marking at certain places by identification marks, of parallel or agreeing events on the picture and accompanying films;

7. The driving relation of the two films is assured and made positive also by the perforation of the accompaniment film.

HANS, VOGT, JOSEPH MASSOLLE & JOSEPH ENGL,
By ARMENGAUD, JR., Agent.

DEFENDANT'S EXHIBIT J

NUMBER (Series of 1913)

185332 ✓

1921

(EX'R'S BOOK) 43 – 115

DIV. 7

PATENT No. 1489314

Name Lee de Forest ✓

Assignor by mesne assigts. to De Forest Phonofilm Corporation, of Jersey City, N.J., a corp. of Delaware.

APR 8 1924

Of New York

County of

State of New York

Invention Recording Sound

PARTS OF APPLICATION FILED.

	ORIGINAL	RENEWED
Petition	July 16, 1921	, 192
Affidavit	" " , 1921	, 192
Specification	" " , 1921	, 192
Drawing	" " , 1921	, 192
Photo Copy	, 192	, 192
First Fee Cash $15	July 16, 1921	, 192
" " Cert.	, 192	, 192
Appl. filed complete	July 16, 1921	, 192
		, 192
Examined and Passed for Issue	March 4, 1924	, 192
Exr. Div. 7		Exr. Div.
Notice of Allowance March 6	1924	, 192
Final Fee Cash $20	mar 8, 1924	, 192
" " Cert.	, 192	, 192
Patented	APR 8-1924	, 192

filed

Division of Appl. No. 8

Attorney Darby & Darby, St Paul Building New York N.Y.

Associate Attorney

(No. of Claims Allowed 4) Print Claims 1 in O. G. (Cl. 88 12)

Title as Allowed Recording Sound

Div 23

1921
SPATENT O

PETITION

314

To the Commissioner of Patents:

The petition of LEE de FOREST, a

citizen of the United States, residing at New York

in the County of New York State of New York

and whose Post Office address is 1415 Sedgewick Ave., New York City

prays that Letters Patent may be granted to him for improvement in

RECORDING SOUND

as set forth in the annexed specification.

And he hereby appoints DARBY & DARBY, of St. Paul Building, 220 Broadway, New York City, N. Y., a firm composed of Samuel E. Darby, Walter A. Darby, Samuel E. Darby, Jr. and William C. Gerdsen his attorneys, with full power of substitution and revocation, to prosecute this application, to make alterations and amendments therein, to sign the drawings, to receive the Patent, and to transact all business in the Patent Office connected therewith.

Signed at New York in the County of New York and State of New York this 14th day of July 1921

Inventor's Full Name Lee de Forest

[redacted]

SPECIFICATION

TO ALL WHOM IT MAY CONCERN:

BE IT KNOWN that I, LEE de FOREST, a citizen of the United States, residing in the City of New York, County and State of New York, have made a certain new and useful invention in the art of RECORDING SOUND, of which the following is a specification.

This invention relates generically to the art of recording sound and more specifically where such record is obtained photographically for use in connection with photographic sound records such as films or the like, and is especially adaptable for use in connection with the art of motion picture photography.

The object of the invention is to provide means which are simple, economical and efficient for photographing sound record on films.

A further object of the invention is to provide means which are highly effective for accurately recording sounds on the marginal edges of a standard motion picture film.

Further objects of the invention will appear more fully hereinafter.

The invention consists substantially in the con-

Div 23

1421
SPATENT O

PETITION

314

To the Commissioner of Patents:

The petition of LEE de FOREST, a

citizen of the United States, residing at New York

in the County of New York State of New York

and whose Post Office address is 1415 Sedgewick Ave., New York City

prays that Letters Patent may be granted to him for improvement in

RECORDING SOUND

as set forth in the annexed specification.

And he hereby appoints DARBY & DARBY, of St. Paul Building, 220 Broadway, New York City, N. Y., a firm composed of Samuel E. Darby, Walter A. Darby, Samuel E. Darby, Jr. and William C. Gerdsen his attorneys, with full power of substitution and revocation, to prosecute this application, to make alterations and amendments therein, to sign the drawings, to receive the Patent, and to transact all business in the Patent Office connected therewith.

Signed at New York in the County of New York and State of New York this 14th day of July 1921

Inventor's Full Name { Lee de Forest

3

S P E C I F I C A T I O N

a

TO ALL WHOM IT MAY CONCERN:

BE IT KNOWN that I, LEE de FOREST, a citizen of the United States, residing in the City of New York, County and State of New York, have made a certain new and useful invention in the art of RECORDING SOUND, of which the following is a specification.

This invention relates generically to the art of recording sound and more specifically where such record is obtained photographically for use in connection with photographic sound records such as films or the like, and is especially adaptable for use in connection with the art of motion picture photography.

The object of the invention is to provide means which are simple, economical and efficient for photographing sound record on films.

A further object of the invention is to provide means which are highly effective for accurately recording sounds on the marginal edges of a standard motion picture film.

Further objects of the invention will appear more fully hereinafter.

The invention consists substantially in the con-

variation, combination, location and relative arrangement of parts and the method employed in connection therewith, all as will be more fully hereinafter set forth, as shown by the accompanying drawings and finally pointed out in the appended claims.

Fig. 1 is a diagrammatic view of a sound record embodying the principle of my invention.

Fig. 2 is a similar view showing the sound record applied to the marginal edge of the motion picture film in accordance with my invention.

Fig. 3 is a diagrammatic view illustrating the principle involved in recording the sound waves photographically, in accordance with my invention, on the marginal edge of a standard motion picture film.

The same part is designated by the same reference character wherever it occurs through the several views.

In my co-pending application, Serial No. 391,705, filed June 21, 1920, I show and describe methods for photographing sound-produced fluctuations of a source of light upon one or both margins of a standard motion picture film either outside or directly inside the intermittent feed perforations of the said film.

I find that if the original photographs of such sound-controlled light fluctuations be made large so that the width of the maximum amplitude of such photographic track be, say one-half inch or more, a more exact and faithful photograph containing any details of the finest light variations produced by sound waves will be obtained. For use as a sound record per se this type of record is satis-

factory, but as is readily apparent it would be too large a record to use in connection with a motion picture film unless used independently therefrom and therefore necessitating the various problems of synchronism which have always been considered, and still are considered to be the objectionable problems in this art. In accordance with my invention, however, I produce the [illegible] accurate and definite sound record on a film, for example, as shown in Fig. 1, and therewith reduce photographically the record thus obtained and print the same on one or both marginal edges of the motion picture film as shown in Fig. 2.

In the production of the photographic sound record of Fig. 1 it will be observed that the record is symmetrical on both sides of the axis thereof and it will readily be apparent that a highly effective and efficient record can be obtained by photographically the record contained on opposite sides of the axis thereof, on the marginal edge. This is accomplished, in accordance with my invention, in the manner [illegible] sound record film 2 containing [illegible] is passed between a [illegible] prisms [illegible] so arranged that the [illegible] the axis of the film 2 is reflected [illegible] the record on the other side of the film is reflected in the opposite direction by means of [illegible] It will, of course, be understood [illegible] affected by the sound record 3 that are reflected by the respective prisms 4 and 5. The [illegible] again reflected by prisms 6 and [illegible] in parallel lines through [illegible] in which the motion picture film [illegible] the picture spacing 11 thereof and [illegible] marginal edge

thereof orunexposed as to its entire surface, is located. Means are provided to reduce, in size, the sound record 3 contained on its film 2, to the necessary size to be accurately and completely recorded on the marginal edges 12 of the film 10. This means may comprise suitable lenses or preferably a combination of a convex lens with the prisms 6 and 7, as shown. By means of this arrangement it will readily be apparent to those skilled in the art that the large, clear, distinct sound record 3 contained on its film 2 may be accurately reproduced in smaller, but nevertheless complete detail on one or both marginal edges 12 of the motion picture film, to thereby enable utilization of the space of the film contained between the intermediate feed perforations 13, and the edge or edges thereof.

It will also be readily apparent to those skilled in the art that by suitable location of the prisms 4, 5, 6, 7, and the orifices 8 of the casing 9, the reproduction of the sound record may be effected on any other desired part of the film. By suitable variation in the form of the prisms 6 and 7, or the utilization of suitable lenses, the original sound record may be reduced in size, reproduced as of the same size or enlarged, as desired.

Many other modifications and changes in details will occur to those skilled in the art without departing from the spirit and scope of my invention as defined in the claims, but having now set forth the objects and nature of my invention, and having shown and described structures embodying the principles thereof and illustrating the method employed in accordance therewith, what I claim as new and useful, and of my own invention, and desire to secure by Letters Patent, is:-

1. The method of producing sound and picture records which comprises photographing simultaneously upon separate sensitized surfaces the picture and the sound, and re-photographing the sound record thus obtained on the picture record.

Cancelled per A

2. The method of producing sound and picture records which comprises photographing simultaneously upon separate sensitized surfaces the picture and the sound, reducing the sound record thus obtained in one dimension, and re-photographing the same on the desired portion of the picture record.

3. The method of producing sound and picture records which comprises photographing simultaneously upon separate sensitized surfaces the picture and the sound, reducing the sound record thus obtained in one dimention, and simultaneously re-photographing the same on the desired portion of the picture record.

---

1. The method of producing talking moving pictures on the same film which comprises photographing simultaneously upon separate films the picture and the sound, and photographing the sound record on an unexposed portion of the picture film.

2. The method of producing talking moving pictures on the same film which comprises photographing simultaneously upon separate films the picture and the sound, reducing the size of the record, and photographing the reduced sound record upon an unexposed portion of the picture film.

3. The method of producing talking moving pictures on the same film which comprises photographing simulta-

eously upon separate films the picture and the sound, and photographing the sound record on an unexposed portion of the picture film between the marginal edge and the sprocket perforations thereof.

4. The method of producing talking moving pictures on the same film which comprises photographing simultaneously upon separate films the picture and the sound, reducing the size of the record, and photographing the reduced sound record upon an unexposed portion of the picture film between the marginal edge and the feed sprocket perforations thereof.

5. The method of combining photographic sound and picture records which comprises photographing a reduction of the sound record on an unexposed portion of the picture record.

cancelled per B

9. The method of producing sound and picture records which comprises photographing simultaneously upon separate sensitized surfaces the picture and the sound, dividing the sound record through the axis thereof, and reproducing the divisional portions thereof on the picture record.

Cancelled per B

10. The method of producing talking moving pictures on the same film which comprises photographing simultaneously upon separate films the picture and the sound, dividing the sound record through the axis thereof, and rephotographing the divisional portions thereof on the picture record.

11. The method of producing talking moving pictures on the same film which comprises photographing simultaneously upon separate films the picture and the sound, dividing the sound record through the axis thereof, and rephotographing the divisional portions thereof on the picture record.

In testimony whereof I have hereunto set my hand on this 14th day of July, A. D., 1921.

Lee de Forest.

OATH

County of Bronx
State of New York } ss.

LEE de FOREST

the above named petitioner being duly sworn, (affirmed), deposes and says that he is a citizen of the United States and resident of New York in the County of New York and State of New York that he verily believe himself to be the original, first and sole inventor of the improvement in RECORDING SOUND

described and claimed in the foregoing specification; that he does not know and does not believe that the same was ever known or used before his invention or discovery thereof, or patented or described in any printed publication in any country before his invention or discovery thereof, or more than two years prior to this application, or in public use or on sale in the United States for more than two years prior to this application; that said invention has not been patented in any country foreign to the United States on an application filed by him or his legal representatives or assigns more than twelve months prior to this application; and that no application for patent on said improvement has been filed by him or his representatives or assigns in any country foreign to the United States.

Inventor's Full Name } Lee de Forest

Sworn to and subscribed before me this 14th day of July 1921 A. D., 1921.

Margaret M. Norton
Notary Public

#11

7 Room 312 V Paper No. 2

Address only The Commissioner of Patents, Washington, D. C. and not any official by name

All communications respecting this application should give the serial number, date of filing, title of invention, and name of the applicant.

DEPARTMENT OF THE INTERIOR

UNITED STATES PATENT OFFICE

WASHINGTON Dec. 7, 1921

U. S. PATENT OFFICE DEC 7 - 1921 MAILED

Darby & Darby
St. Paul Bldg.
New York, N. Y.

Please find below a communication from the EXAMINER in charge of the application of

Lee de Forest, filed July 16, 1921, Recording Sound,
Serial No. 485,332

Thomas E. Robertson
Commissioner of Patents

Claim 1 is rejected on

Craig 1,260,337 Mar. 26, 1918 88-16.2

Claims 2, 3, 5 and 7 are rejected as old combinations in view of Craig. The invention, if any, is in the method of recording the sound and has nothing to do with the method of synchronizing the sound and picture records. The method of recording the sound should be claimed per se.

Claims 4 and 6 are rejected on Craig in view of French patent to

Canton 459,537 ~~May~~ Sept 5 1913 (1 sheet) 88-16.2

It would not be invention to put the sound record in the place shown in Fig. 5 of Canton.

Claim 8 is rejected as not involving invention over Craig. It is immaterial whether the original or a reduction is used.

Claim 9 appears allowable, subject to the requirement for division infra.

Claims 10 and 11 are rejected as not reading on the disclosure. The portion is not reproduced.

Claims 1, 4 and 6 are for rephotographing the original on the sound record.

Claims 2, 3, 5, 7 and 8 are for rephotographing a reproduction.

Claims 9, 10 and 11 are for a method which involves rephotographing a part of the original record.

Division is required between claims 1, 4 and 6, claims 2, 3, 5, 7, and 8 and claims 9, 10 and 11. See ex parte Eagle, 1871 C. D. 137.

W.J.W.

Examiner.

MAIL ROOM
OCT
25
1922
U.S. PATENT OFFICE

Motion 23

IN THE UNITED STATES PATENT OFFICE.

Hon. Commissioner of Patents,
Washington, D.C.

7

S i r :-

In the matter of the application of LEE DE FOREST, filed July 16, 1921, for RECORDING SOUND, Serial No. 485,382, and in response to the Examiner's letter dated December 7, 1921, please amend as follows:-

Cancel claims 1 to 3

Renumber claims 4 to 8 as claims 1 to 5.

Cancel claims 9, 10 and 11.

REMARKS.

Favorable reconsideration is respectfully requested on the claims retained in this case. Obviously these claims overcome the Craig patent, for it is a physical impossibility for the Craig arrangement to permit the accomplishment of applicant's invention as defined in the claims. Furthermore, the rephotographing step in the process is a step which is not present in the art cited.

Favorable reconsideration is likewise respectfully requested on the question of division between the claims now retained in the case. It is believed that these claims are properly in the case. Claims 9, 10 and 11, however, have been withdrawn from the case, ~~xxxxxx~~ pursuant to the Examiner's requirement, and will form the subject-matter of a separate application. The early allowance of the applica-

tion as now presented is respectfully requested.

Very respectfully,

Dann & Dann

Attorneys for applicant.

Dated: New York, N.Y.,

October 23, 1922.

Mr. 7 Room 512

Address only "The Commissioner of Patents, Washington, D. C." and not any official by name.

260

Paper No. 4

All communications respecting this application should give the serial number, date of filing, title of invention, and name of the applicant.

DEPARTMENT OF THE INTERIOR

UNITED STATES PATENT OFFICE

WASHINGTON March 24, 1923.

Darby & Darby,

St. Paul Building

New York, New York

U. S. PATENT OFFICE
MAR 24 1923
MAILED

Please find below a communication from the EXAMINER in charge of the application of

Lee de Forest, filed July 16, 1921, Recording Sound, Serial No. 485,332

Thomas E. Robertson
Commissioner of Patents.

Reconsidered as amended Oct.25, 1922.

Claims 1 to 4 appear allowable.

Claim 5 is rejected on Craig. The unexposed portion of the picture record is not necessarily the original record but might be an unexposed portion of a print.

This claim is further rejected on Figure 5 of the French patent to Canton Barter 459,937, Sept. 8, 1913 (88-16.2) 1 sh.

There is no invention in reducing the size of the record.

WJW

Examiner

U. S. Patent Office
MAR 3 1924
DIVISION VII

IN THE UNITED STATES PATENT OFFICE

7

Hon. Commissioner of Patents,
Washington, D. C.

S i r:

In the matter of the application of LEE DeFOREST, for Recording Sound, filed July 16, 1921, Serial No.485,338, and in response to the Office letter dated March 24, 1923, please amend as follows:

Cancel claim 5.

R E M A R K S

An early allowance of the application as now presented is respectfully requested.

Respectfully,

Daly & Daly
Attorneys for applicant

Dated:
New York, N.Y.,
February 27, 1924.

INTERFERENCE.

Interference No. ~~53103~~ *Paper No.* 6.

Name, Dee deForest

Serial No. 485,332. Patent No. 1,489,514.

Title, Recording Sound.

Filed, July 16, 1921. Patented April 8, 1924.

Interference with Vogt et al.

DECISIONS OF

Law Examiner, _____ *Dated,* _____

Ex'r of Interferences, Adverse *Dated,* July 14/28

Board, _____ *Dated,* _____

Commissioner, _____ *Dated,* _____

REMARKS:

This should be placed in each application or patent involved in interference in addition to the interference letter by Primary Examiner

Forwarded from 7 Div. to Examiner of Interferences
November 2, 1925

-213-

Paper No. 7
(INTERFERENCE)

DEPARTMENT OF [redacted] COMMERCE
UNITED STATES PATENT OFFICE
WASHINGTON, D. C.

(Copy mailed patentee and assignee).

PATENT OFFICE
NOV 10 1925
MAILED

Darby & Darby
St. Paul Bldg.
New York City.

Please find below a copy of a communication from the Examiner concerning the patent granted April 8, 1924, #1,489,314, to Lee DeForest, on Serial No. 485,332, filed July 16, 1921; for RECORDING SOUND.

Very respectfully.

Room No. 106.

ADDRESS ONLY
THE COMMISSIONER OF PATENTS
WASHINGTON D. C.

Thomas E. Robertson.
Commissioner of Patents.

53103

The case, above referred to, is adjudged to interfere with others, hereafter specified, and the question of priority will be determined in conformity with the Rules.

The statement demanded by rule 110 must be sealed up and filed on or before JAN4 1926 *, with the subject of the invention, and name of party filing it, indorsed on the envelope. The subject-matter involved in the interference is*

1. The method of producing talking moving pictures on the same film which comprises photographing simultaneously upon separate films the picture and the sound, and photographing the sound record on an unexposed portion of the picture film .

2. The method of producing talking moving pictures on the same film which comprises photographing simultaneously upon separate films the picture and the sound, and photographing the sound record on an unexposed portion of the picture film between the marginal edge and the sprocket perforations thereof.

This interference involves your patent, above identified, and

An application for Process for Producing Combined Sound and Picture Films, filed by Hans Vogt, Joseph Massolle and Josef Engl, of 49 Babelsbergerstrasse, Berlin-Wilmersdorf, Germany, 60 Cunostrasse, Berlin-Grunewald, Germany, and 63 Hohenzollerndamm, Berlin-Grunewald,

J 18

Germany, whose attorneys are Ward, Crosby & Smith, of 233 Broadway, New York City, and whose assignee is Tri-Ergon Limited, Zurich, Switzerland.

The relation of the counts of the interference to the claims of the respective parties is as follows:

Counts	Vogt et al.	DeForest
1	3	1
2	4	3

Counts Compared.

Examiner, Division

J19

DEFENDANT'S EXHIBIT L

DEUTSCHES REICH

AUSGEGEBEN
AM 2. FEBRUAR 1923

REICHSPATENTAMT

PATENTSCHRIFT

№ 368383 —
KLASSE 57a GRUPPE 37
(V 16431 VI/57a²)

LIBRARY
APR 14 1923
U. S. PATENT OFFICE

**Hans Vogt in Berlin-Wilmersdorf,
Joseph Massolle und Dr. Joseph Engl in Berlin-Grunewald.**

Verfahren zum Herstellen von Filmen mit Bildreihen und photographierter Tonschrift.

Patentiert im Deutschen Reiche vom 15. April 1921 ab.

Beim Herstellen sprechender Filme, bei denen auch die Töne auf photographischem Wege aufgezeichnet werden, ist es insbesondere aus Betriebsgründen von großem Vorteil, die Tonschrift und die Bildreihe auf einen gemeinsamen materiellen Träger (Film) aufzubringen. Es ergeben sich aber infolge der bei der kinematographischen Aufnahme schwankenden Lichtverhältnisse häufig Unterschiede im Belichtungsgrad der Bromsilberschicht, und zwar in der Weise, d. h. die Bildreihe über- bzw. unterbelichtet wird. Da der gleiche Film aber auch nahe an der Bildreihe die immer normal belichtete Tonzeichenreihe trägt, lassen sich bei kombinierten Negativen diese Unterschiede durch Entwicklung, Abschwächen, Verstärken usw. nicht ausgleichen. Sie lassen sich nur dadurch beheben, daß die unter- bzw. überbelichteten Negativstellen eine getrennte, entsprechend abgepaßte Behandlung erhalten. Technisch ist dies so gut wie unmöglich, solange sich die beiden Reihen auf dem gleichen Film befinden.

Erfindungsgemäß wird diese Schwierigkeit dadurch beseitigt, daß das Entwickeln der Negative getrennt erfolgt. Das Aufnehmen kann hierbei entweder auf zwei Filmen geschehen oder auf einem, der aber vor dem Entwickeln geteilt wird. Der Synchronismus wird in beiden Fällen durch die Perforation und durch entsprechende Marken gewährleistet.

Die Herstellung der Positivfilme kann erfolgen, indem man die beiden Negativfilme, vorteilhaft nacheinander, auf den gleichen Positivfilm kopiert. Man kann aber auch die beiden Negativfilme vorher der Länge nach miteinander verkleben und dieses so gewonnene kombinierte Negativ wie üblich kopieren.

Patent-Ansprüche:

1. Verfahren zum Herstellen von Positivfilmen, welche Bildreihen und photographisch aufgenommene Tonschrift enthalten, dadurch gekennzeichnet, daß die Negative getrennt entwickelt werden.

2. Verfahren gemäß Anspruch 1, dadurch gekennzeichnet, daß die Aufnahme der Tonzeichen und der Reihenbilder auf einen gemeinsamen Film erfolgt, der nachher getrennt wird.

3. Verfahren gemäß Anspruch 1, dadurch gekennzeichnet, daß die Negative nach erfolgter Behandlung der Länge nach miteinander vereinigt werden.

2881

Defendant's Exhibit L.

GERMAN PATENT
No. 368,383

Published Feb. 2, 1923

Hans Vogt in Berlin—Wilmersdorf
Joseph Massolle and Dr. Joseph Engl in Berlin

Method of producing films with image and photographed sound

2882

Patent in Germany since April 15, 1921

In producing talking films when also sound is to be recorded by photographic process, it is for practical reasons of big advantage to record sound and image on one single material carrier (Film).

But on account of changing lighting conditions, when pictures are taken, there will be often differences in exposure of the silver-bromide coat 2883
and that in a way, that the image will be over— or under—exposed. As the same film carries also the always normally exposed sound track, it is impossible to remedy this difference through development, reducing, increasing, etc. It can only be remedied so that the under—resp. over—exposed parts of the negative receive a separate especially fitted treatment. Technically is this almost impossible, as long as images and sound are on the same film.

According to invention this difficulty will be removed by developing the negative separately.

2884 *Defendant's Exhibit L.*

The taking can be done either on two films or on one, which will be divided before developing. The synchronism will in both cases be guaranteed by the perforation and by corresponding marks.

The printing of the positive films can be done by printing both negative films favorable one after the other on the same positive film. It can also be done by pasting both negative films lengthwise together and then making a print from this combined negative in the usual way.

2885 Patent Claims:

1. Method of producing positive films, which carry image and photographed sound, in that way characterized, that the negatives are separately developed.

2. Method according to claim 1 in that way characterized that the taking of sound and image is done on one film, which is afterwards divided.

3. Method according to claim 1 in that way characterized that the negatives after finished
2886 treatment are lengthwise combined.

DEFENDANT'S EXHIBIT M

B e s c h e i n i g u n g.

Die angehefteten Stücke sind eine richtige und genaue Wiedergabe der Unterlagen des Patents 368 383. Das Patent ist auf die " Tri-Ergon Akt.-Ges. " in Zürich (Schweiz) umgeschrieben worden.

Berlin, den 26.Oktober 1932.

Der Präsident des Reichspatentamts.

I.V.

L. Harling

Patent 368 383

C.R. F o r t h,
Oberingenieur.

P.A. 204110. 14.4.21.

Tempelhof, den 13.April 1921.
Albrechtstr. 104.

Patentanmeldung.

An das

Reichspatentamt,

Berlin SW. 61.

Der Unterzeichnete meldet hierdurch eine Erfindung der Herren

Ingenieur Hans Vogt, Wilmersdorf, Babelsbergerstr. 49,
Physiker Dr. Joseph Engl., Grunewald, Orberstr. 17 und
Ingenieur Joseph Massolle, Grunewald, Cunostr. 60

an, betreffend

"Verfahren zur Herstellung
kombinierter Tonbildfilme"

und beantragt die Erteilung eines Patentes.

Die Anmeldegebühr im Betrage von M.80.— wird gleichzeitig hiermit bei der Kasse des Reichspatentamtes eingezahlt.

Dem Antrage liegen bei:

1 Beschreibung nebst Patentansprüchen,

1 Abschrift der Beschreibung und Patentansprüche,

1 Empfangsbestätigung (frankierte Postkarte),

1 von den Anmeldern auf mich ausgestellte Vertretervollmacht.

Es wird beantragt, nach Beschlussfassung die Bekanntmachung der Anmeldung auf vorläufig 3 Monate auszusetzen.

gez. Unterschrift.

1 Anlagen.

m/2

C. [illegible],
Oberingenieur.

~~P.A. 204110. 14.4.21.~~

Tempelhof, den 13.April 1921.
Albrechtstr. 104.

Patentanmeldung. P.A. 327706. 15.6.21.

"Verfahren zur Herstellung kombinierter Tonbildfilme".

Bei ~~der~~ Herstellen sprechender Filme ist es insbesondere aus Betriebsgründen von grossem Vorteil, die Tonschrift ~~reihe~~ und die Bildreihe auf einen gemeinsamen materiellen Träger (Film) aufzubringen. ~~Bei diesem Verfahren~~ Es ergeben sich aber infolge der bei der kinematographischen Aufnahme schwankenden Lichtverhältnisse häufig Unterschiede im Belichtungsgrad der Bromsilberschicht und zwar in der Weise, dass die Bildreihe über- bezw. unterbelichtet wird. Da der gleiche Film aber auch nahe an der Bildreihe die immer normal belichtete Tonzeichenreihe trägt, lassen sich bei kombinierten Negativen diese Unterschiede durch Entwicklung, Abschwächen, Verstärken etc. nicht ausgleichen. Sie lassen sich nur dadurch beheben, dass die unter- bezw. überbelichteten Negativstellen eine getrennte, entsprechend abgepasste Behandlung erhalten.

Technisch ist dies so gut wie unmöglich, solange sich die beiden ~~Ereignis~~Reihen auf dem gleichen Film befinden.

Erfindungsgemäss wird diese Schwierigkeit dadurch beseitigt, dass ~~zur Herstellung der Negative entweder ganz lich getrennte Filme vorgesehen sind oder solche, die bei der Aufnahme wohl noch zusammenhängen,~~ Das Entwickeln der Negative getrennt erfolgt. Das Aufnehmen kann hierbei entweder auf zwei Filmen geschehen oder auf einem, der aber vor dem Entwickeln ~~lung~~ geteilt wird ~~aber auseinander getrennt werden~~. Der Synchronismus wird in beiden Fällen durch die Porforation und durch entsprechende Marken gewährleistet.

Die Her-

Die Herstellung der Positivfilme kann erfolgen, indem man die beiden Negativfilme, vorteilhaft nacheinander, auf den gleichen Positivfilm kopiert. Man kann aber auch die beiden Negativfilme vorher der Länge nach miteinander verkleben und dieses so gewonnene kombinierte Negativ wie üblich kopieren.

Patentansprüche.

1.) Verfahren zum Herstellen von Tonbildfilmen, ~~unter Verwendung kombinierter Ton- und Bildfilme, wobei die Ton-Bild-Positive auf einen gemeinsamen Film kopiert sind~~, dadurch gekennzeichnet, dass die Negative getrennt entwickelt werden.

2.) Verfahren zur Herstellung von kombinierten Tonbildfilmen gemäss Anspruch 1, dadurch gekennzeichnet, dass die Aufnahme der Tonzeichen und der Reihenbilder auf getrennten Filmen erfolgt.

2.) Verfahren ~~zur Herstellung von kombinierten Tonbildfilmen~~ gemäss Anspruch 1, dadurch gekennzeichnet, dass die Aufnahme der Tonzeichen und der Reihenbilder auf einen gemeinsamen Film erfolgt, der nachher getrennt wird.

3.) Verfahren ~~zur Herstellung von kombinierten Tonbildfilmen~~ gemäss Anspruch 1, ~~2~~, dadurch gekennzeichnet, dass die Negative nach erfolgter Behandlung der Länge nach miteinander vereinigt werden.

Reichspatentamt.

V. 16431. VI/57a^2.

Berlin SW. 61, den 27.Mai 1921

Herrn

Oberingenieur C.R. P o r t h,

Berlin-Tempelhof.

Albrechtstr. 104.

Nachstehend wird das Ergebnis der Prüfung mit der Aufforderung mitgeteilt, sich binnen 3 Monate äußern zu wollen.

Es ist an sich bekannt, die Tonschrift und die Bilder getrennt aufzunehmen und beide Reihen ~~dann~~ auch später- hin zu vereinigen, (vgl.Patentschr.279598,Kl.42g). Anspruch 2 erscheint daher nicht gewährbar. Die Bekanntmachung ist in Aussicht genommen, falls die Anmelder sich mit den zurückzureichenden Unterlagen einverstanden erklären.

Reichspatentamt.

Prüfungsstelle für Kl. 57a

gez.Unterschrift.

C.R. F o r t h,

Oberingenieur.

P.A. 327706. 15.6.21.

Bln.-Tempelhof, den 14.Juni 1921.
Albrechtstr. 104.

V.16431 VI/57 a^2

An das

Reichspatentamt

Berlin SW. 61

In Erledigung der Verfügung vom 27.5.1921 erkläre ich mich mit den amtlicherseits in den Unterlagen vorgenommenen Änderungen einverstanden und reiche in der Anlage die Urschrift zurück.

1 Urschrift.

gez. Unterschrift.

Reichspatentamt. Zu P.A. Nr. 327706. A.A. VI.

Berlin, den 27. 5. 1921.

V. 16431 VI/57 a^2.

B e s c h l u s s.

Die am 14. April 1921 eingegangene Patentanmeldung der Herren Ingenieur Hans Vogt in Berlin-Wilmersdorf, Babelsbergerstr. 49, Ingenieur Joseph Massolle in Berlin-Grunewald, Cunostr. 60 u. Physiker Dr. Joseph Engl, Berlin Grunewald, Hohenzollerndamm 53 ist bekanntzumachen.

Die Bekanntmachung erfolgt in der Klasse 57a, Gruppe 37 mit der Bezeichnung:

"Verfahren zum Herstellen von Filmen mit Bildreihen u. photographierter Tonschrift"

und zwar nach Ablauf der beantragten, mit dem Tage der Zustellung dieses Beschlusses beginnenden Aussetzungsfrist von 3 Monaten.

Zur Auslegung gelangen:

Beschreibung und 3 Patentansprüche, zuletzt eingegangen am 15.~~11~~.6.21, (P.A. 327706).

Reichspatentamt.

Prüfungsstelle für Klasse 57a^2.

Reichspatentamt. Zu P.A. Nr. 449500. A.A. VI.

Berlin, den 21.November 1922.

V. 16 431 VI/57 a 2

~~End~~Beschluss.

Auf die Anmeldung der Herren Hans Vogt, Berlin-Wilmersdorf, Babelsbergerstr. 42, Joseph Massolle, Bln.-Grunewald, Cunostr. 60 u.Dr. Joseph Engl, Bln.-Grunewald, Hohenzollerndamm 53, wird ein vom 15. 4.1921 an laufendes Patent unter der Bezeichnung:

"Verfahren zum Herstellen von Filmen mit Bildreihen & photographierter Tonschrift",

auf Grund der ausgelegten Unterlagen erteilt

Das Patent führt die Nummer 368383.

Reichspatentamt.

Prüfungsstelle für Klasse 57a2.

gez. Unterschrift.

AMERICAN CONSULAR SERVICE

German Reich,)
Province of Brandenburg,)
Consulate General of the) ss.
United States of America)
at Berlin.)

I, John F.Stone Vice Consul of the United States of America at Berlin, German Reich, duly commissioned and qualified, do hereby certify that Dr. Bertin

whose true signature and official seal are, respectively, subscribed and affixed to the foregoing instrument, was at the time of subscribing same an official of the Government... Patent office of the - - -

Certificate

The papers attached hereto are a correct and exact transcript of the basic documents of Patent 368,383. The patent has been assigned to the "Tri-Ergon Akt.-Ges." of Zurich (Switzerland).

Berlin, October 26, 1932

The President of the National Patent Office.

By Authority

(Signed) Dr. Harting.

Patent 368,383.

Patent Office 204110. April 14, 1922

C. R. F o r t h ,
Chief Engineer.

Tempelhof, April 13, 1921.
Albrechstrasse 104.

Patent Application.

To the

Patent Office,

Berlin. S.W.61.

The Undersigned herewith files an invention of Engineer Hans Vogt, Wilmersdorf, Babelsbergerstr. 49, Physicist Dr. Joseph Engl, Grunewald, Orberstr. 17, and Engineer Joseph Massolle, Grunewald, Cunostr. 60 relating to

"Method for the Manufacture of Combined Sound Picture Films"

and requests the grant of a patent.

The application fee of Rm. 80.- is being paid at the same time to the cashier of the Patent Office.

With this invention there are filed:

1 Description and Patent Claims,
1 Copy of the description and patent claims,
1 Receipt (self-addressed postcard),
1 Power of Attorney from the applicant to myself.

It is requested that after a decision to lay out the application, publication thereof be suspended for three months.

signed; Signature.

4 Enclosures.

C. R. F o r t h ,

Chief Engineer.

~~P. A. 204110. April 14, 1921.~~

Tempelhof, April 13, 1921.
Albrechstrasse 104.

Patent Application.

Patent Office. 327706
June 15, 1921.

Method for the Manufacture of a combined Picture Sound Film.

T in which the sounds are photographically recorded

In the manufacture of a sound film T it is particularly of great advantage for reasons of operation that the sound ~~sequence~~ record and the picture sequence be fixed upon a common carrier (film). ~~In this method~~ As a result of the various light conditions in the cinematographic recording there are effected numerous differences in the intensity of illumination of the silver bromide coating, in such a manner that the picture sequences are either over or under exposed. In that the same film however carries the normally illuminated sound sequences near the picture sequences in combined negatives this difference cannot be compensated for by development, weakening, amplification etc. They can only then be removed in that the over or under exposed negative parts of the film receive a separate appropriate treatment. ——————— Technically this is as much as impossible so long as the two sequences are upon the same film.

According to this invention this difficulty is eliminated in that ~~for the manufacture of the negatives either wholly separate films are provided or such, which in recording are still connected to each other but which, prior to the development, are severed from each other.~~ the negatives are separately developed. Recording may be on either two films or upon a single film which is severed before development. The synchronism is maintained in both cases by the perforations and by corresponding marks.

The manufacture of the positive film can result in that the two negative films are preferably copied one after the other upon the same negative films. However, both the negative films can be reunited longitudinally by pasting them to each other and the combined negative can thus be copied as usual.

Claims:

1.) Method for the manufacture of ~~combined sound picture films in which the sound picture positive is copied on a common film,~~ positive films containing picture sequences and photographically recorded sound records characterized in this that the negatives are separately developed.

~~2.) Method for the manufacture of combined sound~~ picture films according to Claim 1, ~~characterized~~ in this that the recording of a sound sequence and the picture ~~sequence is accomplished upon separate film.~~

~~3.)~~ Method ~~for the manufacture of combined sound picture films~~ according to Claim 1, characterized in this that the recording of the sound record and the picture sequences take place upon one film which is afterwards severed.

~~4.)~~ Method ~~for the manufacture of combined sound picture films~~ according to Claims 1 and 3, characterized in this that the negatives are longitudinally united with each other after treatment.

Patent Office

L. 16431. VI/57a.2.

Berlin SW 61, May 27, 1921.

Chief Engineer C. R. F o r t h,

Berlin-Tempelhof

Albrechtstrasse 104.

Herewith the result of the examination is communicated to you with the request that you take a position thereon within three months.

It is known per se to record the sound and picture sequences separately and later on to combine both (Compare Patent Specification 279 598, Class 42 g). Claim 2 therefore does not appear allowable. Publication is contemplated in the event that the applicant declares his acceptance of the documents which are to be returned.

Patent Office

Examiner for Class 57a.

signed: Signature.

C. R. F o r t n ,

Chief Engineer.

Patent Office 327706. June 15, 1921.

Berlin-Tempelhof, June 14, 14, 1921.
Albrechstrasse 104.

V. 1642/1 VI/57a[2]

The Patent Office,

B e r l i n SW 61.

In reply to the action of May 27, 1921 I declare my acceptance of the changes which the Office has made in the documents filed and am herewith returning these documents.

Signed: Signature.

1 Enclosure.

PATENT OFFICE.

Responsive to Patent Office Document
Application Department VI.

Berlin, July 27, 1921.

V. 16431 VI/57a^2.

Decision.

The application filed on April 14, 1921 by Engineer Hans Vogt of Berlin-Wilmersdorf, Babelsbergerstr. 49, Engineer Joseph Massolle of Berlin, Grunewald, Cunostr. 60 and Physicist Dr. Joseph Engl, Berlin-Grunewald, Hohenzollerndamm 53 ist to be published.

The publication is to be made in Class 57a, Group 37 with the title:

"Method for the Manufacture of Films with Picture Sequences and Photographic Sound Record".

after the expiration of the requested extension of three months starting with the day of service of this decision.

There will be published:

Decision and three claims, which were last filed on June 6, 1921. (Patent Office Document 327 706).

Government Patent Office
Examiner for Class 57 a^2.

Government Patent Office. Responsive to Patent Office 449500. Application Division VI.

Berlin, November 21, 1922.

V. 16431 VI/57a[2]

Final Decision.

On the basis of published documents there will be granted on the application of Hans Vogt, Berlin-Wilmersdorf, Babelsbergerstr. 42, Joseph Massolle, Berlin-Grunewald, Cunostrasse 60 and Dr. Joseph Engl, Berlin-Grunewald, Hohenzollerndamm 53 a patent as of April 15, 1921, with the title:

"Method for the Manufacture of Films with Picture Sequences and Photographic Sound Record".

The patent will have Number 368 385.

Patent Office.

Examiner for Class 57a[2].

signed: Signature.

PJW/KB.

Defendant's Exhibit N. 2941

GREAT BRITAIN AND IRELAND.
LONDON, ENGLAND.
CONSULATE-GENERAL OF THE
UNITED STATES OF AMERICA. } ss.:

I JOHN H. FUQUA, Vice-Consul of the United States of America, at London, England, do hereby make known and certify to all whom it may concern, that the signature "A. J. MARTIN" subscribed to the annexed Certificate, is of the true and proper handwriting of A. J. Martin, Assistant Comptroller of the Patent Office, London, 2942
England, that the seal affixed to the said Certificate is the seal of the Patent Office, London, England; and that to all acts signed as the annexed full faith and credit are and ought to be given in Judicature and thereout.

In testimony whereof I have hereunto set my hand and affixed the Seal of the Consulate-General of the United States of America, at London, England, aforesaid, this 28th day of October, 1932. 2943

(Signed) J. H. FUQUA,
J. H. FUQUA,
Vice-Consul of the United States
of America,
at London, England.

(Seal)

Service No. 10449.

Fee $2.00—12/8d.
GN.
($2.00 Fee Stamp)

2944 *Defendant's Exhibit N.*

Form P. Cert. 1a.

PATENTS AND DESIGNS ACTS, 1907 TO 1928.

I, the undersigned, being an officer authorized by the Board of Trade under Section 62 (3) of the Patents and Designs Acts, 1907 to 1928, hereby certify that in connection with the application for Patent of Hans Vogt and others, No. 178,442, the annexed documents marked "1" to "4" are true copies respectively of the application
2945 form, the complete specification as placed open to public inspection on the 15th April, 1932, under the provisions of Section 91 of the Patents and Designs Acts, 1907 and 1919, the specification with translation of German Patent No. V.16431 VI/57 a 2, filed in support of the claim to priority of date under the provisions of the said Section, and of the complete specification as accepted and placed open to public inspection on the 16th November, 1922.

I also certify that the complete specification, in its accepted form, was first printed and placed
2946 on sale in the Sale Branch of this Office on the 7th December, 1922.

I further certify that a Patent was sealed in respect of the said application on the 1st February, 1923, and dated the 14th April, 1921, under the provisions of the said Section; that under date the 17th January, 1925, Tri-Ergon A.—G., of 6, Pelikantrasse, Zurich, Switzerland, a Swiss Company, was registered as proprietor of the said Patent by virtue of a Deed of Assignment dated the 16th August, 1924; and that the annexed document marked "5" is a true copy of an attested copy of the said Deed of Assignment.

Defendant's Exhibit N. 2947

This certificate is issued for use in the United States of America.

Witness my hand this
27th day of October 1932.

A. J. MARTIN.

The Patent Office,
25, Southhampton Buildings,
London, W.C.2,
England.

(Seal)

2948

178442

Patents Form No. 1b.
Stamp £1.

10394
11 Apr 1922

PATENTS AND DESIGNS ACTS, 1907 and 1919.

APPLICATION FOR PATENT UNDER INTERNATIONAL AND COLONIAL ARRANGEMENTS

2949 We, HANS VOGT, Engineer, of 49 Babelsberger Strasse, Berlin-Wilmersdorf; JOSEPH MASSOLLE, Engineer, of 60, Cuno Strasse, Berlin-Grunewald; and JOSEF ENGL, Doctor of Physics, 53 Hohenzollern-damm, Berlin-Grunewald; all in Germany, of German Nationality, do hereby declare that we have made application for protection of our invention of Process for producing combined sound-picture films, in the following Foreign State and on the following official date, viz.: Germany, 14th April, 1921.

That the said invention was not in use within the United Kingdom of Great Britain and Ire-

2950 *Defendant's Exhibit N.*

land and the Isle of Man by any other person or persons before the 14th April, 1921, to the best of our knowledge, information, and belief; and we humbly pray that a patent may be granted to us for the said invention in priority to other applicants, and that such patent shall have the date 14th April, 1921.

HANS VOGT.
JOSEPH MASSOLLE.
DR. JOSEF ENGL.

2951

We hereby appoint Messrs. Sefton-Jones, O'dell & Stephens, of 285, High Holborn, London, W.C.1, to act as our Agents in respect of the within application for a Patent, and request that all notices, requisitions, and communications relating thereto may be sent to such Agents at the above address.

Dated the 22nd day of February, 1922.

HANS VOGT.
JOSEPH MASSOLLE.
2952 DR. JOSEF ENGL.

10394
11 Apr 1922

This specification is a copy of the original specification at the date on which the application became open to public inspection.

PATENTS AND DESIGNS ACTS, 1907 & 1919.
PATENTS FORM NO. 3.
COMPLETE SPECIFICATION.

"Process for producing combined sound—picture films."

We, HANS VOGT, Engineer, of 49, Babelsberger Strasse, Berlin-Wilmersdorf; JOSEPH MASSOLLE,

Defendant's Exhibit N.

Engineer, of 60, Cuno Strasse,Berlin-Grunewald; and Josef Engl, Doctor of Physics, of 53, Hohenzollern-damm, Berlin-Grunewald; all in Germany, of German Nationality, do hereby declare the nature of this invention and in what manner the same is to be performed, to be particularly described and ascertained in and by the following statement:—

In the production of speaking films it is of great advantage especially from the point of view of use, to arrange the sound sequence and the picture sequence upon one and the same material carrier (film).

In this procedure, however, there frequently occur in consequence of the changing lighting conditions in the cinematographing process, changes in the degree of lighting of and the bromide of silver layer, and this causes the picture sequence to be either overlighted or underlighted.

As the same film, however, bears close to the picture sequence the continuously normally lighted sound sequence, those differences cannot be removed in the case of combined negatives by developing, weakening, strengthening and so forth. They can only be removed by subjecting the underlighted or the overlighted negative places to separate corresponding treatment.

Technically, this treatment is practically impossible so long as the two sequences are photographed upon the same film.

According to the present invention the difficulty is overcome by either employing entirely separate films for the production of the negatives or films which are connected during the photo-

2956 *Defendant's Exhibit N.*

graphing, but which are separated from one another before the developing.

The synchronism is assured in both cases by the perforations and by corresponding marks. The production of the positive films can take place by copying the two negative films preferably consecutively upon the same positive film.

One can however, also unite previously the two negative films longitudinally together, and then copy this so united negative in the usual manner.

2957

Having now particularly described and ascertained the nature of our said invention and in what manner the same is to be performed, we declare that what we claim is:—

1. Process for the production of a combined sound and picture films, in which the sound sequence and picture sequence positive are copied upon a single film, characterized by the feature that the respective negatives have been developed separately.

2958

2. Process for the production of combined sound and picture films according to claim 1, characterized by the feature that the photographing of the sound sequence and of the picture sequence takes place on separate films.

3. Process for the production of combined sound and picture films as set forth in claim 1 characterized by the feature that the photographing of the sound sequence and of the picture sequence takes place upon a single film which is subsequently divided.

4. Process for the production of combined sound and picture films as set forth in claims 1

Defendant's Exhibit N. 2959

to 3, characterized by the feature that the negatives after development are re-united.

Dated this 11th day of April, 1922.

SEFTON-JONES O'DELL & STEPHENS,
Chartered Patent Agents,
285, High Holborn,
London, W.C.1,
Agents for the Applicants.

[INTERNATIONAL CONVENTION] 2960

178442

BESCHEINIGUNG

10394

11 Apr 1922

Die Herren Hans Vogt in Berlin-Wilmersdorf, Joseph Massolle in Berlin-Grunewald, and Dr. Joseph Engl in Berlin-Grunewald haben im Deutschen Reiche ein Gesuch um ein Erfindungspatent für ein

"Verfahren zur Herstellung kombinierter Tonbildfilme" 2961

am 14. April 1921 beim Reichspatentamt hinterlegt.

Das angeheftete Stück stimmt mit der ursprünglichen Unterlage dieser Patentanmeldung überein.

Berlin, den 3. Mär 1922.

REICHSPATENTAMT.

(Seal of the Patent Office)

2962 *Defendant's Exhibit N.*

Verfahren zur Herstellung kombinierter Tonbildfilme.

V. 16431 VI/57 a.2.

Bei der Herstellung sprechender Filme ist es insbesondere aus Betriebsgründen von grossem Vorteil, die Tonreihe und die Bildreihe auf einen gemeinsamen materiallen Träger (Film) aufzubringen. Bei diesem Verfahren ergeben sich aber infolge der by der kinematographischen
2963 Aufnahme schwankenden Lichtverhältnisse häufig Unterschiede im Belichtungsgrad der Bromsilberschicht und zwar in der Weise, dass die Bildreihe über- bezw. unterbelichtet wird. Da der gleiche Film aber auch nahe an der Bildreihe die immer normal belichtete Tonzeichenreihe trägt, lassen sich bei kombinierten Negativen dise Unterschiede durch E n t w i e k l u n g, Abschwächen, Verstärken etc. nicht ausgleichen. Sie lassen sich nur dadurch beheben, dass die unter- bezw. überbelichteten Negativstellen eine getrennte, entsprechend abgepasste Behandlung
2964 erhalten.

Technisch ist dies so gut wie unmöglich, solange sich die beiden Ereignisreihen auf dem gleichen Film befinden.

Erfindungsmäse wird diese Schwierigkeit dadurch beseitigt, dass zur Herstellung der Negative entweder gänzlich getrennte Filme vorgesehen sind oder solche, die bei der Aufnahme wohl noch zusammenhängen, vor der Entwicklung aber auseinander getrennt werden. Der Synchronismus wird in beiden Fällen durch die Perforation und durch entsprechende Marken gewährleistet.

Defendant's Exhibit N.

Die Herstellung der Positivfilme kann erfolgen, indem man die beiden Negativfilme, vorteilhaft nacheinander, auf den gleichen Positivfilm kopiert. Man kann aber auch die beiden Negativfilme vorher der Länge nach fiteinander verkleben und dieses so gewonnene kombinierte Negativ wie üblich kopieren.

Patentansprüche.

1.) Verfahren zur Herstellung kombinierter Tonbildfilme. wobei die Ton- Bild- Positive auf einen gemeinsamen Film kopiert sind, dadurch gekennzeichnet, dass die Negative getrennt entwickelt werden.

2.) Verfahren zur Herstellung von kombinierten Tonbildfilmen, gemäss Anspruch 1, dadurch gekennzeichnet, dass die Aufnahme der Tonzeichen und der Reihenbilder auf getrennten Filmen erfolgt.

3.) Verfahren zur Herstellung von kombinierten Tonbildfilmen, gemäss Anspruch 1, dadurch gekennzeichnet, dass die Aufnahme der Tonzeichen und der Reihenbilder auf einem gemeinsamen Film erfolgt, der nachher getrennt wird.

4.) Verfahren zur Herstellung von kombinierten Tonbildfilmen gemäss Anspruch 1-3, dadurch gekennzeichnet, dass die Negative nach erfolgter Behandlung der Länge nach miteinander vereinigt werden.

2968 *Defendant's Exhibit N.*

PATENTS AND DESIGNS ACTS, 1907 & 1919.

STATUTORY DECLARATION.

IN THE MATTER of an Application for Letters Patent in the United Kingdom under the International Convention by HANS VOGT, JOSEPH MASSOLLE and DR. JOSEPH ENGL.

10394
11 Apr 1922

2969 I, HERBERT SEFTON-JONES, of the firm of Sefton-Jones, O'Dell and Stephens, 285, High Holborn, London, W.C.1, Patent Agent, solemnly and sincerely declare as follows:

That the following is an exact translation made by me of the Certificate of the German Patent Office and the certified copy of the German Patent Specification attached thereto filed at the German Patent Office with the Application of HANS VOGT, JOSEPH MASSOLLE and DR. JOSEPH ENGL, on the 14th April, 1921, which Certificate
2970 and certified copy are filed herewith.

CERTIFICATE.

Messrs. Hans Vogt of Berlin-Wilmersdorf, Joseph Massolle of Berlin-Grunewald, and Dr. Joseph Engl of Berlin-Grunewald, have filed in Germany an Application for a Patent of Invention for a

"Process for the production of combined tone and picture films"

on the 14th April, 1921, at the Patent Office.

Defendant's Exhibit N. 2971

The attached document corresponds with the original documents of this Patent Application.

BERLIN, the 3rd March, 1922.

THE PATENT OFFICE.
(Seal)

V. 16431 VI/57 a 2.

2972

"Process for the production of combined tone and picture films."

V. 16431 VI/57 a. 2.

In the production of speaking films it is of great advantage, especially for operative reasons, to combine the series of tone marks and the series of pictures upon a common material carrier (film).

In this procedure, however, there occur frequent differences in the degree of lighting of the Bromide of silver layer in consequence of the varying lighting conditions during the cinematographic exposure, and this, moreover, in the manner that the picture series is either over-lighted or under-lighted. As the like film, however, also bears close to the series of pictures the continuously normal lighted roll of tone marks, these differences cannot be equalized in combined negatives by developing, weakening, or strengthening, &c. They can there only be remedied by giving to the under-or over-lighted

2973

2974 *Defendant's Exhibit N.*

parts of the negative a separate correspondingly adapted treatment.

Technically this is almost impossible as long as the two series of impressions are placed on the same film.

According to the present invention, this difficulty is obviated by the procedure that for the production of the negative either entirely separate films are provided, or films which are connected together for the photographing but which
2975 are separated from one another before the developing. The synchronism is guaranteed in both cases by the perforation and by corresponding marks.

The production of the positive film can take place by copying the two negative films, preferably one after the other, on the same positive film. One can, however, also stick together the two negative films previously lengthways and copy in the usual maner the combined negatives thus produced.

2976

PATENT CLAIMS.

1. Process for the production of combined sound and picture films whereby the sound and picture positives are copied upon a common film, characterized by the feature that the negatives are developed separately.

2. Process for the production of combined sound and picture films according to Claim 1, characterized by the feature that the taking of the sound marks and the series of pictures takes place on separate films.

Defendant's Exhibit N.

3. Process for the production of combined sound and picture films according to Claim 1, characterized by the feature that the taking of the sound marks and the picture series takes place upon a common film which is afterwards divided.

4. Process for the production of combined sound and picture films according to Claims 1 to 3, characterized by the feature that the negatives after treatment are united together longitudinally.

And I make this solemn declaration conscientiously believing the same to be true and by virtue of the Provisions of the Statutory Declarations Act, 1835.

HERBERT-SEFTON JONES.

Declared at 26 Lincoln's Inn Fields in the County of London,

this 11th day of
April, 1922.

Before me

R. FORD SMITH,
A Commissioner for Oaths.

2980

Defendant's Exhibit N.

[Second Edition.]
(SEAL)

PATENT SPECIFICATION

Convention Date (Germany): Apr. 14, 1921.
Application Date (in United Kingdom): Apr. 11, 1922.
Complete Accepted: Nov. 16, 1922.
No. 10,394/22. 178,442

COMPLETE SPECIFICATION

Process for Producing Combined Sound-picture Films.

We, HANS VOGT, Engineer, of 49, Babelsberger Strasse, Berlin-Wilmersdorf, JOSEPH MASSOLLE, Engineer, of 60, Cuno Strasse, Berlin-Grunewald, and JOSEF ENGL, Doctor of Physics, of 53, Hohenzollern-damm, Berlin-Grunewald, all in Germany, of German nationality, do hereby declare the nature of this invention and in what manner the same is to be performed, to be particularly described and ascertained in and by the following statement:—

2981

In the production of speaking films, it is of great practical advantage to take the sound record and the picture record on one and the same film.

In this operation, however, changes in the degree of lighting of the layer of bromide of silver frequently occur owing to changing lighting conditions in the cinematographic process, and this causes over-exposure or under-exposure of the picture sequence.

If the continuously normally lighted sound record is borne adjacent to the picture record on the same film, the effect of the variations of exposure cannot be removed by developing, by weakening or strengthening the solution, and so forth. They can only be removed by subjecting the under-exposed or over-exposed negative places to separate appropriate treatment, but this is practically impossible as long as the two sequences are treated alike, being photographed on the same film.

2982

The process for the producion of combined sound-picture films hereinafter set forth differs from previous attempts in this direction, chiefly in the perfect synchronization of the sound and picture-sequences, whilst permitting of the separate development of the respective negatives necessitated by unavoidable variations in the lighting of the films during the initial exposure.

Attempts have been made to attain the end in view by taking the two negatives separately and independently and subsequently combining the records for reproduction; but it is found impossible to secure full synchronization in this manner.

It has also been proposed to pass two separate films for the picture and sound records respectively, the films being driven positively and simultaneously by passing over the same sprocket wheel through a talking apparatus and to provide means for producing a series of corresponding identification marks upon the films by aid of which the two films after separate development can be reassembled; but this process also lacks the requisite accuracy of register.

According to the present invention, the difficulty is overcome by employing films for the production of the negatives which are integral during the photographing, but which are separated from one another before developing.

After development, these two negative films are re-united and are copied upon the same positive film. In this way, the absolute coincidence of the sound and the picture record respectively is assured, whilst the needful difference in treatment can be given during the development.

Having now particularly described and ascertained the nature of our said invention and in what manner the same is to be performed, we declare that what we claim is:—

Improved process for the production of combined sound and picture records, in which the sound record and the picture record are produced simultaneously on a single film which is then divided and the two parts developed separately, and afterwards re-united and used to print the single positive record.

Dated this 11th day of April, 1922.

SEFTON-JONES, O'DELL & STEPHENS

Abingdon: Printed for His Majesty's Stationery Office, by Burgess & Son.

[*Price 1/—*] [Wt. 56A.—125/1/1929.]

Defendant's Exhibit N. 2983

I hereby certify that this is a true and exact copy of the original Indenture dated the 16th day of August 1924.

Dated the 22nd day of September 1924.

ARTHUR STEPHENS

(Stamp—One Shilling)

Stamp Six Pence.

Stamp Six Pence. 2984

THIS INDENTURE made the 16th day of August One thousand nine hundred and twenty-four BETWEEN JOSEF ENGL, of 53, Hohensellerndamm, Berlin-Grunewald, Germany, doctor of physics, HANS VOGT, of 49, Babelsbergerstrasse, Berlin-Wilmersdorf, Germany, Engineer and JOSEPH MASSOLLE, of 60, Cunostrasse, Berlin-Grunewald, Germany, Engineer, all citizens of the German Republic, hereinafter called the assignors, (which expression shall include executors, adminstrators and assigns, where the context so requires or admits), of the one part, and the firm TRI-ERGON A.-G. of Pelikanstrasse 6, Zurich, Switzerland, hereinafter called the assignees (which expression shall include executors, successors and assigns, where the context so requires or admits), of the other part. 2985

WHEREAS by letters patents

Nos. 177,530 dated 24th March 1921
177,514 dated 24th March 1921
178,133 dated 9th April 1921
178,442 dated 14th April 1921
189,982 dated 23rd November 1921

2986 *Defendant's Exhibit N.*

His Majesty King George V did give and grant subject to the provisos therein mentioned unto the said assignors His special license, full power, sole privilege and authority, that the assignors by their agents or licensees and no other may at all times thereafter during the term of sixteen years from the date of said Letters Patents, make, use, exercise and vend within the United Kingdom, of Great Britain and Ireland, and Isle of Man, in such manner as to them may seem
2987 meet, their inventions.

Now this Indenture Witnesseth that in consideration of Five Pounds Sterling (£5) now paid by the assignees to the assignors, the receipt of which is hereby acknowledged, the assignors do hereby assign and convey unto the assignees the said inventions hereinbefore mentioned and the hereinbefore recited Letters Patents, and the full and exclusive benefits and advantages thereof respectively and of any extension and benefits and advantages whatsoever to
2988 the same inventions. Letters Patents and premises belonging to hold the same unto the assignees during all the residues now unexpired of the said term by the said Letters Patents granted and during any extension of the said terms.

In pursuance of Section 73 of the Finance Act, 1910, it is hereby certified that the transaction above effected does not form part of a larger transaction or of a series of transactions in respect of which the amount or value or the aggregate amount or value of the consideration exceeds £500.

Defendant's Exhibit N. 2989

IN WITNESS WHEREOF the said parties to these presents have hereunto set their hands and seals the day and year first above written.

SIGNED SEALED AND DELIVERED BY THE SAID HANS VOGT OF the first part in the presence of: — HANS VOGT

DR. HANS GRONTHER

FRITZ SCHMIDTHEIN

2990

SIGNED SEALED AND DELIVERED by the said JOSEF ENGL of the first part in the presence of: — JOSEF ENGL

DR. HANS GRONTHER

FRITZ SCHMIDTHEIN

SIGNED SEALED AND DELIVERED by the said JOSEPH MASSOLLE of the first part in the presence of: — JOSEPH MASSOLLE

2991

DR. HANS GRONTHER

FRITZ SCHMIDTHEIN

SIGNED SEALED AND DELIVERED by the said firm of TRI-ERGON A.-G. of the second part in the presence of: — TRI-ERGON A.-G

J. HEUSSER-STAUB H. HEBERLEIN

DR. R. SUTER

J. STAHLI-REBMANN

2992 *Defendant's Exhibit N.*

Die ruckseitigen Unterschriften

1) des Ingenieurs Hans Vogt in Berlin Wilmersdorf Babelsbergerstr 49,

Stamp
1/-

2) des physikers Dr. Josef Engel in Berlin Grunewald Hohenzollerndamm 53

2993 3) des Ingenieurs Joseph Massolle in Berlin-Grunewald Cunostr. 60

beglaubige ich

No. 221 Not. Reg Jahr 1924
Berlin, den 16 August 1924
Sabersky
Notar

Stamp
1/-

Kostenbergehnung
Der Wert des Gegenstandes beträgt 500 G. m.

2994

1. Geuühren nach 5 der Gebuhrenordnung und 32.41 des Gerichtskostengesetzen vom 25.7.1910/29.4.20	2 gm.
2. Pauschsatz (20 d. Geb.—Ord f. Not)	3 gm.
3. Stempel	
4.	
Zusammen	5 gm.

Der Notar

SABERSKY

Stamp
1/-

Defendant's Exhibit N. 2995

Legalisation

Vue pour l'egalisation de la signature ci-dessus de la maison Tri-Ergon S. A. Tiefenhofe 7, Zurich 1, apposee par M. M. Jakob Heusser-Staub, Fabrikant, Zollikerstr. 225 a Zurich 8,

Zurich 8, le 30 Aout 1924
Geb. Frk. 2 Notariat Riesbach—Contr. No. 699 Zurich.

J. B. ACHMANN
Notar 2996

Legalisation

Vu pour l'egalisation de la signatur de M.M. Dr. R. Suter, Advokat, Gessnerstr. No. 24 a St. Gallen u. Jak. Stahli-Rebmann, Kfm., Feldegg-str. 58, Zurich 8.

Zurich 8, le 30 Aout 1924
Geb. Frk. 4
Contr. No. 702/3

2997
Notariat Riesbach-Zurich

J. B. ACHMANN
Notar

Stamp
1/-

WESTERN ELECTRIC RECORDING SYSTEM

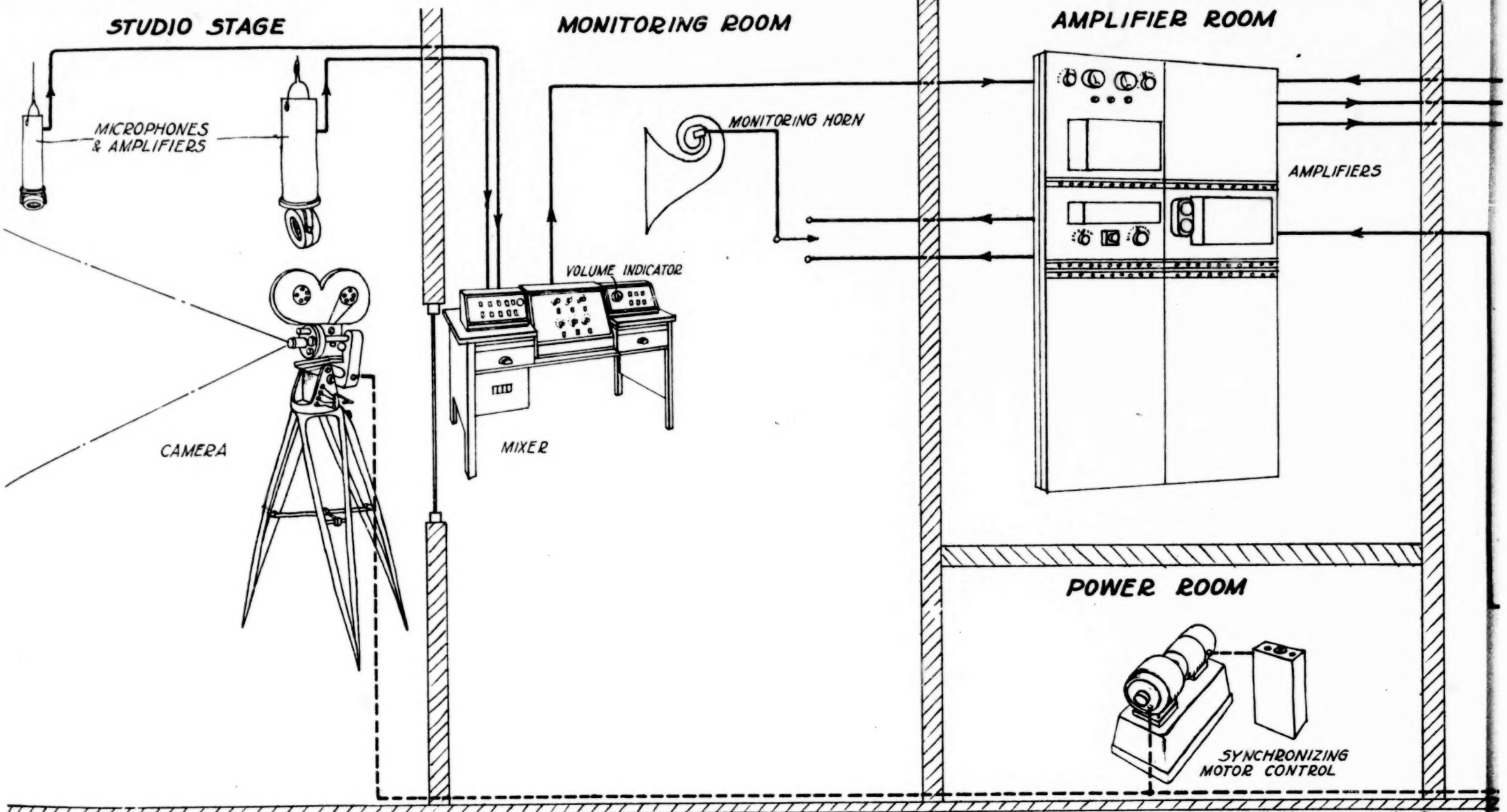

DEFENDANT'S EXHIBIT O

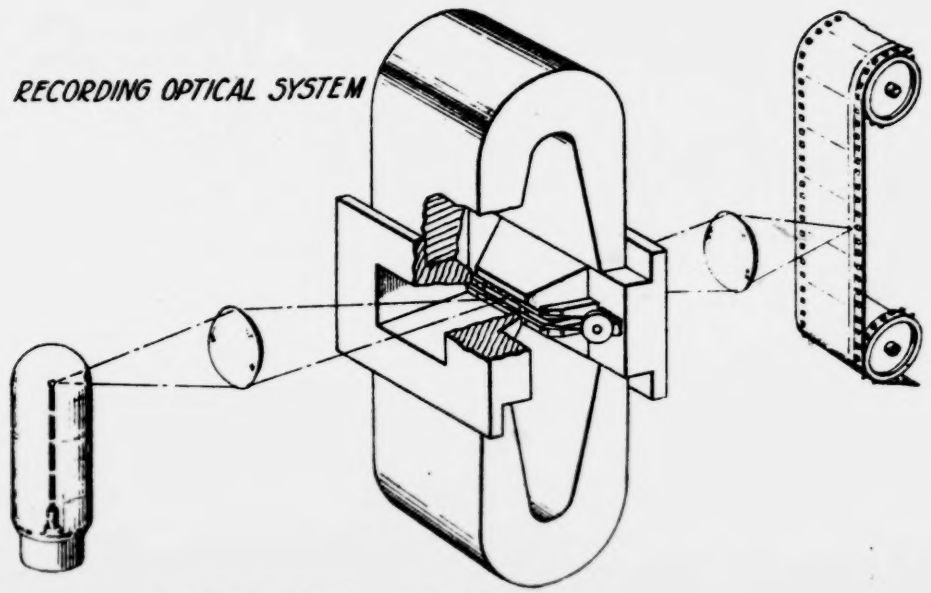

WESTERN ELECTRIC RECORDING SYSTEM

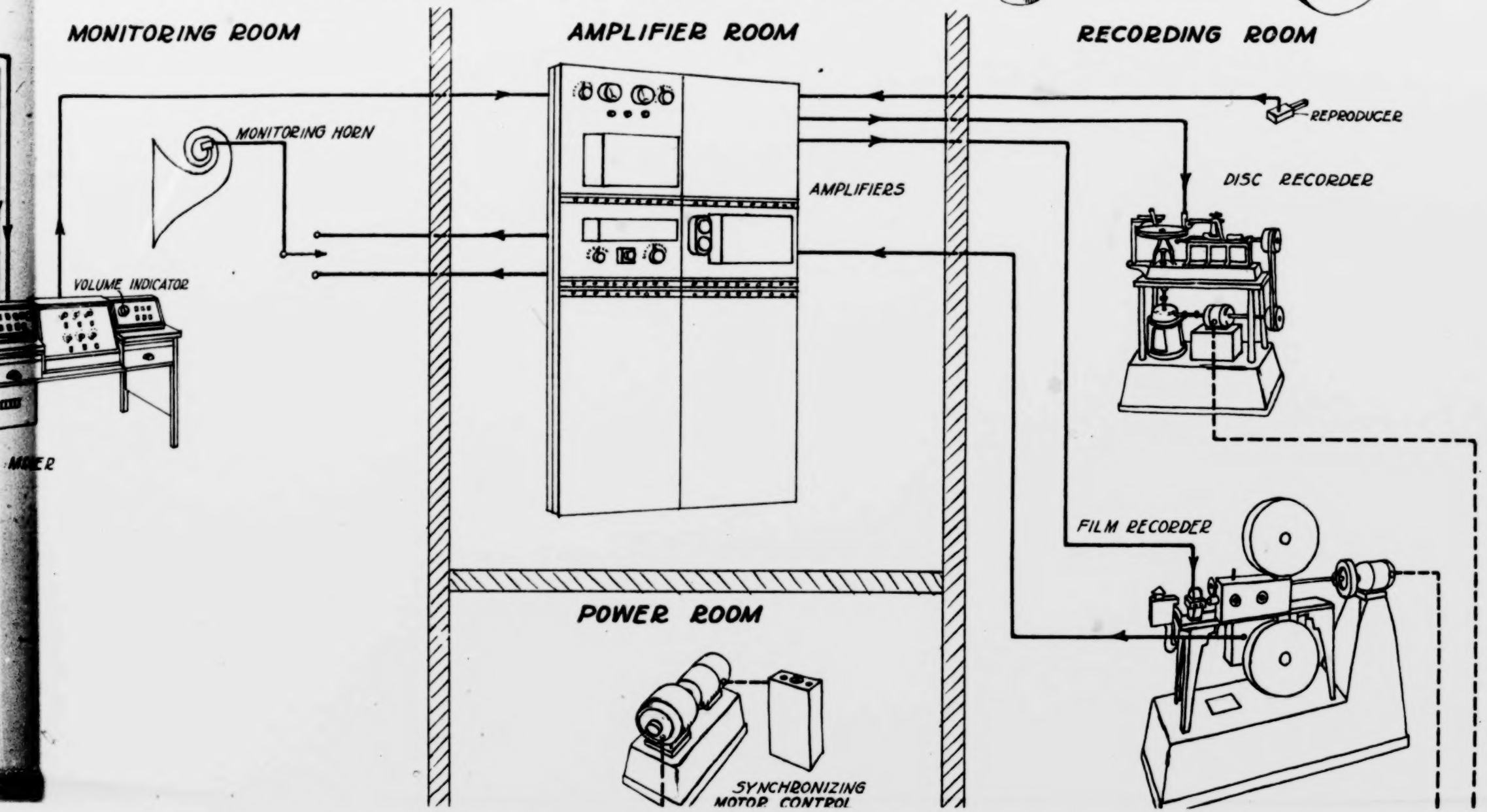

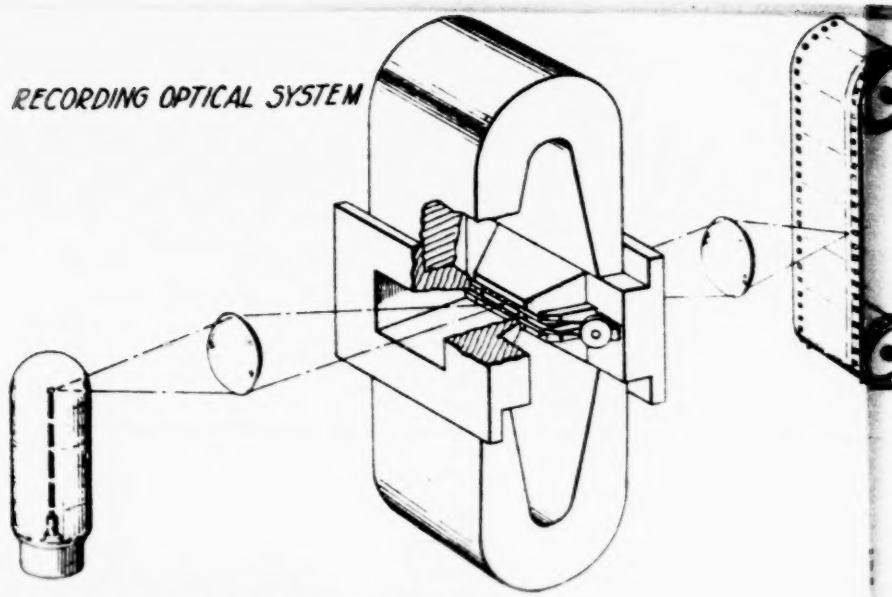

WESTERN ELECTRIC RECORDING SYSTEM

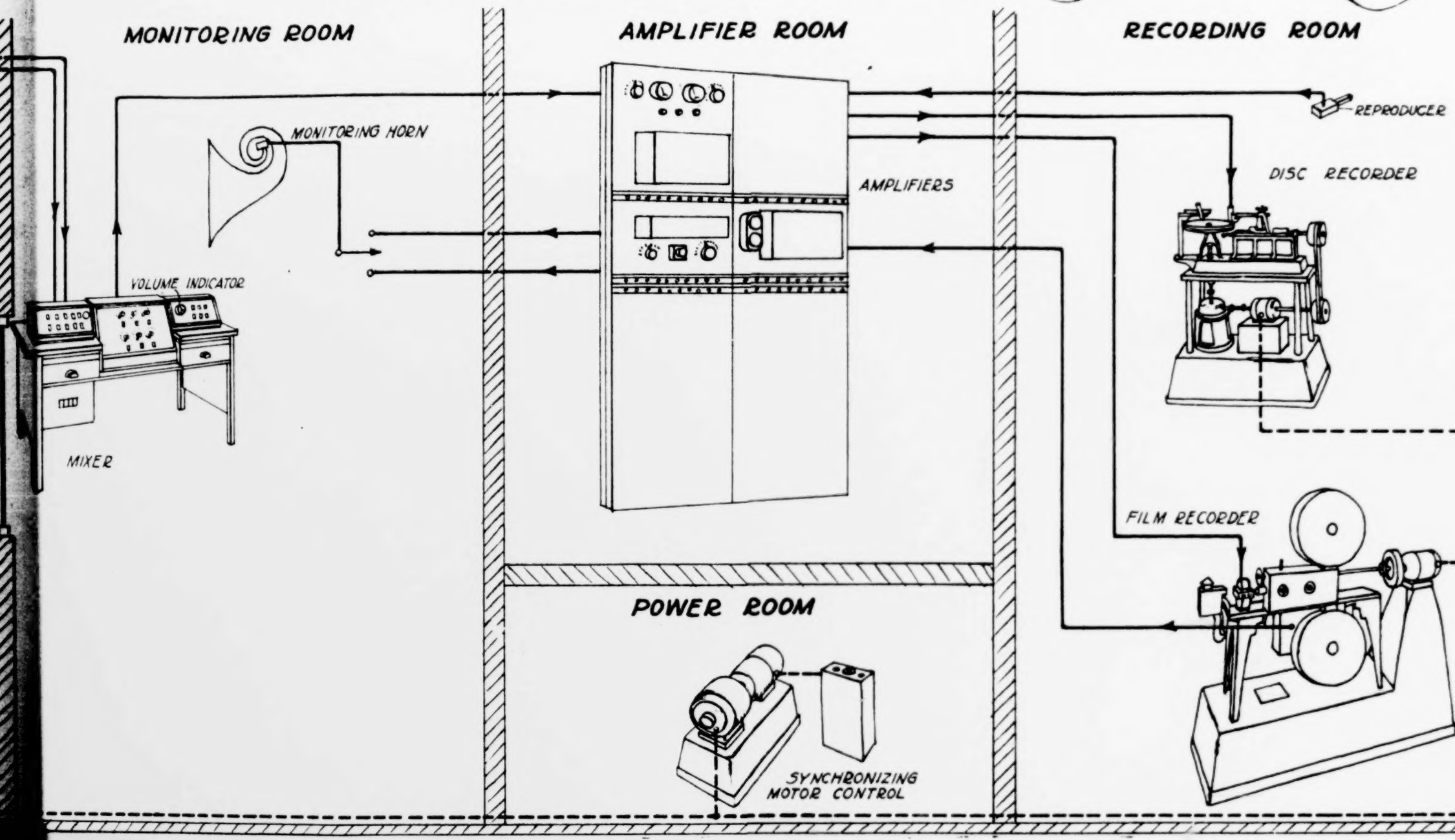

WESTERN ELECTRIC REPRODUCING SYSTEM

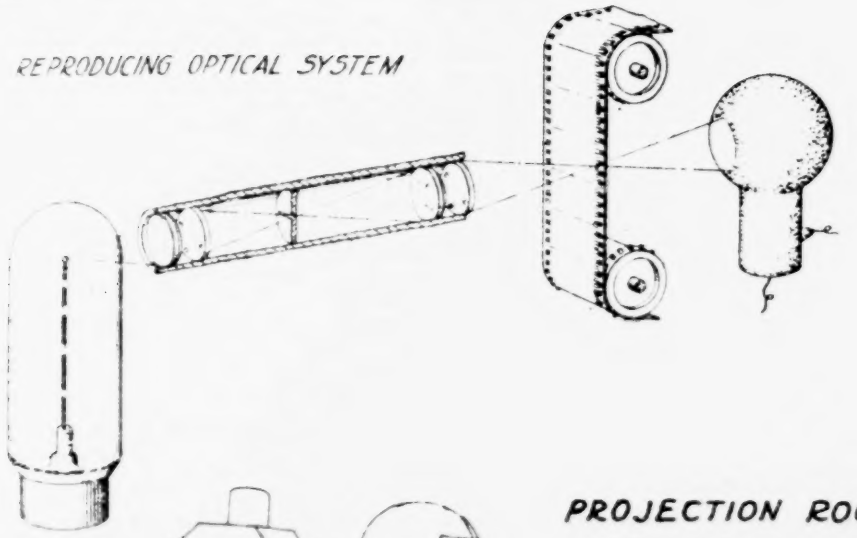

DEFENDANT'S EXHIBIT P

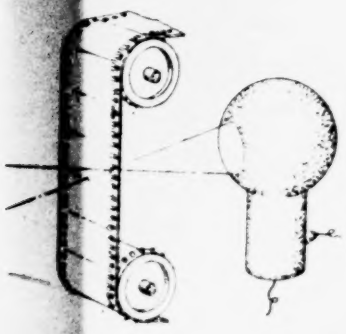

PROJECTION ROOM

WESTERN ELECTRIC REPRODUCING SYSTEM

STAGE

FILM

MONITORING HORN

AMPLIFIERS

FADER

HORN

SCREEN

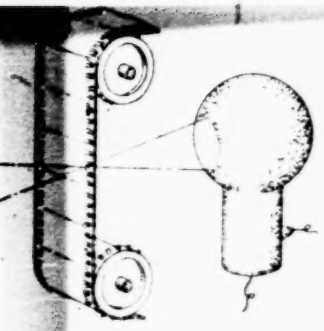

WESTERN ELECTRIC REPRODUCING SYSTEM

PROJECTION ROOM

STAGE

FILM

MONITORING HORN

HORN

AMPLIFIERS

FADER

SCREEN

5086-T

DEFENDANT'S EXHIBIT Q

DIV. 7 1913 (EX'R'S BOOK) 207-684

NUMBER (Series of 1900),

765,959 PATENT No. 1260337

Name Richard M. Craig

of San Antonio,

County of

State of Texas.

Invention Phonographic Attachment for Moving Picture Machines

	ORIGINAL	RENEWED
Petition	May 6, 1913	, 191
Affidavit	" " , 1913	, 191
Specification	" " , 1913	, 191
Drawing 3 sheets	" " , 1913	, 191
Photo Copy	, 191	, 191
First Fee Cash $15	May 6, 1913	, 191
" " Cert	, 191	, 191
Appl. filed complete	May 6, 1913	, 191

PARTS OF APPLICATION FILED

Division of App., No. , filed , 191

Examined and Passed for Issue Aug. 17, 1917 , 191

J. H. Kirkman Actg. Exr. Inv. Exr. Div.

Notice of Allowance Aug 23, 1917 , 191

Final Fee Cash $20 Feb 23, 1918 , 191

" " Cert , 191 , 191

Patented MAR 26 1918 , 191

Attorney R. S. & A. B. Lacey, City

Associate Attorney

5

(No. of Claims Allowed 20) Title as Allowed Phonographic Attachment for Moving Picture Machines (Cl. 88-1)

O.G. Cls. 1, 4, 9 and 20

765,959

MAY 6 1913

Petition.

To the Commissioner of Patents: 5086-". MBW.

Your petitioner (1) Richard M. Craig, citizen of the United States residing at San Antonio, in the County of Bexar, and State of Texas, P. O. Address 117 South Pinto Street, Station A, San Antonio, Texas, prays that Letters Patent may be granted to him for improvements in Phonographic Attachments for Moving Picture Machines, set forth in the annexed Specification.

And he hereby appoints the firm of **R. S. & A. B. Lacey**, of Washington, D. C., Robert S. Lacey, Anderson B. Lacey, Samuel N. Acker and Frederic B. Wright, constituting said firm (Registration No. 496), his attorneys with full power of substitution and revocation, to prosecute this application, to make alterations and amendments therein, to sign the drawings, to receive the Letters Patent, and to transact all business in the United States Patent Office connected therewith.

Signed at San Antonio, in the County of Bexar and State of Texas this 23 day of April 1913

Sign here. First name in Full. Richard M. Craig

(1) In case of assignment of the invention, application and oath must be made by actual inventor, even if patent issue to assignee.

SPECIFICATION.

To All Whom it May Concern:

BE IT KNOWN That I, Richard M. Craig, citizen of the United States residing at San Antonio, in the County of Bexar, and State of Texas, have invented certain new and useful improvements in Phonographic Attachments for Moving-Picture Machines, of which the following is a specification:

W-P March 24, 1913.

My invention relates to phonographic or "talking" moving pictures, and more particularly to the art of taking and projecting such moving pictures with the accompaniment of sound recording and sound reproduction respectively.

There are three essentials necessary for the complete success of moving pictures, namely, they must correctly simulate and reproduce natural motion which they do; they should reproduce the natural colors of the object, and they should reproduce sound as an accompaniment to the movement or the subject matter of the pictures.

Many attempts have been made to secure with the reproduction of moving pictures, the reproduction of sounds correlated therewith. Almost all these attempts have been made by operating the moving picture film in

conjunction with the ordinary phonograph or gramophone. The difficulty of using an instrument of this character to reproduce sounds correlated with the film is that the phonograph must of necessity be practically a separate machine from either the camera whereby the pictures are taken, or the projector whereby they are thrown upon the screen, and the with either the gramophone or the phonograph it is practically impossible to secure a sound record which shall be contermious with the moving picture film. The maximum sound record as used today will not run for longer than five minutes, whereas the moving picture scene may be very much longer. Further than this, it is practically impossible to run the phonograph or gramophone in synchronism with the film and this is a very vital necessity for the proper correlation of the sound record with the pictures. Again, if the film runs off or breaks, the phonograph must be stopped, and it is almost impossible to again adjust the film in proper correspondence and correlation with the sound record. The mere correcting up of the sound recording mechanism with the mechanism of the moving picture machine will not secure a complete correspondence and correlation between the sound and the pictures, for the reason that the film is liable to slip and to tighten or loosen upon the reels, and it would be extremely hard to adjust the sound record so as to correspond accurately with the motion of the picture. An accurate correspondence between sound with the event with which the sound is correlated, is, of course, absolutely necessary to prevent a disjunction which would entirely spoil the effect.

Furthermore, the phonographic record can naturally contain only so many words and this requires the film to

be made of a certain length only, this length corresponding with the phonographic record, instead of which the sound record should be made for and with the picture record of any possible scene or happening that might occur, and the sound record should have the same length as the scene record and not be limited as to length.

Again, the process of making phonographic records requires extra care and especially prepared staging. The phonograph is placed at or near the screen upon which the picture is to be projected and thus can not be run by the same mechanism which drives the moving picture film. The phonograph requires an extra attendant to place the records thereon. Furthermore, the picture record and the sound record have heretofore been taken separately and could not therefore be in accurate correspondence, nor could they ever be placed in accurate correspondence under those circumstances. It is a very difficult problem and requires an elaborate arrangement of costly mechanism to keep a film synchronized with a phonographic record. If the film happens to run off while exhibiting the phonographic record and the pictures on the film get out of time, it is practically impossible to get them in time again. If the film should happen to get torn in two or broken, which sometimes happens, and the film is cemented together, the words corresponding to the part torn out of the film can never be taken from the phonograph record, and this destroys the further use of the two together. In the case that a phonograph is used for the reproduction of sound, only one reproducing apparatus or one source of sound can be used which is the phonograph and which must be placed behind the screen. In the case of a theatre, it

leaves for

is obvious that it is of great advantage to be able to have the same sound issue from a number of sources located at various points around the theatre so that the sound may be heard [illegible]

The primary object of my invention is the provision of mechanism whereby a sound record may be made or reproduced synchronously with the taking or reproduction of moving pictures.

A further object is to so form the sound recording or reproducing mechanism that it may be used with ordinary moving picture taking or reproducing mechanism so that no change will be required in the mechanism now used for this purpose.

A further object is to provide means whereby the picture record and the sound record may be recorded simultaneously and by the same machine, under the control of the same operator and not individually and separately as they now are.

A further object is to provide means whereby the picture carrier, that is, the film, may also be the sound record carrier so that the pictures and the corresponding sounds shall be at all times in fixed relation to each other, taken simultaneously, reproduced simultaneously and with no possible chance of the sound record having its relation to the picture record in any way changed.

A further object is to so form the sound and picture carrier, in this case the film, that the sound may be reproduced without reproducing the picture, or the picture reproduced without reproducing the sound.

A further object is to so form the sound record that the sound vibrations may be translated into electrical

vibrations, and these in turn carried to various parts of the hall within which the machine is to be used.

A still further object is to so construct the machine both for taking and reproducing the pictures and accompanying sounds that the method of operation shall be extremely simple, both as regards the taking and making of sound records and the taking and making of picture records, and as to the simultaneous or synchronous taking or reproduction.

A further object is to provide mechanism whereby the sounds may be recorded upon the picture carrying film of moving picture machines and reproduced therefrom, this film being so formed that the picture record and the sound record may overlie each other without the sound record interfering with the picture record or vice versa.

A further object of the invention is to so form the film that the picture record may be taken in the ordinary manner and printed photographically upon one side or face of the film while the sound record may be taken photographically and printed upon the other face of the film.

A further object in this connection is to provide a film for carrying moving pictures and accompanying sound records, in which the sound record is formed by a substance which does not affect or impair the transmission of ordinary or white light but which will impair, affect or be more or less impervious to the passage of rays beyond the visible rays of the spectrum.

A further object is to form a sound record upon a film capable of transmitting light, this sound record being formed by material which is pervious to ordinary white

light but which is impervious to or effects the transmission of infra-red rays.

A further object is to so construct the mechanism for reproducing a sound record in conjunction with the projection of moving pictures that while the film shall move at one point intermittently to reproduce the pictures, the film shall move steadily at another point to reproduce the sound record, and in this connection to provide mechanism for causing the projection of white light through that portion of the film which is moving intermittently and causing the projection of invisible rays through that portion of the film which is moving steadily, and further in this connection to provide in combination with the means for projecting the invisible rays through said film, sound transmitting mechanism of such character as to be operated by the action of these invisible rays to thereby reproduce the sound record on the film.

My invention is illustrated in the accompanying drawings wherein:

Figure 1 is an elevation partly sectional of a moving picture machine so constructed as to reproduce a corresponding sound, the figure also showing the screen upon which the picture record is thrown and a loud-speaking phone disposed behind the screen.

Fig. 2 is a vertical section on the line 2-2 of Fig. 3 of a camera for taking moving pictures making correlated sound records.

Figure 3 is a front elevation of the camera shown in Figure 2.

Figure 4 is a diagrammatic plan view of a hall or auditorium showing the arrangement of phones for trans-

mitting the sounds reproduced by my mechanism.

Figure 5 is a fragmentary view of one side of a film showing moving pictures thereon.

Figure 6 is a face view of the opposite side of a film showing photographic sound records thereon.

Figure 7 is a view of a composite film showing the position of the sound records with relation to the pictures.

Figure 7a is a fragmentary section of the film shown in Figure 7.

Figure 8 is a face view of the sound record side of a film but illustrating a slightly different record on the film.

Figure 9 is a diagrammatic view of a telemeter as used by me for the purpose of reproducing sound vibrations.

Figure 10 is a diagrammatic view of another form of sound recording mechanism.

Sheet 7 (2)
A'

Corresponding and like parts are referred to in the following description and indicated in all the views of the accompanying drawings by the same reference characters.

My invention is based upon the fact that infra-red rays are invisible but that these rays will affect a properly sensitized photographic film, and that these infra-red rays will affect various forms of electrical phonographic receivers or sound transmitting devices. Infra-red rays may be passed through an ordinary photographic film or the film of a moving picture ~~without being visible and~~ without interfering with the proper projection of the picture by moving picture projecting apparatus. If a ~~picture~~ film ~~strip~~ is prepared, therefore, having on one side the ordinary photographic reproductions of pictures, and on the other side a photographic sound record, capable of being reproduced only by ~~the~~ infra-red rays, the sound record will not interfere with the passage of white light to and through the pictures and the presence of the pictures will not interfere with the passage of infra-red rays through the strip. On one side of the film or the strip, therefore, would be the ordinary picture record and on the other side would be a printed photographic record of sound, which record would be transparent to ordinary visible light but ~~which~~ record would more or less intercept the infra-red rays to produce variations in the projection of these rays, these variations being used to affect sound transmitting apparatus as will be later stated. Infra-red rays are below the ordinary visible spectrum. They are invisible to the naked eye and are very penetrating and are subject to the same optical laws as ordinary light.

Many substances will cut off visible light entirely but will let the infra-red rays pass nearly perfectly. Vulcanite, iodine, bromine and many other substances will permit the passage of these infra-red rays. Many substances such as alum, cupric chloride, water, oxygen, carbonic acid gas, very thin metallic silver and selenite will, on the contrary, permit the passage of visible or white light but will cut off more or less the passage of the infra-red rays.

Ordinary celluloid, of which material the moving picture film is usually constructed, is very transparent, both to the visible light rays and to the infra-red rays. By coating one side of a strip of celluloid, therefore, with a substance impervious to the white light rays and the other side with a translucent substance impervious to the infra-red rays, neither of the coatings would interfere with the passage of these rays and both records, the picture record and the sound record, could be combined on one film.

For the visible light picture record, there are many photographic prints (such as most any of the present forms of positive prints) which would interfere not at all with the passage of the infra-red rays, and it is therefore only necessary to provide a proper transparent coating on the strip or film which will intercept more or less the infra-red rays and yet will not affect the passage of the rays of white light.

One of the substances which would permit ordinary light to pass but which is opaque or impervious to the infra-red rays is very thin metallic silver, but I do not wish to be limited to this as any material which would cut off,

intercept, destroy or reflect back the infra-red rays would be equally suitable. This would be done by any substance having a high percentage of water of crystallization or a high percentage of water of constitution, a high percentage of selective reflection, or a high percentage of selective absorption. This infra-red ray intercepting substance is to be combined with gelatine, as for instance, the gelatine of the film, this gelatine acting as or being a medium for carrying said substance and this medium being subject to the photographic action for obtaining the necessary sound record.

In Figs. 5, 6, 7 and 7^a I show a portion of a film or strip of moving pictures designed to be used in my invention, both for the purpose of taking the moving pictures and for the purpose of reproducing them. Fig. 7^a is an enlarged sectional view, as it may be termed, and in this figure, 2 designates the body of the film, 3 a coating upon which the photographic picture print is made or taken, and 4 a coating of a substance which is capable of being acted upon photographically by ordinary light, and which will act as a medium to carry a substance which will act to intercept either partially or entirely ~~said~~ infra-red rays to thereby cause the reproduction of sound by electrical transmission devices. Fig. 5 shows the face view of the film, as it may be termed, with moving pictures thereon. Fig. 6 shows the reverse side of the film and illustrates diagrammatically the sound record as photographed upon the film. Fig. 7 illustrates the compound record and shows that the sound record extends entirely across the film and therefore underlies the picture record.

While in Figs. 6 and 7 the sound record is shown

as being made up of lighter or heavier lines or ~~perpendicular~~ parallel striations extending entirely across the strip from one edge to the other, it is possible to have one record to extend from one marginal edge to the middle of the strip and another record to extend from the middle of the strip to the marginal edge. Such a record is shown in Fig. 8 wherein 4^a indicates one sound record and 4^b another sound record. The film shown in Fig. 8 is particularly adapted for use in a manner hereafter described.

It is, of course, necessary that the sound record and the picture record should be made simultaneously so that there will be complete synchronism between the sound record and the events shown by the pictures. In Figs. 2 and 3, 5 designates a double camera which will take moving pictures by means of the ordinary moving picture camera mechanism and which is provided with a compartment 6 containing the photographic camera proper having a compartment 7 which contains what may be termed the sound camera mechanism for making a negative sound record.

Inasmuch as the mechanism used for taking the moving pictures is of the ordinary form, it requires no special description. This mechanism is actuated by means of the shaft 8 having the usual crank 9. The compartment 7 wherein the sound photographing mechanism is disposed, is preferably divided into an upper and a lower reel compartment in which are located respectively the reels 10 and 11. The film or strip 12 is fed down from the upper reel 10 over the rollers 13 and 14 to the lower reel, this lower reel being mounted upon the shaft 8 and being driven therefore synchronously with the picture apparatus. Immediately behind that portion of the film 12 between the rollers

13 and 14 is a diaphragm 15 having therein a ~~small~~ narrow slit 16.

Behind the diaphragm 15 is disposed the tube 17 of a manometric flame apparatus. The flame 18 of this apparatus is disposed immediately in front of a mirror 19 whereby the rays of light are focused upon the film through the slit 16. When the film 12 is in ~~its ordinary~~ position, there will therefore be a bright line of light thrown upon the face of the film ~~12~~. The manometric tube 17 extends down into a chamber 20 from which extends a gas pipe 21 leading to any suitable source of gas. Above the flame 18 is disposed a chimney 22 having baffle plates 23 therein, which chimney permits the outward passage of the products of combustion but prevents the flame 18 from being deflected by down drafts of air.

The front of the chamber 20 is provided with a diaphragm 24 and from this diaphragm there extends a megaphone 25 which as illustrated forms part of the camera body, this megaphone being of course enlarged at its forward or front end and gradually converging until it opens into the diaphragm chamber.

It is to be understood, of course, that the film used for taking the moving pictures is shifted intermittently by mechanism as ordinarily used in moving picture machines, while the film which is used for taking the sound record moves steadily and continuously. The film or strip 12 and the film or strip upon which the moving pictures are to be taken is the same as the ordinary negative moving picture films.

While I have illustrated a manometric flame for the purpose of photographically recording sound upon the

film 12, I wish it understood that I may use a speaking arc in place of the manometric flame and that I do not wish to be limited to any particular apparatus for making this photographic sound record as it is obvious that many different forms of apparatus may be used for this purpose. The manometric flame apparatus is shown purely for purposes of illustration.

With the manometric flame apparatus, the operation of the camera is evident, the camera is intended to be used precisely the same as an ordinary moving picture camera. While the picture is being taken, the film of the picture taking apparatus moves intermittently as before stated while the film of the sound apparatus moves steadily. The vibrations of the air caused by the sound waves being recorded, affects the diaphragm in a way well understood, and this, in turn affects the manometric flame. The variations of pressure in the manometric tube 17 ~~caused thereby~~ will cause variations in the intensity of the flame and consequently variations in the rays of light passing through the slit 16. As a consequence a photographic record of the sound will be made upon the sensitized strip, this sound record showing the variations in intensity of the light just in proportion to the amplitude of the sound vibrations. The sound record shown in the developed negative film as alternately light and dark striations which while having the appearance of great irregularity, are in reality exceedingly regular and harmonic, only changing their order with the change of the ~~corresponding~~ sound vibrations ~~Each sound gives its own group of lines and the sounds~~ which may be easily recognized and read ~~from the photophonographic record so produced.~~

The record so produced and above referred to is the same form of record as is used in the photographone.

of Ruhmer and the reproduction of speech or sound from such a photophonographic record has been found to be astonishingly clear and quite strong, much clearer and purer than the reproduction of the ordinary wax cylinder phonograph. From a photographic sound record as above described, it is possible to secure many reproductions, each of which will reproduce back the original sounds with equal exactitude

B

It will be noted from what has gone before that so far the negative of the sound record and the negative of the picture record have been made upon separate strips or films. It is necessary, therefore, that these two negatives should be photographically printed upon one film or upon opposite sides thereof. In printing these records, the picture record would be printed as usual on one side of the moving picture film and fixed, the fixing solution however not being allowed to touch the other side of the film or strip. On the other side of the film there is a coating 4 of the substance before referred to which is impervious or opaque to infra-red rays, one such substance being very thin metallic silver. This substance which is opaque or impervious to the infra-red rays is combined with gelatine or other suitable medium. After the picture side of the film has been printed, this coating 4 is sensitized by brushing on a solution having a proper proportion of bichromate of potassium or bichromate of ammonium. This sensitizes the gelatine and makes it sensitive to light for photographic action. This coating 4 could not be sensitized previously as in printing the pictures the sensitiveness of the coating 4 to light would be destroyed. The gelatine medium wherein the thin metallic silver for instance is carried, would

simply act to hold this metallic silver or like substance and act as a transparent medium subject to the photographic action of light to thereby obtain a photographic record of the sound variations or sound record. The sound record which has been taken as previously described would be printed on the coating 4 of the film shown in Figs. 5 to 7^a by means of ordinary light, ordinary light affecting the now sensitized gelatin, and after printing in this manner the face 4 of the film is soaked in water which dissolves the gelatin that has not been acted on by the light. This soaking of the film will leave and take off horizontal stretches of transparent gelatin extending across the film, and leave or cut off the element or substance carried in the gelatin and which acts to cut off the infra-red rays. The horizontal stretches or lines of gelatin left upon the side 4 of the film corresponds to the sound record.

Thus on one side of the film 2 there would be a picture record to be reproduced by means of ordinary light, which light passes uninterruptedly through the clear transparent gelatin while on the other side would be the sound record formed by bands of gelatin corresponding to alternate light and dark lines on the negative and adapted to be reproduced by means of infra-red rays which would pass readily through the entire film except where purposely cut off by the substance impervious to red rays contained in the gelatin ~~bands or stretches~~ left upon the film. It is ~~again~~ reiterated that the white light would be entirely unaffected by passage through the coating 4 and that the infra-red rays while being affected by the coating 4 would be unaffected by the coating 3 containing the picture record.

Generally speaking, for the reproduction of the picture record and the sound record, ordinary white light

is passed through the picture record while infra-red rays (invisible to the eye) are passed through the sound record and fall upon suitable instruments to be hereafter described whereby these infra-red rays will cause the reproduction of sound vibrations. There are a number of instruments that are sensitive to infra-red rays. The tasimeter invented by Thomas A. Edison will measure heat accurately down to the ten-thousandth part of one degree, but this instrument is probably too sluggish for the purpose of reproducing sound record. The selenium cell when sensitized by Abney's process is sensitive to infra-red rays and may be used for the purpose. I believe, however, that the bolometer is best adapted for the purpose for several reasons, but principally because the element upon which the light falls can be made more nearly to coincide with the small horizontal lines of the photographic sound record. The width of the horizontal lines of the sound record would be regulated according to the speed of the film. Thus for instance where the Urban-Smith natural color films are used, these horizontal lines would be ~~larger~~ wider on account of the greater operating speed of these natural color films.

In the reproducing apparatus such as is hereafter described, infra-red rays are projected against the film containing the sound record and the picture record by suitable prisms such as prisms of rock salt, fluorite or Jena glass and focused through a narrow slit onto the film and after passing through the film fall on the reproducing instrument such as the bolometer. Connected in series with the bolometer or through similar apparatus would be loud-speaking phones such as the auristophone, the Edison or the Ducaret loud-speaking phones.

Moving pictures are reproduced by intermittently moving the film. It is therefore plain that it would be impossible to use this film during its intermittent motion or at the point through which the white light rays are projected for the purpose of reproducing the sound record, it being plain that the sound record must be reproduced as it was taken, namely, by a continuous ~~and uninterrupted~~ movement of the film. I overcome this difficulty therefore by passing the infra-red rays through the film at a point on one side or the other of the point where the picture projecting rays are passing through, that is, at a point where the film is moving continuously and steadily.

An apparatus whereby the moving pictures may be projected and the sound record synchronously reproduced, is illustrated in Fig. 1. This figure shows an ordinary moving picture projecting apparatus comprising a table or base 26 supported in any suitable manner and supporting upon it the lamp housing 27 wherein there is disposed the ordinary right angle arc lamp 28 such as used in moving picture machines. Such a right angle arc is particularly adapted as a source of infra-red rays while supplying at the same time the ordinary white light for the pictures. The light is projected from the lamp housing in any usual or suitable manner onto the film 2. This film is unrolled from an upper film reel and passes down through the usual moving picture projector 29. This mechanism contains means for intermittently shifting the film while the shutter of the mechanism is closed. Inasmuch as there are various types of this mechanism and it is thoroughly well known, it is not deemed advisable to describe the mechanism in detail.

The white light after passing through the fil
2 at the point a, is projected onto a screen A in the usual manner. The film after it passes below the aperture plate of the moving picture machine no longer moves intermittently but is ~~shifted~~ moved continuously and I have illustrated the film 2 as being passed around a series of rollers 30 and in front of the aperture of a selenium cell or like apparatus, this cell being designated 31. After passing in front of the aperture of the selenium cell the film 2 passes around a lower or receiving reel 32 which may be connected up with any suitable mechanism whereby the reel may be rotated continuously in a direction to wind up the reel 2 at a suitable rate of speed.

Disposed immediately below and in line with the meeting point between the carbons of the angular arc lamp 28, there are series of lenses 33. These lenses are preferably made of rock salt or fluorite. The infra-red rays passing through these lenses 33 are transmitted by means of prisms 33a of Jena glass or other suitable material to the aperture of the selenium cell 31. A diaphragm 34 is so disposed as to cause these rays to fall in the form of an elongated narrow or transversely extending beam upon the face of the selenium cell 31. Preferably the lenses 32 and the prisms 33a are contained within a casing or housing 35.

The selenium cell 31 is formed in any usual or suitable manner and requires no particular description as it is the ordinary form of cell except that preferably the cell is treated by Abney's process so as to make it extremely sensitive to the infra-red rays. Mounted behind the screen or in any suitable portion of the exhibition hall is a loud-speaking phone designated 36 in Fig. 1. This is a

loud-speaking electric telephone and is connected in series by the wires 37 with the selenium cell 31.

The operation of the picture and sound reproducing apparatus illustrated in Fig. 1 is of course obvious. The pictures are reproduced in the usual manner, but after the strip or film has passed beyond the specific moving picture mechanism, the strip passes in front of the selenium cell and the transverse bands or lines of the sound record on the film will act to more or less intercept, absorb, reflect or otherwise stop or impede the passage of the infra-red rays. Where the infra-red rays fall with full force upon the selenium cell, the cell will have a certain degree of electrical resistance. Where the infra-red rays are intercepted or their intensity changed in any manner, the electrical resistance of the selenium cell will vary correspondingly. There will therefore be a constant variation of the electrical resistance of the cell as the record film passes in front of the cell, and this continual variation of resistance will, in a manner well known, affect the receiver of the telephone transmitter 36 and thereby cause vibrations of the air corresponding to the sound vibrations and the sound will be reproduced. All of the mechanism heretofore described is well known by itself. The photophone operates on the same principle as the sound reproducing mechanism heretofore described, but using ordinary white light.

Inasmuch as sound reproductions may be secured by a large variety of electrical apparatus, affected by variations of rays falling upon it, I do not wish to be limited to the use of a selenium cell or any other specific apparatus for the purpose of translating the photographic

sound records into air vibrations as any other mechanism having the same general function may be substituted for the selenium cell.

For purposes of illustration, I have shown in Figs. 9 and 10 two other forms of mechanism adapted to translate the vibrations of light rays into sound. Fig. 9 illustrates the bolometer as used for this purpose. The bolometer will measure heat accurately down to the ten-millionth part of a degree. In Fig. 9 38 and 39 indicate two thin platinum strips forming the two arms of a Wheatstone bridge normally in perfect balance. The infra-red rays passing through the film 2 in the form of a thin beam fall on one of these arms or strips, namely the strip 39. This disturbs the balance of the bridge. This Wheatstone bridge is connected as illustrated in the diagram to a telephone transmitter 40 which is the transmitter of any one of the loud-speaking phones previously referred to. The current passing through this transmitter will vary in correspondence with the variations of the red rays falling upon the strip 39 and therefore the photographic sound record will be reproduced as air vibrations. The action of this instrument is virtually instantaneous in its operation and extremely sensitive.

Figure 10 is a diagram of the Edison tasimeter which may also be used for the purpose of translating photographic sounds into sound vibrations. In this figure 41 illustrates a rod of vulcanite supported against a fixed abutment at one end and at the other end abutting against a movable disk 42. This disk bears in turn against a carbon button 43 disposed between the movable disk 42 and a fixed disk of metal 42a. The two metal disks 42 and

42[a] are connected in circuit to a loud-speaking phone 45, the current passing more or less between the disks 42 and 42[a] through the carbon button as it is compressed. The variations in these red rays cause this vulcanite to contract and expand thus compressing the carbon button 43 between the metal pieces 42 and 42[a], causing variations in the current corresponding to the variations in the strength of the rays. ~~This is extremely sensitive and forms one means of translating the photographic record into sound vibrations.~~

While I have illustrated three forms of electrical sound reproducing apparatus, I wish it understood that I may use other forms. Thus I might use a thermopile, especially a "Bi-Ag", a selenium cell made sensitive to infra-red rays by Abney's process, or any other delicate heat measuring instrument of like character.

While in Fig. 1 and Figs. 9 and 10 I have shown only one telephone transmitter, this transmitter being shown in Fig. 1 as being disposed behind the screen A, it will be understood that with the electrical sound reproducing apparatus I may use a plurality of telephone transmitters disposed at various portions of an amusement hall, not only behind the screen but at the sides of the hall. This is obviously of great advantage and is not possible where ordinary sound reproducing mechanism is used.

Such an arrangement of phones is illustrated in Fig. 4 wherein the picture and sound projecting apparatus is designated 47 and illustrated diagrammatically, the picture being received upon the screen 48. As illustrated, there are three loud-speaking telephone receivers 49 disposed behind the screen 48 and a plurality of loud-speaking transmitters disposed along the side of the

hall and facing toward the audience. Thus the sounds reproduced may be distinctly heard by everybody in the audience. While I have illustrated in Fig. 4 all of the phones as being connected in one circuit and as being actuated by one selenium cell, bolometer or tasimeter, it is to be understood that when a film like that shown in Fig. 8 is used with two records placed in parallel position upon the film, a plurality of sets of sound reproducing apparatus is to be used. Thus with the film shown in Fig. 9 there will be two beams of infra-red rays projected through the film, each falling upon a separate bolometer, tasimeter or like apparatus, and each such reproducing mechanism being electrically connected to one of a series of sets of phonographic transmitters. By using the film shown in Fig. 8, a dialogue may be reproduced so that the sounds will issue from transmitters set at opposite sides of the hall or at opposite points behind the screen, thus causing the dialogue to seem more natural than if it apparently issues from one point only. It is obvious that a larger number of records could be placed upon the same film and thus the sounds be caused to issue from a plurality of points behind the screen or around the hall.

The two main features of my invention upon which the invention is based are in the first place the provision of a film capable of receiving not only the photographic prints of the pictures to be projected, but also the photographic record of the sound and the use with these films of invisible rays for the purpose of reproducing the sound record. The other important and vital feature of my invention resides in the provision of means whereby the sound record may be taken from [illegible] portion of the film which is

moving continuously while that part of the film through which the rays of white light are projected is moved intermittently.

In printing the sound record upon the strip or film 2, the sound record is started a sufficient distance beyond the starting point of the picture record so that at the instant that any one event is being projected on the line x, the sound record corresponding to this event is passing the axis of line z. Inasmuch as in taking or making the picture record and the sound record two separate negative films or strips are used, it is entirely possible in printing these records upon the film 2^a to displace the sound record with relation to the picture record in the manner stated. While I have shown the axis a of the infra-red beam as being about twelve inches below the axis x of the white light beam, I wish it understood that the two axes may be much nearer than this and that the drawing in Fig. 1 is purely illustrative in this regard, and further that I may pass the infra-red rays through the strip 2^a above the picture projecting mechanism and above the axis x

~~While I have referred to gelatine as being the~~ medium for carrying the substance which will intercept the invisible rays or be opaque thereto, I wish it understood that I may use a film composed of a body of collodion or other similar substance which will be flexible ~~and permit the passage of both visible and invisible rays.~~ While I have referred to the lenses and prisms for focusing and transmitting the invisible rays as being made of rock salt, or Jena glass, it is of course obvious that they may be made of other material such as flourite, or that I may use metallic reflectors.

By using a film having thereon a plurality of sound records, great naturalness could be secured as before stated by the fact that the transmitters translating the variations in the sound record into sound vibrations, could be located nearer to or farther from the inner side of the screen, or could be located on opposite lateral sides of the screen or stage so that the voices will apparently be projected in accordance with the positions of the actors in the moving picture. It is obvious also that in place of using a camera having a megaphone for transmitting sounds to the "speaking arc" or the manometric flame, sensitive microphone transmitters might be used at various portions of a stage upon which actors were acting a moving picture play, and that the vibrations of these microphones could be transmitted electrically to diaphragms placed within a camera to thereby transmit the sounds proceeding from the several microphones to the several flames or speaking arcs to be recorded in separate columns upon the sound record film.

The double or plural record illustrated in Fig. 8 could also be used to carry two or more languages. This would be of value in lecture courses. In many cities of the United States, moving picture films are first used in theatres frequented by English speaking persons and afterwards used in theatres where other languages are spoken, such as the Italian or Mexican theatres. It is obvious that where the moving picture dialogue is given originally in English and Spanish, for instance, and this English and Spanish dialogue is recorded upon the same film, it would be possible to reproduce either the English dialogue in connection with the moving picture film or repro-

Spanish dialogue. By separating the audience, two languages might be reproduced simultaneously while one picture was reproduced upon the screen. Likewise these plural records could be used for recording and reproducing music of separate instruments, or vocal music and an instrumental accompaniment. I wish it understood that all of these uses above outlined are within the scope of my invention.

In Fig. 11 I show diagrammatically a "Bi-Ag" thermopile as above referred to. As this thermopile is well-known an extended description is not necessary. The thermopile consists of a frame 50 having an opening at its middle and extending across this opening are a plurality of couples 52 composed of connected bismuth and silver wires. These couples are joined by overlapping plates of tin, the junctions formed by the plates being covered with platinum black. The frame 50 with its couples of platinum and silver is supported inside of a casing 51 having a narrow slit through which the infra-red rays are projected upon the junction plates. The couples of silver and bismuth are connected in circuit with a receiver of a loud-speaking telephone in the manner heretofore described. A thermopile of this character is fully described in Bulletin No. 4 issued by the Bureau of Standards on Instruments and Methods of Radiometry. Therefore no extended description of the thermopile is necessary.

In case the talking picture machine before described is desired to be used in very large theatres where it would take a sound a perceptible time to travel the distance and where it would be possible to see the picture, therefore, before hearing its corresponding sound, the following arrangement could be made. After the system has been brought to a standard the instrument sensitive to the infra-red rays would always be just a certain distance from the lens or just a certain number of pictures below the lens. In a large theatre, therefore, it would be only necessary to slightly advance the instrument, that is, move it a bit nearer to the lens, in which case the sound of a given event would slightly precede the picture but the sound would reach the observer at the same time that the picture was shown.

What I claim is:

-1-

~~A composite picture and sound recording film~~ having thereon a series of consecutive pictures and a corresponding photographic sound record.

Cancelled per

1. A composite picture and sound recording film having on one side thereof a series of consecutive pictures and on the other side thereof a corresponding photographic sound record, the records being in overlapped relation.

2. A composite picture and sound recording film having on one side a series of consecutive pictures formed to permit the passage of invisible light rays and on the other side thereof a corresponding photographic sound record formed to permit the passage of visible rays but to intercept or affect the passage of invisible rays, the records being in overlapped relation.

3. A composite picture and sound recording film having in conjunction a series of consecutive pictures adapted to permit the passage of invisible light rays and having in conjunction therewith a corresponding photographic sound record adapted to permit the passage of invisible light rays, the records being in overlapped relation

4. A composite picture and sound recording film having on one side a series of consecutive pictures adapted to permit or affect the passage of visible rays of white light and having on the other side and superposed upon

the pictures a corresponding photographic sound record adapted to permit the free passage of rays of visible light but to intercept or affect the passage of rays of invisible light.

5. A composite picture and sound recording film having thereon a series of consecutive pictures adapted to affect or intercept the passage of rays of visible light and on the other side a corresponding photographic sound record adapted to intercept or affect the passage of infra-red rays, The records being in overlapped relation.

6. A composite picture and sound recording film for moving picture talking machines, of transparent material having on one side a picture record affecting rays of ordinary visible light, and on the other side a sound record permitting the passage of ordinary visible light but affecting or intercepting the passage of invisible light rays, The records being in overlapped relation.

7. A composite picture and sound recording film for moving picture talking machines having on one side a series of consecutive pictures intercepting or affecting the passage of white and visible light and having on the other side and extending entirely across the film a photographic sound record formed of a substance permitting the free passage of ordinary white light rays but affecting or intercepting the passage of invisible light rays.

8. A sound recording film having thereon a photographic medium and a ~~substance~~ medium adapted to cut off, intercept or otherwise affect rays of invisible light, the medium being in overlapped relation.

-10-

The combination with a sound record comprising a transparent film having thereon a photographic sound record composed of a substance which will intercept, cut off or affect the passage of invisible light, of electrical means for reproducing sound, and means for affecting the current passing through the sound reproducing means, said last named means being in turn affected in its electrical action by the rays passing through said film.

9. ~~-11-~~ A sound recording film having thereon a photographic sound record composed of a substance having a high percentage of water of crystallization or a high percentage of water of constitution, a high percentage of selective reflection or a high percentage of selective absorption.

10. ~~-12-~~ A photographic sound record comprising a transparent film having thereon a sensitive coating comprising a substance having a high percentage of water of crystallization or a high percentage of water of constitution, a high percentage of selective reflection or a high percentage of selective absorption, and a medium carrying said substance and subject to the photographic action whereby the sound records may be photographically obtained.

11. ~~-13-~~

A sound reproducing and moving picture film of material transparent to visible and invisible light having on one side a picture record and on the other side a photographic sound record, the picture record being of material permitting the free passage of light rays beyond or below the visible spectrum but intercepting or affecting light rays proceeding within the visible spectrum, the sound record being formed of material permitting the free passage of visible light rays but affecting or intercepting the passage of rays beyond the visible light spectrum, the records being in overlapped relation.

~~-14-~~

The method of making composite picture and sound record films which consists in taking photographic picture records on a negative film, taking photographic sound records on a negative film, printing the picture records on one side of a positive film, printing the photographic sound records on the other side of the film, said last named side having thereon a sensitive coating of material capable of affecting the passage of invisible rays but not affecting the passage of visible light rays.

13. ~~-15-~~

The method of making composite picture and sound record films which consists in taking photographic picture records on a negative film, taking photographic sound records on a negative film, printing the picture records on one side of a positive film transparent to visible and invisible light rays and printing the sound record on the

opposite side of the said film, said side having a photographically sensitized coating of material permitting the free passage of visible light rays but affecting or intercepting the passage of invisible light rays.

-16-

The method of displaying composite sound and corresponding picture records from a moving picture film which consists in intermittently moving the film at one portion thereof, steadily moving the film at another portion thereof, projecting light through the picture record at the intermittently moving portion of the film to display the pictures thereon and projecting light through the sound record at the steadily moving portion of the film and translating the variations of said light into sound vibrations.

-17-

The method of displaying a composite sound record and moving picture film which consists in intermittently moving the film at one portion thereof, steadily moving the film at another portion thereof, projecting light through the picture record at the intermittently moving portion of the film to display the picture thereon, and projecting light through the sound record at the steadily moving portion of the film, allowing said last named rays of light to fall upon an element whose conductivity or resistance will vary to correspond with the variations of said light rays and translating said variations in conductivity or resistance into sound vibrations.

-18-

The combination with a composite sound and picture

record comprising a film transparent to visible and invisible light, said film having thereon a photographic picture record adapted to permit the free passage of rays of invisible light but to intercept or affect the passage of rays of visible light and having thereon a sound record composed of a substance adapted to permit the free passage of rays of visible light but intercept or affect the rays of invisible light, of means for intermittently moving one portion of the film, means for steadily moving another portion of the film, means for projecting a beam of visible light through the intermittently moving portion of the film, means for projecting a beam of invisible light through the steadily moving portion of the film, and means in the path of said last named beam for translating the light variations of the beam into sound vibrations.

-19-

Means for reproducing moving pictures and corresponding sounds including a film transparent to visible and invisible light rays and having on one side thereof a series of consecutive photographic pictures adapted to permit the free passage of invisible rays but intercept or affect the passage of visible rays of light and on the other side a sound record adapted to permit the free passage of rays of visible light but intercept or affect the passage of invisible rays, a source of visible light rays, means for intermittently moving the film across a beam of light proceeding from said source to thereby project moving pictures, a source of invisible rays, means for steadily moving the film across a beam proceeding from said source of invisible rays to thereby project the sound record, and means in the path of said last named rays after they pass through the

film adapted to translate the variations of intensity in said beam of invisible rays into sound vibrations.

-20-

Means for reproducing moving pictures and corresponding sounds including a source of visible rays and a source of invisible rays, a moving picture film having on one side thereof a series of consecutive pictures designed to affect the passage of visible rays but permitting the free passage of invisible rays and having on the other side thereof a sound record adapted to affect the passage of invisible rays but permit the free passage of visible rays, means for intermittently moving the film across a beam proceeding from the source of visible rays, means for steadily moving the film across the beam of rays proceeding from the source of invisible rays, a telephone transmitter, and a receiver upon which the beam of invisible rays fall, said receiver being connected in series with the telephone transmitter, the resistance or conductivity of the receiver being altered by being subject to invisible rays.

-21-

Means for reproducing moving pictures and corresponding sounds including an electric lamp having angularly disposed carbons, means for projecting visible light rays from the meeting points of said carbons, means for projecting invisible rays from the meeting points of said carbons in a path separate from the path of the visible rays, a film having thereon a series of consecutive photographic pictures adapted to intercept or affect the passage of visible rays and having a sound record adapted to permit

the free passage of visible rays but to intercept or affect the passage of invisible rays, means for intermittently shifting the film across the path of the visible rays to thereby project the moving pictures, and means for steadily moving the film across the path of the invisible rays to thereby project the sound record, means for translating the variations in the invisible rays into sound comprising a receiver electrically sensitive to the action of invisible rays, and a transmitter electrically connected to said receiver.

-22-

A camera for taking moving pictures and simultaneous corresponding sound records, said camera being divided into two compartments, a moving picture film mounted in one of said compartments, means for intermittently moving said film, photographic lenses coacting therewith, a steadily moving photographic film in the other compartment, a source of light, means for condensing rays from said source of light upon said last named film, a megaphone, and means acted upon by the sound vibrations in said megaphone affecting the intensity of the light in correspondence with said sound vibrations.

-23-

The combination with a moving picture camera including film feeding means, of a sound recording camera including film feeding means, a source of light, means for causing a beam of light to fall upon the film, means for causing sound vibrations to correspondingly affect the beam of light to thereby form a photographic record of said variations upon the film, and means for synchronously feeding both of said films.

-24-

A camera for taking moving pictures and coincidentally making a photographic sound record, comprising a camera compartment, means therein for photographically taking moving pictures upon a film, a conjoined compartment, reels therein, a sound record photographic film mounted upon said reels and moving before a slit, a manometric tube disposed behind the slit, a chamber from which said tube extends, said chamber being connected to a source of gas, a diaphragm forming one wall of the chamber, and a megaphone forming the lower portion of the camera but connected to said diaphragm.

-25-

A sound record film for sound reproducing machines having thereon a plurality of parallel records.

-26-

The combination with a sound record film having thereon a plurality of parallel sound records, of separate means of reproducing said records simultaneously.

-27-

A sound reproducing film having thereon a plurality of columns of correlated sound records, and photographenic means for reproducing said records.

~~-28-~~

18. A sound recording film comprising a strip transparent to visible and invisible rays and having thereon a plurality of correlated sound records, the sound records being formed by a substance intercepting or affecting the passage of invisible rays, means for passing invisible

Reserved for [illegible]

rays through said sound records, and means for translating the variations in intensity of said rays into sound vibrations.

-29-

The combination with a transparent film having thereon a plurality of sound records formed of a substance intercepting or affecting the passage of invisible rays, and means for steadily moving said film, of a receiver adapted to have its electrical conductivity or resistance varied by the action of invisible rays, means for projecting invisible rays through said film upon said receiver, and a plurality of telephone transmitters connected in series with said receiver.

13. A film for use in reproducing pictures and sound in synchronism having thereon a plurality of photographic records, each adapted to intercept or affect a certain class of light rays and permit rays of another class to pass unimpeded therethrough, each record intercepting or affecting that class of light rays which is permitted by the other record to pass freely, the records being in overlapped relation.

14. A film for use in reproducing pictures and sound in synchronism having thereon a plurality of superimposed photographic records, each adapted to intercept or affect a certain class of light rays and permit rays of another class to pass unimpeded therethrough, each record intercepting or affecting that class of light rays which is permitted by the other record to pass freely, the records being in overlapped relation.

Cl. 13

A film for coincidentally reproducing moving pictures and sound, said film having conjoined thereon a sound record and a consecutive series of pictures.

-33-

The combination with means for projecting a plurality of different classes of light rays, of a film movable in the path of said light rays, said film having thereon a plurality of records, each of said records affecting or being more or less opaque to the passage of a certain class of light rays but permitting the free passage of another class of light rays, the rays permitted to pass by one record being of another set from those rays permitted to pass by any other record.

-34-

Means for reproducing sound in connection with moving pictures including a film having thereon a consecutive series of moving picture photographs and a consecutive series of sound reflexes constituting a record, the sound reflexes corresponding to any particular event displayed on any one picture being longitudinally spaced on said film from said correlated picture, means for intermittently moving one portion of the film, means for steadily moving another portion of the film, means for projecting the said pictures at the intermittently moving portion of the film, and means operatively affected by the sound record and located at the steadily moving portion of the film, the distance between the picture projecting and the sound reproducing devices being equal to the distance between any one picture and the correlated corresponding portion of the sound record.

Means for reproducing sound in connection with moving pictures including a source of white light, a source of rays beyond the visible spectrum, a film having a consecutive series of picture records and a correlated sound record, the picture record being transparent to invisible rays but affecting visible rays, the sound record unaffecting the visible rays but affecting the passage of invisible rays, the sound record correlated with any specific event on any one picture of the series being longitudinally spaced therefrom along the film, means for passing said film in the paths of the visible and invisible rays, and means acted upon by the invisible rays passing through the film for translating the variations in intensity of said invisible rays into sound vibrations.

In Testimony Whereof I affix my signature in presence of two witnesses.

(Sign here First name in Full.) Richard M Craig

Witnesses:

(Two witnesses sign here.) G. M. Book.

D. H. Shaver

OATH.

State of Texas, } ss:
County of Bexar.

I, Richard M. Craig,

, the above-named petitioner being sworn, depose and say that I am a citizen of the United States and resident of San Antonio, in the County of Bexar, and State of Texas, that I verily believe myself to be the original, first, and sole inventor of the improvements in Phonographic Attachment for Moving Picture Machines,

described and claimed in the annexed specification; that I do not know and do not believe that the same was ever known or used before my invention or discovery thereof, or patented or described in any printed publication in any country before my invention or discovery thereof, or more than two years prior to this application, or in public use or on sale in the United States for more than two years prior to this application; that said invention has not been patented in any country foreign to the United States on an application filed by me or my legal representatives or assigns more than twelve months prior to this application; and that no application for patent on said improvements has been filed by me or my representatives or assigns in any country foreign to the United States, ~~except as follows: (1)~~

(Sign here First name in Full.) Richard M Craig

Sworn to and subscribed before me this 13 day of [illegible] 191[illegible]

D. B. Craig
Official Signature

Notary Public Bexar County Tex
Official Character

NOTE: [illegible] be made before [illegible] who must affix his seal. [illegible] Certificate of [illegible] of such officer.

Div. 7 Room 312

Address only "The Commissioner of Patents, Washington, D. C."

M. Paper No. 2

All communications respecting this application should give the serial number, date of filing, and title of invention.

DEPARTMENT OF THE INTERIOR

UNITED STATES PATENT OFFICE

WASHINGTON June 27, 1913.

JUN 27 1913

R. S. & A. B. Lacey,

Washington, D. C.

Please find below a communication from the EXAMINER in charge of the application of

Richard M. Craig, filed May 6, 1913, Phonographic Attachment for Moving Picture Machines, Serial #765,959.

E. B. Allsop

Commissioner of Patents.

Page 3, line 25, "film" should perhaps be sound record.

Page 4, lines 27 to 31, the correctness of the statement is doubted.

page 5, line 12, "will require" should be will be required; line 16, "at the same time" seems superfluous.

The brief description of Figure 11 should be supplied.

Page 12, line 1, "perpendicular" is not understood.

Page 14, line 15, "affects" should be affect.

Page 17, lines 19 to 22, are not understood.

45 is not found on the drawing. (Page 22, line 1). Page 22, line 4, "causes" should be cause.

Line z is not found on the drawing. (Page 24, line 9).

The use of reflectors referred to at the foot of page 24, is not understood.

Page 25, line 5, "further" should be farther.

Page 27, line 2, "further from" should perhaps be nearer to.

As understood, the film as shown in Fig. 7a has a picture record on one side, each record being more or less opaque in different parts because of the different degrees of deposit on the film. The areas of heaviest deposit on one side of the

film would seem in places to overlie the clearest portions of the other face of the film; and with such an arrangement, the deposit areas on the one side would hinder the passage of the light through the clearer portions of the other side of the film. It is not understood how deposits of such different natures are produced on the two sides of the film as to determine of themselves which rays can be transmitted by the respective deposits. As far as can be understood, the deposits are of the same nature, it not being understood how they are made different by the particular substances that applicant combines with the emulsions on the respectives faces of the film. Further explanation is therefore asked for on the above points.

Division is required between claims 1 to 8, 9, 11, 12, 13, 25, 30, 31, and 32, for the film; claims 10, 16 to 21, 26 to 29, 33 to 35 for the reproducing apparatus; claims 14 and 15 for the method of making the records; claim 22 to claim 24 for the taking apparatus. These are regarded as separate inventions and constitute subject matter for separate applications.

It is not clear whether claim 10 is intended to cover the film or the reproducing apparatus. This claim should include the light source if the apparatus is to be covered.

In claim 11, it is not clear whether the description applies to one and the same substance or to alternate substances. Likewise claim 12.

A cursory search shows the patent to :

Haines et al., (British), #18,057, of 1906;
(88--Sum. Dig.)

J. R. M.

W. B. Underwood

Examiner.

Amendment A Pat 3

JUN 1914

W-MCS. June 3, 1914. #5086-T

IN THE UNITED STATES PATENT OFFICE.

Richard M. Craig, Serial No. 765,959,

Moving Picture Machines,

Filed May 6, 1913.

U. S. Patent Office. Room No. 312.
JUN 5 1914
DIVISION VII.

Hon. Commissioner of Patents,

S I R:-

In response to Official action dated June 27, 1913, amendment is hereby made as follows:-

Page 3, line 25, change "film" to sound record

A Page 4, cancel from and including the word "In" on line 27 of page 4 to and including line 4 on page 5.

Page 5, line 12, before "require" insert be and same line cancel "to be made"

Line 16, cancel "at the same instant"

A1 Page 8, last line insert Fig. 11 is a diagrammatic view of another form of sound reproducing mechanism.

Page 12, lines 1 and 2 cancel "perpendicular"

Page 14, line 15, change "affects" to affect

Page 17, line 14, cancel "on account that" and substitute means

Same page, line 20, change "larger" to wider

Page 22, line 4, change "causes" to cause

Page 24, line 9, and line 14, change "z" to Z

Same page, last line after "reflectors" and before the period insert for deflecting the invisible rays along the line Z.

A2

Page 25, line 5, change "further" to farther

Page 27, line 7, change "further from" to nearer to

Cancel claim 1.

Change the ordinal of claim 2 to 1; 3 to 2 and line 3 after "rays" insert without affecting said rays

Change the ordinals of claims 4, 5, 6 and 7 to 3, 4, 5 and 6

Line 4 of former claim 7, present 6, after "light" insert but not affecting invisible light rays

Change the ordinal of claim 8 to 7 and 9 to 8

Cancel claim 10 and change the ordinal of claim 11 to 9; 12 to 10.

Change the ordinals of claims 13, 14 and 15 to 11, 12 and 13.

Cancel claims 16 to 27 inclusive and substitute:

12. The method of producing a motion picture and sounds corresponding to the action of the pictures which consists in passing rays of visible light and invisible light rays separately through a film, one side of said film being provided with photographic picture records acting to affect rays of visible light but not affecting invisible light rays, the other side of said film having superimposed thereon a photographic sound record of a substance which will affect invisible light rays but will not affect the visible light rays, causing the film to move at one p int intermittently and at another point continuously, causing the rays of visible light to pass through the intermittently moving portion of the film and the invisible rays to pass through the steadily moving portion of the film,

A3

and translating the variations in the invisible light rays into sound vibrations.

Change the ordinal of claim 28 to 15.

Cancel claim 29.

Change the ordinals of claims 30 and 31 to 16 and 17

Line 1 of present claim 16 cancel "speech" and substitute sound

Line 1 of present claim 17 cancel "speech" and substitute sound

Cancel claims 32, 33, 34 and 35 and substitute:

The method of reproducing a plurality of different records from a single moving film, consisting in moving a film across the paths of a plurality of different classes of light rays, said film having thereon a plurality of superposed records, each of said records affecting or being more or less opaque to the passage of a certain class of light rays but permitting the free passage of another class of light rays, the rays permitted to pass by one record being of another set or class from those permitted to pass by any other record.

REMARKS

With regard to lines 19 to 22 of page 17 the sound record will consist of transverse lines spaced apart a certain distance from each other and of greater or less intensity, depending upon the sound recorded. The width of the lines will depend upon the rapidity with which the record moves, and where the operating speed of the film is necessarily great in order to properly reproduce the pictures, these lines must be relatively wider than they would

be where the operating speed was lower.

The objection of the Examiner contained in the last four lines on page 1 of the Office action and the first twelve lines of page 2, is not understood, and it is believed that the Examiner mis-understands applicant's invention. The Examiner states that "the film as shown in Fig. 7B has a picture record one one side, a sound record on the other, each record being more or less opaque in different parts....." The Examiner is asked to note that these records are more or less opaque only to the particular species of rays which they affect,--thus the record on one side is entirely transparent with regard to ordinary rays of light but is only more or less opaque with relation to the infra-red rays, while the photographic picture record is more or less opaque to ordinary light rays but is entirely transparent to the infra-red rays. Thus the areas of heaviest deposit on one side although they overlie the clearest portions of the other face of the film do not affect the passage of light therethrough. The Examiner states that "The areas of heaviest deposit on one side etc." The Examiner will conceive applicant's invention better if he does not regard this as an opaque deposit but will assume that there is upon one face of the film an apparently perfectly transparent medium which, however, contains in it an apparently perfectly transparent chemical which will not affect and freely permits the passage of visible rays but which will affect the passage of invisible rays. This is analogous to the action of bodies interfering with the passage of the X-ray. Certain material is absolutely opaque to the passage of white light but it is practically transparent to the passage of X-rays, while on the other

hand material which is transparent to the passage of X-rays is opaque to the passage of rays of ordinary light.

If the Examiner does not believe that there is any material which can be used photographically and which will permit the passage of rays of ordinary light but will be more or less opaque to the action of the infra-red rays, applicant will be glad to furnish authority for his statements.

The claims now left in this case cover the film, but with the claims upon the film, applicant has also included claims upon the method of making the film and claims upon the method of using the film. Where a method and the article are so closely allied that the article cannot be produced by any other method nor can the method be used except to produce that article, the Office has always allowed the claims to remain in the same case, and that is exactly the state of affairs in this case. The film cannot produce the picture by itself. The operation cannot be produced with any other film and the film cannot be reproduced except by the use of invisible rays and ordinary light rays.

It is believed that these three sets of claims should remain in one case and that this is contemplating the Rule 41 of the Rules of Practice.

Attention is called to the following decisions:

Cowper-Coles, 1 C. C. 681, 1902, where it is held that division should not be required between claims to a process for depositing zinc on metallic surfaces, and claims to the article produced, where there is doubt as to the possibility of producing the article by any other process and the process will not produce any other article.

Adams, 106, O.G. 541, held that division should not be required where the process necessarily results

in the article although "it is probable that the composition (article) might be produced by other processes".

Again, in Dallas, 106, O. G. 996, it was held that where the process set forth in some claims necessarily produced the product set forth in others, and there is a close relationship betweem them, although it is possible that the product might be made by other processes, the claims may be retained in one application.

In Leavitt, 13 Gour., 36-12, June 1901, it was held that an applicant presenting process claims in the same application with product claims and some of the process claims were so broad that it was not apparent that the product could be made with any other process, or that the process could result in any other, while others were narrower and divisible from the product claims, held that the merits of the broad process claims and of the article claims should be considered in the same application and that if the state of the art did not warrant the allowance of such broad claims the product claims should be divided from the remaining process claims and prosecuted separately.

In Ives, 15 Gour. 23-24, March, 1913, it was held that division was not required between claims for a photograph and claims for the process of making the photograph, both being new. This is certainly on all fours with the present case.

With regard to the English reference cited, while this shows a film having a photographic sound record and a photographic picture record, yet this film does not meet the terms of applicant's claims for the reason that the sound record is disposed at one side of the film and does not overlie the picture record and further, that in Haines there is no suggestion of the sound record being worked by infra-red rays.

Reconsideration is asked.

Respectfully submitted,

R. S. & A. B. Facey

Attys. for Craig.

1050

7 Room 312

Address only
"The Commissioner of Patents,
Washington, D. C.,"
and not any official by name.

9-230

M. Paper No. 4

All communications respecting this application should give the serial number, date of filing, title of invention, and name of the applicant.

DEPARTMENT OF THE INTERIOR

UNITED STATES PATENT OFFICE

WASHINGTON July 21, 1914.

U. S. PATENT OFFICE
JUL 21 1914
MAILED

R. S. & A. B. Lacey,

Washington, D. C.

Please find below a communication from the EXAMINER in charge of the application of

R. M. Craig, filed May 6, 1913, Phonographic Attachment for Moving Picture Machines, Serial #765,959.

Thomas Ewing
Commissioner of Patents.

Case reconsidered as amended June 4, 1914.

Page 5, line 12, "require" should be required.

Reference numeral "45" is still not found on the drawing.

The misjoinder of invention has not been relieved, as claim 15 relates to apparatus while other claims before mentioned cover the film. All the claims must be directed towards the same invention before action on the merits may be had. As far as can be now understood the combined record would seem to be capable of being made by other methods than that outlined by applicant in claims 12 - 13 and should not be treated in the same application with the article claims. The requirement for division between these method claims and the article claims is therefore repeated. It is possible however that the examiner's position might be changed on this point upon the examination of applicant's authorities below requested. Claims 14 and 18 are thought not to state a proper method, but merely the obvious and necessary operation of the film. These claims are accordingly rejected.

The examiner is not yet satisfied as to the ability of the substances mentioned by applicant to act in the manner claimed;

If however these claims should be interpreted so broadly as not to necessarily include pictures and sound records, then they must be regarded as being for a broader and different invention than that included in the synchronization of pictures and sounds, and would therefore be divisible therefrom.

Authority is also asked for as to the use of rock salt and fluorite for the purpose stated by applicant. In this connection attention is called to the following publications, copies of which are to be found in the U.S.Patent Office Scientific Library:

"Experimental Physics" by Weinhard page 811."
"Light, Visible and Invisible" by Silvanus P.Thompson pages 165-166 and pages 198-199".

Applicant should make it very clear just what is the composition of the emulsion used for the sound record, and this proposition as well as that concerning the structure of the condensing lenses must be supported by particular authority.

L. T. Underwood

Examiner, Div. 7.

FGS-GS December 8, 1914. 5086-T

IN THE UNITED STATES PATENT OFFICE.

Richard M. Craig, Serial No. 765,959.

Phonographic Attachments for Moving Picture Machines,

Filed May 6, 1913, Room No. 312.

U. S. Patent Office
DEC 10 1914
DIVISION VII.

Hon. Commissioner of Patents,

S I R:

Responsive to Official action of July 21, 1914, amendment is hereby made as follows:

Page 3, line 14, correct the spelling of "synchronism"

Page 5, line 12, erase "require" and insert: required

Page 7, line 1, after "impervious" insert: to

Page 9, line 11, erase "without being visible and" Same page, line 13, erase "picture" and insert: film Line 14, erase "strip" Line 17, erase "the" (first occurrance) Line 23, after "which" insert: latter Line 24, erase "which" Line 25, erase "record"

Page 10, line 5, after "rays" insert: and more or less completely intercept the visible rays Line 12, erase "white" and insert: visible Line 14, erase "impervious" and insert: pervious Line 28, erase "ordinary" and insert: visible Last line, correct the spelling of cut

Page 11, line 6, pluralize "ray" Line 9, after "acting" insert: as Line 19, before "substance" insert: a Line 23, erase "said" Line 27, erase "illustrated" and insert: illustrates

Page 12, line 30, erase "a" and insert: the

Page 13, line 1, erase "small" Line 7, after "film" insert: 12 Same line, erase "its ordinary" Line 9,

erase "12"

Page 14, line 11, erase "When" and insert: While Line 14, erase "sounds" and insert: sound waves Line 17, erase "caused thereby" Line 18, before "flame" insert: intensity of the Same line, erase "thus" and insert: consequently Line 19, erase "into" and insert: through Line 20, erase "formed" and insert: made Line 22, before "of" insert: in intensity Line 23, after "shows" insert: in the developed negative film Line 24, erase "stripe" and insert: striations Line 29, erase "of" and insert: in Same line, erase "corresponding" Same line, after "sound" insert: vibrations of which they are a record Erase the sentence beginning in this line.

Page 15, line 7, erase "back"

Page 16, line 13, before "leave" insert: therefore Line 15, after "lines" insert: of vertical striations Line 26, erase "bands or stretches" Line 27, erase "again"

Page 17, line 14, erase the word "means" inserted by amendment and insert: because

Page 18, line 7, erase "and unintermittent"

Page 21, line 26, before "records" insert: sound

Page 22, line 1, erase "45" Erase the sentence beginning in line 8.

Page 24, erase the sentence beginning in line 22.

Page 25, line 7, pluralize "voice" Line 8, erase "to" and insert: with Same line, pluralize "position" Same page, erase the paragraph beginning in line 20 and ending on page 26.

Page 26, line 13, after "couples" insert: 52

Cancel claim 15 and renumber the remaining claims as 1 to 17 inclusive.

Enter the following claims:

16. A composite picture and sound recording film having on one side thereof a photographic record and on the other side a photographic record, the records being overlapped.

17. A composite picture and sound recording film having opposed photographic and transparent photographic records.

18. A composite picture and sound recording film having opposed surfaces sensitized for the individual impression thereon of photographic and photographic records.

19. A negative film for the negative impression of picture and sound records having its opposed surfaces sensitized one for the photographic impression of a picture and the other sensitized for the photographic impression of a related sound, the sensitized medium of the last-mentioned surface of the film being pervious to visible light rays.

20. A positive film for the reproduction of picture and sound records having upon one surface a positive picture record pervious to ~~visible and~~ invisible light rays and provided upon its other surface and directly opposite the picture record with a positive sound record pervious to visible light rays and more or less impervious to invisible light rays.

(Copy)

R E M A R K S:

The Examiner has requested a citation of the applicant's authority upon which are based certain state-

ments made in the specification. In response to a request for such a statement from the applicant, attorneys are in receipt of a letter which it is believed contains the desired information. The applicant states in substance in his said letter that the ordinary moving picture film permits infra-red rays to pass freely as, of course, also the visible light rays, the latter in degree according to the intensity of the impression upon the film. He states that in devising his invention, the problem arose to provide some material which would intercept to a greater or less degree the infra-red rays and which would yet be transparent so as not to interfere with the visible light rays, and which material or substance could be applied to that face of the film directly opposite the face containing the photographic impression. He found that metallic silver could be rendered so thin as to be pervious to visible light rays and yet it would intercept the infra-red rays. The photographone is an instrument well known and by its use sounds may be recorded on a film by means of visible light rays, the film being of course sensitized and the impression of the sound waves being translated thereto by the variation in the intensity of the light. However, the photographonic film record employed in connection with this instrument is in the nature of a negative and is of course, when developed, more or less impervious to visible light rays. Consequently, such a record could not be made upon the obverse side of a moving picture film, as to do so would interfere with the projection of the photographic picture record. In the film mentioned, the sound waves are recorded through the medium of visible light rays. The applicant therefore perceived the necessity of producing a record which could be reproduced through the medium of

invisible or infra-red rays, and which record would not interfere with the passage of visible light rays, so that the sound record could be produced upon one face of the moving picture film and the picture record upon the other face, each record occupying the entire width of the film and the necessity of providing a film of greater width than the standard film being therefore obviated. The applicant makes mention of a few of the works which he has read upon the subject in general and a list of these works is given below: -

The Construction of A Sensitive Galvanometer for Spectro Bolometric Purposes, by C. G. Abbott.

The absorption of Water Vapor in the infra-Red Solar Spectrum, by F. E. Fowle.

Radiometric Investigation of Water of Crystallization, Light Filters and Standard Absorption Bands, by W. W. Coblentz.

Radiometric Investigations of Infra-red Absorption and Reflection Spectra, by W. W. Coblentz.

Instruments and Methods Used in Radiometry, by W. W. Coblentz.

Selective Radiation from Various Substances, by W. W. Coblentz,

Selective Radiation from Various Solids, by W. W. Coblentz.

Solar-Radiation Researches by Jules Cesar Janssen, by A. de la Baume Pluvinel,

The discrepancy between the Solar Radiation Measures by the Actinometer and by the Spectre Bolometer, by F. E. Fowle.

The Reflecting Power of Various Metals, by W. W. Coblents.

The Wireless Telephone, by Ernest J. Ruhmer

The Photophone, by A. Graham Bell.

Production of Sound by Radiant Energy, by A. Graham Bell.

Selenium Properties and Applications, by W. J. Hammer.

The New Spectrum, by S. P. Langley.

It is thought that if the Examiner will consult these authorities he will appreciate the feasibility of the applicant's invention. It is also believed that, in the light of the above mentioned authorities, the Examiner will appreciate the fact that the film disclosed by the applicant could not possible be produced in any manner other than by the method stated in his specification. This being the case, the decisions noted in the amendment of June 4th, 1914, are in point, and the requirement for division should be withdrawn. The Examiner will note that claim 15 has been canceled in view of the objection raised against the same.

As concerns claims 14 and 17 (the latter was formerly claim 18 presented by the amendment mentioned), attorneys would state that it does not appear to them that these claims state merely the obvious and necessary operation of the film. They disclose a novel method of reproducing in synchronism a sound and a picture record. While the claims in question may make mention of the movement of the film and the reproduction of the two records, it is believed that they, as a matter of fact, truly discribe a novel method for producing simultaneously and in synchronism motion pictures and related sounds.

Attorneys take this opportunity to briefly discuss

the patents cited by the Examiner in the above noted Official action. The patent to Dupuis discloses no more than a bare idea. There is nothing in the specification of this patent to show that the patentee had in mind any definite means for accomplishing the results which he briefly describes therein, and, in fact, it appears that his idea was to have upon one face of a moving picture film a photographic record, which, of course, in order to depict the images, would be more or less opaque, and to produce upon the other face of the film a sound record. So far as there is anything in the record to show to the contrary, the applicant is the first one to have ever conceived the idea of a transparent photographic record. It is to be presumed therefore that the only means of producing a phtographonic record at the command of the patentee was that well known in the preparation of the film for the photographone, in which event, the transversely extending series of striations upon the obverse side of the film would materially interfere with or entirely prevent the projection of the photographic record. In fact, the patentee in question states in the claim of his patent that his invention consists in an opaque moving picture film having a continuous movement at uniform speed, the film being characterized in that its face is arranged to receive images for the moving picture projection, and its obverse face is arranged to receive a graphonic record, the film being arranged to permit reproduction simultaneously and in synchronism of the sounds and images. It seems clear from the statements made by the patentee that unless the two records were relatively laterally displaced, the projection of the photographic record would be interfered with, if not

entirely prevented. It may be that the patentee had in mind the production of a sound record by some other means than through the medium of variations in the intensity of a light to which the film was subjected. As before stated, however, he discloses no means for carrying out his invention and therefore attorneys contend that the patent in question is void as a reference.

In the French patent to MacCarty, there is shown a film of greater than the standard width and divided longitudinally medially, the film at one side of its middle containing a picture record and at the other side containing a sound record. Not only is the film in the MacCarty patent produced in an entirely different manner (so far as concerns the sound record) from that by which the applicant's film is produced, but the sound record is more or less opaque, and it is for this reason that MacCarty found it necessary to locate the same laterally to one side of the picture record. From the foregoing, it is obvious that the French patent to DuPuis is not such a disclosure as would render it a valid reference and that the patent to MacCarty does not show the same idea of invention as disclosed by the applicant.

It is thought that the application is in condition for full and favorable action on the merits.

Respectfully submitted,

W. A. & W. B. Facey

Attys. for Rachard M. Craig.

Div. 7. Room 312 MI-PSC

Address only "The Commissioner of Patents, Washington, D. C." and not any official by name.

Paper No. 6.

All communications respecting this application should give the serial number, date of filing, title of invention, and name of the applicant.

DEPARTMENT OF THE INTERIOR

UNITED STATES PATENT OFFICE

WASHINGTON December 21, 1914.

R.S. & A.B.Lacey,

Washington, D.C.

U.S. PATENT OFFICE DEC 21 1914 MAILED

Please find below a communication from the EXAMINER in charge of the application of

R.M.Craig, for Phonographic Attachment for Moving Picture Machine filed May 6, 1913, Serial No. 765,959.

Thomas Ewing
Commissioner of Patents.

In response to amendment filed Dec 9, 1914.

On page 16, line 15, the word "striations" is not clear in this connection.

Attention is again called to reference numeral "45".

In reply to the Examiner's request for citation of authority applicant has furnished a list of fifteen works, but does not point out exactly where in these several publications the information is to be found. Thus applicant will be required to be more specific in pointing to his authority, so that it can be readily found by the Examiner.

Upon further review of the claims, it is found that claims 8 and 10 are apparently directed to cover the sensitive film which is regarded as a separate and independent invention from the film carrying the records and is properly examinable in another division of this office. New claims 20 and 21 belong to the same class, and these four claims are divisible from the other film claims and method claims before pointed out. New claims 18,19 and 22 are classed with the film record claims as grouped in the last requirement of division. With these modifications and additions, the requirement of division is repeated. Claims 16 and 17 are regarded as relating to the synchronization of pictures and sound, and they should be made [illegible] a reference to this combination.

that is, those substances used to produce the sound record on the positive film. Applicant is accordingly called upon to refer the examiner to his authority in this matter, especially in reference to the substances mentioned in paragraph 1, page 10, and also as to the statement on page 11, lines 2 - 3. In connection with the use of one of the substances named by applicant on page 10, namely thin metallic silver, attention is called to the article by Prof. R. W. Wood, entitled "Photography by Invisible Light", on page 380 of the Scientific American Nov. 15, 19[illegible] in which thin metallic silver is mentioned as being used as an ultra-violet screen.

In claim 13, line 5, "visible" should be canceled.

In claim 15, line 1, "recording" should be record.

The following patents are added:

McCarty, (French), #448,757, Dec. 5, 1912; (1 sheet);
Dupuis, (French), #372,785, March 1, 1907; (no drawings);
(88--16.2).

JTGM.

L. D. Underwood

Examiner.

Amendment A Paper No. 7

S/MOD Dec. 11, 1915. 5086-T

IN THE UNITED STATES PATENT OFFICE.

Richard W. Craig, Serial No. 765,959.

Phonographic Attachments for Moving Picture Machines,

Filed May 6, 1913, Room No. 318.

U. S. Patent Office
DEC 16 1915
DIVISION VII

Hon. Commissioner of Patents,

S I R:

In response to official action of December 21, 1914, amendment is hereby made as follows:-

Page 2, erase the sentence beginning in line 6.

Page 11, lines 28 and 29, erase "illustrated" and insert --illustrates--

Page 16, line 15, erase the matter inserted after the word "lines"

Page 19, line 5, erase "shifted" and insert --moved--

Page 21, line 25, erase "transmitting" and insert --translating--; Page 22, line 1, erase "45"

Claim 15, line 1, before "sound" insert --pictures and--; and in the same line after "sound" insert --in synchronism--

Make the same correction in line 1 of claim 16.

R E M A R K S:

Upon further correspondence with applicant it is found that the authorities noted in the last amendment were consulted in their entirety, that is to say applicant read and gave due consideration to the entire text of each book mentioned and his present invention is the result of such consideration of the said authorities. Applicant also states,

11353

concerning the use of rock salt and flourite, that he has considered in this connection the following authorities:

Dispersion of Rock Salt & Flourite in the Infra-red Spectrum. Report of Astrophysical Observatory, 1891-1901, Vo. 4222, Chapter 1, Page 219.

Comparison of Dispersion of Prisms (rock salt, flourite) Page 246. Selective Radiation from Various Substances 111, by W. W. Coblentz, Reprint, No. 156, Bureau of Standards.

Rock Salt, Page 690 the New Spectrum, by S. P. Langley, Smithsonian Institute Report (1301)

Flourite, Page 628, Radiometric Investigations W. W. Coblentz Reprint No. 168, Bureau of Standards.

Rock Salt, (infra red rays) Page 194 Light Visible & Invisible, by Silvanus P. Thompson, Published by McMillan & Co., London.

Flourite & Rock Salt (infra red work) Page 56. "The Sun", by Chas. G. Abbott, Published by D. Appleton & Co., New York.

Rock Salt Lenses & Prisms are supplied by such concerns as:

Adam Hilger, Ltd. 75a Camden Road, London, N. W.

Ferdinand Ernecke, Koniggratzerstrasse 112, Berlin, S. W.

Bernhard Hallenachf, Optical Works, Berlin.

Authority for the use of Silver, etc. page 472, Reprint No. 45.

He further states that the emulsion employed for the sound record is composed of gelatine with which is mixed the medium for cutting off the infra red rays, which medium may be very finely divided metallic silver, speculum metal, or any other suitable material designed to intercept such rays. He sensitizes the gelatine coating by means of a solution of bichromate of potassium or a solution of bichromate of ammonium, and the film is treated in the same manner as by the well known raised gelatine process.

It appears to attorneys that applicant has furnished full evidence of the practicability of his invention and they fail to see how he can give a more definite citation of authorities than that contained in this paper and in the last filed amendment. In any event it is quite certain that applicant has made earnest effort to comply with the Examiner's requirement for citation of authorities and if after considering the authorities cited the Examiner still doubts the practicability of the invention his doubts should be resolved in favor of the applicant.

As concerns the requirement for division it may be stated that under the Ruling in Ex Parte King 190 O. G. 548 applicant elects to prosecute in this case claims 1 to 7, inclusive, claim 9, claims 11 to 13, inclusive, and claim 22 and it is therefore requested that action on the merits be given these claims. In his official letter of July 21, 1911 the Examiner stated concerning the requirement for division therein made that his position might be changed upon examination of the authorities requested and apparently therefore it is not incumbrant upon applicant to at this time respond to a requirement for division between the claims which he has above elected to prosecute in the application. In this connection it may be stated, however, that attorneys fail to see how the applicant's negative films could be produced except, and particularly as concerns the sound record, by the recording photographically of the visible light rays variations upon the sensitized film. All of the instruments described by client in his specification are well known and consideration of practically any advanced works on physics will show that it is possible to photographically record sound rays by the variations in intensity of light rays. As the sound record described by applicant could not be produced by any other method it is evident that all of the claims elected to be prosecuted in this case should receive action on the merits.

Respectfully submitted,

Attys. for Craig.

Div. 7 Room. 312
Address only
The Commissioner of Patents,
Washington, D. C.,
and not any official by name.

2-260

M. Paper No. 8
All communications respecting this application should give the serial number, date of filing, title of invention, and name of the applicant.

DEPARTMENT OF THE INTERIOR
UNITED STATES PATENT OFFICE
WASHINGTON

Feb. 17, 1916.

R. S. & A. B. Lacey,
Washington, D. C.

FEB 17 1916

Please find below a communication from the EXAMINER in charge of the application of

R. M. Craig, filed May 6, 1913, Photographic Attachment for Moving Picture Machines, Serial No. 765,959.

Thomas Ewing
Commissioner of Patents

Case reconsidered as amended Dec. 17, 1915.

In response to the examiner's request for more definite authority, applicant has not rendered any assistance whatever, as far as the first group of publications is concerned, in searching out those particular passages upon which he might rely. Of the last group of works cited, that by Thompson is the only one available to the examiner; but the examiner fails to find substantiation for applicant's theory in that part of Thompson referred to. This book was also cited in the last office letter. Applicant will be required to provide the Examiner with transcripts of those parts of the works cited by him, or at least some of them, upon which he specifically relies for his authority on the several points raised by the examiner; and in the meantime the examiner will endeavor to obtain copies of these publications.

The examiner still fails to see how applicant's device can be made to operate successfully, but on the other hand is of the opinion that it will not work, for reasons stated in previous office letters. The claims are therefore rejected as

covering an inoperative device.

Upon reconsideration claims 8, 10, 20, and 21 may be treated with the claims for finished film. Likewise claims 12 and 13.

Claim 1 is also rejected on Haines, of record, there being no invention in placing the two records on opposite sides of the strip. It is observed that this claim does not state that the records are in overlapping relation.

Claims 2, 3, 5, 6, 8, 11, 15 and 16 are also rejected the same as claim 1, in view of the disclosure by Wood in Scientific American, of record.

Claims 12 and 13 are rejected on Haines and the Scientific American disclosure; the steps here recited not involving any invention but being a very obvious manner of procedure. The real invention in these claims is thought to reside in the finished film; the so-called "method" merely stating an obvious way of constructing applicant's combination film. These claims are therefore rejected on this ground also. Ex parte Trevetts 97 O. G. 1173.

The rejection of claims 14 and 17 is repeated.

Claim 17, in substance, is also rejected the same as claims 2, 3, &c., attention being called to the fact that the two records are not superposed. This is recognized as being the gist of applicant's invention, and unless this is brought out, there is no purpose in employing the particular forms of records.

Claim 18 is rejected the same as claim 1.

Claim 19 is indefinite in the word "opposed". This "opposed" arrangement would seem to require a particular form of deposit for each of the records; and this should be stated. Likewise claim 20.

In claim 21, line 3, "visible end" should be canceled.

JRW.

L. D. Underwood

Examiner.

U. S. Patent Office
FEB 3 1917
DIVISION VII

S/MOD Feb. 2, 1917. 5086-T

IN THE UNITED STATES PATENT OFFICE.

Richard W. Craig, Serial No. 765,959,

Phonographic Attachments for Moving Picture Machines,

Filed May 6, 1913, Room No. 312

Hon. Commissioner of Patents,

SIR:

In response to official action of Feb. 17, 1915, amendment is hereby made as follows:

Cancel claims 12 and 13 and renumber the remaining claims consecutively.

Claim 1, line 2, erase "pictures" and insert --picture records--

Last line, change the period to a comma and add --the records being in overlapped relation --

Make the same amendments to claims 2, 3 and 5.

Claim 6, last line, change the period to a comma and add --the records being in overlapped relation--

Claim 8, line 2, erase "substance" and insert --medium--

Change the period at the end of the claim to a comma and add --the mediums being in overlapped relation--

Claim 11, last line, change the period to a comma and add --the records being in overlapped relation--

In each of claims 13 and 14, change the period to a comma and add --the records being in overlapped relation--

Claim 15, line 5, after "of" (first occurrence) insert --superposed--

Claim 16, last line, change the period to a comma and

and --the records being overlapped--

Claim 17, line 2, after "and" insert --transparent--

Claim 17, line 3, erase "visible and"

In his present action the Examiner insists upon applicant furnishing extracts or transcripts from the authorities upon which he relies to support his theories. In effect, the Examiner is requiring the applicant to cite references to show that his invention is old. Applicant does not know of any published work which discloses his theory in its entirety. The applicant's invention is the result of the collateral reading of the authorities to which he has previously referred and of independent inventive reasoning on his part. The sensitiveness of a selenium cell to invisible light rays is well known; the fact that finely divided silver will intercept invisible light rays is also well known, and so with all of the other propositions advanced by applicant in setting forth the principles of his invention.

It is thought that claims 1, 2, 3, 5, 6, 9, 11, 13, 14, 15, 16 and also claim 19, as amended to set forth the overlapped relation of the sound and picture records, distinguish from the references cited against them.

A careful reconsideration of claims 12 and 15 is respectfully requested. These claims are thought to be proper claims and to set forth more than a mere obvious use of the film.

Claim 17 has been amended to set forth the fact that the photographonic record is transparent and is therefore not open to the objection noted. It is not thought necessary to define the character of the picture and sound records in claim 18 as this claim is drawn to the sensitized film and the coatings upon which these records are to be made need not in their initial condition be transparent any more so than an ordinary photographic film before exposure.

It is thought that the Examinershould waive his objection on the ground of imperativeness and should allow the claims as they now stand.

Respectfully submitted,

Atty. for Craig.

Letter to Office

U. S. Patent Office
FEB 19 1917
DIVISION VII

S/TDT eb. 16, 1917. 5086-T

IN THE UNITED STATES PATENT OFFICE.

Richard W. Craig, Ser. No. 765,959,

Phonographic Attachments for Moving Picture Machines,

Filed May 6, 1913, Room No. 312.

Hon. Commissioner of Patents,

S I R:

Supplemental to amendment of Feb. 2. 1917. Attorneys wish to quote below from a letter just received from applicant and request that this matter be carefully considered in connection with the said amendment.

"I am sorry the Examiner is skeptical. I am absolutely positive of my apparatus. I experimented for a good deal over a year and built a great many testing instruments and apparatus to arrive at my results and conclusions. It is not guess work on my part or a "wildcat" dream. Much of my data, which lead to my ultimate results was obtained first handed by personal correspondence with some of the leading scientists in the United States, each being an authority in his line. One was W. W. Coblents of the Bureau of Standards. Another was Chas. G. Abbott, of the Astrophysical Observatory, one of the most noted living authorities on Infra-red Rays. I might mention numbers of others. Though some of my apparatus was a bit crude, account of the crudeness of my facilities, the results were sufficiently satisfactory and convincing to myself to at once apply for a patent.

It seems as though the principle objection raised is the sound record will obstruct the passage of the visible rays through the picture record. The sound record will not obstruct the passage of the picture record, this I am absolutely positive of. It is put on with gelatine which is transparent and the silver is merely a trace and of such finely divided particles as to be thoroughly transparent. They are held in the gelatine medium (Besides silver there are a number of other things that can be used that are transparent of themselves, and which intercept the passage of infra red rays, but not so well as the silver and which is really transparent if used properly.) It must be remembered the Bolometer (reproducer) can under certain conditions be made so sensitive that it will register accurately heat down to the hundredth millionth part of a degree

(S. P. Langley's method), which is virtually a million times more sensitive than is necessary in my case, and although the silver is but a trace, it is sufficient to interrupt the passage of the infra-red rays to such an extent as to set up a very considerable disturbance in the bolometer and thus ultimately through the bolometer in the reproducing apparatus. (I might mention I used both a bolometer and a tasimeter in my test work). I might in a rough way use an example I am actually using now in the adv. device am developing now (I have one right here in the room now) which is a transparent mirror. It is set in the face of the machine and when the machine is dark on the inside it is a perfect mirror, but the instant the light is turned on inside the machine it is perfectly transparent and the advertisement and the colors etc immediately appear very distinctly right through the mirror. I merely mention this to show that even this silver is transparent and yet this coating is infinitely heavier than is necessary on my film. I might mention another patent already issued to Hoffman in which silver is used in an electric light globe to reflect back the infra-red rays which excludes the heat and at the same time uses the heat for intensifying the glow of the filament (Patent No. 1,043,008), and yet not cut off the white light. In one form of photography a slightly silvered lens is used for screening off certain rays. There are a number of varieties of glasses out on the market now for use in oxy-acetelene welding and the like in which glasses are worn by the workman for screening off the infra-red rays and some of which are entirely transparent and clear. I have made quite a little study of the subject of invisible lights, getting all the works obtainable on the subject, even getting some from England and Germany, have read papers etc before scientific societies etc. Though I make no pretenses of being an authority on the subject, still I feel I know my subject sufficiently well, and with the knowledge of the actual scientific principles involved, together with actual experimental work performed, to know whereof I speak. My conclusions are the results of numerous actual experiments. I probably used over 100 likely chemicals in looking for a medium suitable for my film, before I determined the gelatine-silver medium was one of the best. This was after every other detail was completed."

Respectfully submitted,

R. S. & A. W. Stacey

Attys. for Craig.

1071

[redacted]v. 7 Room 312
Address only
"The Commissioner of Patents,
Washington, D. C.,"
and not any official by name.

2-260

M. Paper No. 10
All communications respecting this application should give the serial number, date of filing, title of invention, and name of the applicant.

DEPARTMENT OF THE INTERIOR

UNITED STATES PATENT OFFICE

WASHINGTON April 18, 1917.

R. S. & A. B. Lacey,

Washington, D. C.

PATENT OFFICE
APR 18 1917
MAILED

Please find below a communication from the **EXAMINER** *in charge of the application of*

R. M. Craig, filed May 6, 1913, Phonographic Attachment for Moving Picture Machines, Serial No. 765,959.

Thomas Ewing
Commissioner of Patents.

Case reconsidered as amended Feb. 2, 1917, and in connection with communication of Feb. 17, 1917.

The examiner has carefully considered applicant's last argument, and has also availed himself of an opportunity to observe the effect of a thin metallic silver coating on visible light rays. As a result, the examiner feels satisfied that the sound record formed of such a deposit on one side of the film would make practically impossible the reproduction of the pictures on the other side of the film for the reason that too small a part of the visible rays would be transmitted by the sound record deposit. It was the observation of the examiner that only violet, and apparently only a part of these rays, could be seen through the metallic silver coating; and it is thought to be clear that a satisfactory reproduction of the picture r cord would be practically impossible with such a small part of the visible rays. Applicant's device must therefore be held to possess no practical utility; wherefore all the claims are rejected.

Attention is again called to the arguments advanced by the examiner in the previous office letters as to the deposits

on the two sides of the film and their effect upon the passage of light rays.

As far as can be learned by the examiner through further investigation, a selenium cell is, practically speaking, sensitive to only the visible light rays. In view of which fact the selenium cell in applicant's device would not respond to the infra-red rays to such an extent as is necessary in order to reproduce the sound record. For which reason the device is held to be inoperative, and all the claims are accordingly rejected.

The rejection of claim 18 on Haines et al., of record, is repeated.

Claims 19 and 20 are still held not to fully state the invention for the reason given in the last office letter, foot of page 2; whereforethese claims are rejected.

This application has been made special in accordance with Commissioner's Order No. 2210; and applicant's response to the above official action should be prompt and place the case in condition for final action by the examiner.

JEM.

L. D. Underwood

Examiner.

AUG 15 1917

S/MOD August 14, 1917. 5086-T ✓

IN THE UNITED STATES PATENT OFFICE.

Richard W. Craig, Serial No. 765,959,

Phonographic Attachments for Moving Picture Machines,

Filed May 6, 1915, Room No. 512.

U. S. Patent Office
AUG 16 1917

Hon. Commissioner of Patents,

S I R:

In response to official action of April 18, 1917,

At a recent interview had with the Examiner in the matter of the above-entitled case, authorities were submitted showing that the grounds for rejection stated in the official action of April 18, 1917 are untenable.

At the interview the conclusion was also reached that claim 18 was patentable over Haines, of record, as Haines does not show the picture and sound records upon "opposing surfaces" of the film. It was also agreed at the interview that claims 19 and 20 properly stated the invention.

It is respectfully requested that the case be passed to issue.

Respectfully submitted,

R. F. & C. W. Lacey

Attys. for Craig.

[Seventh Edition.]

No 18,057 A.D. 1906

Date of Application, 11th Aug., 1906.

Complete Specification Left, 11th Feb., 1907—Accepted, 10th Aug., 1907.

PROVISIONAL SPECIFICATION.

A New or Improved Method of and Means for Simultaneously Recording and Reproducing Movements and Sounds.

We, ROBERT THORN HAINES, Scientific Expert, of 26, Osnaburgh Street, Regents Park, London, JOHN ST. VINCENT PLETTS, Electrical Engineer, of "Ivanhoe", Clarence Road, Teddington, Middlesex, and EUGENE AUGUSTIN LAUSTE, Electrical Engineer, of 64, Strand, London, do hereby declare the nature of this invention to be as follows:—

This invention relates to a new or improved cinematographic and phonographic method or process and to means for recording and reproducing simultaneously the movements or motions of persons or objects and the sounds produced by them.

The object of the invention is to provide an effective method of, and means for, recording the simultaneous movements or motions of persons or objects and the sounds produced by them, so that the impressions of the movements will be recorded simultaneously with the impression of the sound waves, and will be reproduced simultaneously and in exact synchronism with them, and so that the sound waves will not suffer any variation or modification in the process of recording and reproducing, but when reproduced will be similar in every respect to the original sound waves and will therefore reproduce precisely the same sounds.

It is essential to the correct reproduction of the movements of the persons or objects in combination with the sound waves, that the simultaneous movements and sounds should be recorded and reproduced simultaneously in exact synchronism, and that the sound-waves which constitute the sounds should not suffer any variation, alteration, or modification, in the process of recording and reproducing, but should be recorded and reproduced alone and without the introduction or accompaniment of any other sound waves.

It is obvious therefore that no true record or reproduction of the sound waves could be made by any mechanical process or means in which a hard substance necessary to make the impression comes in contact with another hard substance, such for instance as the recording or reproducing pin of the phonograph or gramophone, because the friction caused between the two hard substances itself creates vibration or sound waves which accompany, vary, or modify, the sound waves which it is desired to record and reproduce, and are recorded and reproduced with the latter, proving detrimental to their true reproduction. The record therefore must be taken or produced without any contact between the medium caused to vibrate by the sound waves and the record or recording substance. It is further obvious that if the impressions of the movements and sounds were recorded separately on separate records or recording substance or material, the movements and sounds would be liable to vary in point of time and fail to synchronize with each other. In order to avoid this liability and ensure correct synchronism, the movements and sounds must be recorded simultaneously on the same record or recording substance or material.

The essential feature of our invention is an arrangement of means for obtaining as perfect a reproduction as possible of the movements of the persons or objects and the sounds simultaneously produced by them.

By our method as hereinafter more particularly described, we transmit the sound waves electrically from the place where the sounds originate to the place where we desire to have them recorded, and we record them photographically in varying degrees as to area, quantity, intensity, and corresponding effect of light and shade, proportioned to their period and amplitude, simultaneously with the recording photographically of the impressions or photographs of the successive movements of the objects, on separate parts, or in separate positions, of one or the same transparent medium or recording substance or material; and when such record is obtained we reproduce it by causing light to pass through that portion of the medium containing the record of the impressions, and so project them on the screen, and simultaneously cause light to pass through that portion of the medium containing the record of the sound-waves, to a cell of selenium or other suitable substance by which the varying degrees of light and shade of the record are converted into corresponding varying electric currents, which are so transmitted to the place where it is desired to reproduce them, and are there converted into vibrations by a suitable vibrating medium which reproduces the sound waves.

For the purpose of carrying out our invention we employ the following essential features in combination, suitable arranged relatively with each other.

1. A receiver or arrangement for collecting or receiving the sound waves to be transmitted.

2. A telephonic or microphonic transmitter to transmit the sound waves in electric circuit with a telephonic or microphonic receiver.

3. A telephonic or microphonic receiver to receive them.

4. A source of light, and a screen operated by the telephonic or microphonic diaphragm so as to vary its intensity or the intensity of the beam of rays emanating from it, or a mirror to alter or vary the direction of the rays of light.

5. A sensitised transparent medium or record for receiving the photographs or impressions of the movements and sounds.

6. A combination of mechanical parts for moving or translating such sensitised transparent medium or record to serve as a camera.

7. A source of light, and arrangement of mechanical parts for moving or translating such sensitised transparent medium or record, to serve as a projector.

8. A cell of selenium, or other suitable material, connected in proper electric circuit with a receiving or reproducing telephone or microphonic instrument, for transforming the light, varied by the varying light and shade of the record into corresponding electric currents, and transmitting them to such receiving or reproducing instrument.

9. A telephonic or microphonic receiving and reproducing instrument to receive the electric currents and convert them into vibrations and again into sound waves.

10. A horn, or spreader, or other arrangement for amplifying or increasing the loudness of the sounds.

There are various different forms and methods of using each of these essentials, which may be conveniently employed, and which we may prefer to substitute for and use in combination with any of the other essentials, and we do not therefore confine ourselves to the particular methods or parts described to be used in combination with any of the other essentials.

We will proceed to described the methods or process, and means for carrying it out, together with various alternative means which may be conveniently employed therewith.

The sound waves as well as the motions or movements of the objects which produce them are necessarily at a considerable distance where the record must be taken, and must also be reproduced at a considerable distance from the record; it is therefore essential to provide a means of receiving the sound waves

and transmitting them to a recording instrument, and a means of transmitting them from the recording instrument and reproducing them at a distant place.

For the purpose of collecting or receiving the sound waves we prefer to use a microphonic receiver such as is at present used for collecting the sound waves at concert or music halls for transmission, or we may use one or more horns or trumpets connected with any ordinary loud sounding telephone or microphone transmitter which receives the sound waves and transmits them to the receiving instrument, or we may prefer to use some other suitable means of collecting the sound waves for transmission.

Whatever form of transmission may be used we connect it in circuit with the receiving instrument, so that the sound waves may be converted into varying electric currents and transmitted from the transmitter to the receiver. These varying electric currents may be made to operate a diaphragm so as to reproduce the sound waves, or may be used to vary the strength of a magnet so as to vary and alter its attractive force.

We provide a suitable source of light or illuminant, and a means of varying its intensity or the intensity of the beam of rays emitted or emanating from it, so that the variations in its intensity or the intensity of the beam of rays, will be exactly proportioned to the variations in the sound waves transmitted by the corresponding electric current.

There are various means of varying the intensity of the source of light or the beam of rays of light, which may be conveniently employed.

We may prefer to use a lamp of great illuminating power having air supplied to it by a pipe which communicates with the diaphragm of the receiving instrument, so that when the diaphragm is caused to vibrate by the electric currents the amplitude and rapidity of the vibrations being proportioned to the sound waves the pulsations of air transmitted to the lamp cause proportional vibrations of the light. A reflector may be used for reflecting or directing the rays of light, and a lens or lenses for concentrating or condensing the light and bringing it to a focus.

We may prefer to vary the beam of rays emanating from the source of light by using a reflecting mirror which is caused to vibrate by the diaphragm or vibrating medium of the receiving instrument and reflects a varying beam of light through a lens or lenses into a dark chamber arranged in a camera; or instead of employing a reflecting surface two gratings may be employed one of which is arranged so as to be operated by the diaphragm or other vibrating medium of the receiving instrument, and so vary the beam of rays of light, allowing it to pass through a lens or lenses into the dark chamber or camera.

Or we may prefer to employ as a means of changing a beam of light or other radiant energy into vibrations corresponding to sound waves sensitive jets of air, gas, water, or other fluid, or we may prefer to use an oscillograph for the purpose, or any other known method of converting variations of current intensity into variations in light intensity, where the quantity or quality of the bundle or rays is controlled according to the variations of the current, may be used.

Whatever particular method or means may be employed by us for varying the light source or the rays of light emanating from it, we direct and control the light so that the variations and its intensity which correspond with the sound waves and the electric currents, will impress themselves photographically upon a sensitised transparent medium so that the impressions so made will proportionately correspond in some particular characteristic or form with the varying intensity of the light, the varying electric currents, and the varying sound waves.

For instance the impressions may be made in varying degrees of opacity and transparency, or light and shade, so as to correspond with the sound waves.

They may take the form of lines or dots of varying widths or sizes or varying distances apart.

1927

Or they may take the form of a varying spiral or varying wave lines, or of an opaque band varying in width so as to vary the proportion of transparency and opacity.

Or any other form which may be desired.

Within the dark chamber or camera a sensitive photographic film wide enough to receive the photographic impressions or movements of the objects and also the impressions of the sound waves, side by side, as arranged to be translated by any suitable mechanism, such as is usually employed for translating the films in an ordinary cinematographic camera.

This film is operated so that one part is translated continuously past a narrow slot or other suitably shaped opening in the chamber opposite the side where the sound waves are to be recorded, and the other part is translated intermittently past the lens as in an ordinary cinematograph camera.

By this means it will be seen that the record of the sound waves will not be exactly opposite the picture of the simultaneous movement, but at a short distance from it, although we may prefer to place the record of the movements and sounds in other positions relative to each other.

The sound waves which are electrically transmitted to the receiver cause corresponding variations in the source, or beam of rays, of the light, which is reflected or otherwise allowed to pass through a lens and through the slot or other shaped opening to the film.

The record of the sound waves thus made on the right or left hand side of the film, and the photographic impression of the motions or movements of the objects is photographed or taken simultaneously on the right or left hand side of it, side by side, so that the first of the sound wave impressions will commence at a convenient distance from the first of the impressions of the motions of movements so as to allow a loop to be made in the film in order that one part may be translated continuously and the other part intermittently.

The record thus taken of the sound waves consists of a continuous series of photographic impressions of light and shade, varying in degrees of transparency and opacity corresponding with the variations and the quantity or quality of intensity of the beam of rays of light reflected or allowed to reach the film, or it may consist of, or be made to take, such other form as may be desired.

Instead of using a strip of transparent sensitive film or medium for receiving the record, a sensitive circular plate of transparent material may be employed and caused to rotate by suitable mechanism and to move or change its position so that a fresh surface is presented to the light at each revolution, and the photographic impressions of the sound waves and motions or movements of the objects will be photographed in the desired positions in series on its surface.

Or the record may be made or photographed on an opaque plate having a polished surface and reflected from it, or reflected from it by a polished surface.

We may prefer to use a transparent cylinder or some other form of record.

For the purpose of reproducing the record thus produced we employ an instrument for translating the film similar in every respect to the former instrument described, but not enclosed in a dark box or chamber.

There are various bodies or substances whose electric conductivity is varied by the rays of light which fall upon them from the sun or other sources of light. Certain substances when exposed to light waves or radiations have the property of presenting a decreasing resistance to the passage of an electric current as the intensity of the radiation increases, and other substances have the property of presenting an increasing resistance to the passage of electricity as the intensity of the radiation increases. We may employ any of the substances, of either of these classes, for the purpose of converting the various degrees of light or shade, which correspond with the sound waves, into varying electric currents, and transmitting them for reproduction at the place required.

Means for Simultaneously Recording and Reproducing Movements and Sounds.

Any variation in the quantity or quality of the intensity of the radiant energy falling upon them alters their conductivity or resistance.

We prefer to use selenium prepared in a cell so as to become most sensitive to the light rays, or have its electrical resistance or conductivity altered or varied to the greatest extent by the light falling upon it.

This cell is arranged in circuit with a loud sounding microphone or telephone employing a suitable source of electric current, or it may be arranged in circuit with an electric lamp used in conjunction with a horn or trumpet for amplifying the sounds; or we may prefer to use a diaphragm which will vibrate and effect changes in a gas, oil, or other flame, connected with a horn or trumpet for amplifying the sounds, or we may employ any other suitable means of reproducing the electrical variations produced in the current through the selenium cell.

To reproduce the sound waves and impressions of the motions or movements of the objects, the film or record is placed in proper position in the reproducing instrument with a suitable source of light placed behind it so that the light will project the pictures on the screen and at the same time it or another light is placed so as to pass through the portion of the film containing the record or photographic impressions of the sound waves, and also through a lens if desired which may be interposed between the lens and the selenium cell for concentrating the rays which pass through the film and on to the selenium cell. When the film is translated at the proper speed the pictures will be projected upon the screen by the projecting lens of the instrument, and simultaneously the light passing through the film will be caused to vary in quantity, quality, or intensity, by the varying degrees of opacity and transparency or other forms or conditions of the photographic impressions on the film. Such variations in the quantity and quality of the intensity of light will correspondingly vary the electrical conductivity or resistance in the selenium and transmit the corresponding varying current which will produce corresponding vibrations or variations in the diaphragm or alterations in the flame or gas employed, so producing vibrations which produce the original sounds.

The sounds may be used to cause variations in light and in a cell of selenium or other substance used to transmit the sound waves in electric currents to the receiver.

Any of the means of varying the light source or rays emanating from it as described for the recording purpose, may also be used for varying the light for the purposes of transmission.

It is obvious that any suitable form of cinematograph mechanism may be used for translating the film, and that any desired arrangement of the pictures and record of the sound waves on the film or other medium may be used.

Instead of a microphone, where varying musical or other sounds have to be collected from a stage or the like and transmitted to the camera where they are used to affect the light in the manner described a number of conical or other chambers may be arranged in suitable positions having their outer open ends enclosed by india rubber or other suitable material tubes leading from the smaller ends of the different chambers converging to one larger tube which transmits the vibrations to the gas or other lamp which is affected by their vibrations in the manner required.

Dated this 10th day of August, 1906.

EDWARDS AND CO.,
Chartered Patent Agents,
Chancery Lane Station Chambers, London,
Agents for the Applicants.

COMPLETE SPECIFICATION.

A New or Improved Method of and Means for Simultaneously Recording Reproducing Movements and Sounds.

We, ROBERT THORN HAINES, Scientific Expert, of 26, Osnaburgh Street, Regents Park, London, JOHN ST. VINCENT PLETTS, Electrical Engineer, of "Ivanhoe", Clarence Road, Teddington, Middlesex, and EUGENE AUGUSTIN LAUSTE, Electrical Engineer, of 46, Strand, London, do hereby declare the nature of this invention and in what manner the same is to be performed, to be particularly described and ascertained in and by the following statement and accompanying drawings.

This invention relates to a new or improved cinematographic and phonographic method or process and to means for recording and reproducing simultaneously the movements or motions of persons or objects and the sound produced by them.

Hitherto it has been proposed to simultaneously record and reproduce animated scenes and sounds by means of combining photographic and phonographic apparatus, but without success owing to the difficulty of ensuring perfect synchronism, and the object of the invention is to provide an effective method of, and means for recording the simultaneous movements or motions of persons or objects and the sounds produced by them, so that the impressions of the movements will be recorded simultaneously with the impression of the sound waves, and will be reproduced simultaneously and in exact synchronism with them, and so that the sound waves will not suffer any variation or modification in the process of recording and reproducing, but when reproduced will be similar in every respect to the original sound waves and will therefore reproduce precisely the same sounds.

It is essential to the correct reproduction of the movements of the persons or objects in combination with the sound waves, that the simultaneous movements and sounds should be recorded and reproduced simultaneously in exact synchronism, and that the sound-waves which constitute the sounds should not suffer any variation, alteration, or modification, in the process of recording and reproducing, but should be recorded and reproduced alone and without the introduction or accompaniment of any other sound waves.

It is obvious therefore that no true record or reproduction of the sound waves could be made by any mechanical process or means in which a hard substance necessary to make the impression comes in contact with another hard substance, such for instance as the recording or reproducing pin of the phonograph or gramophone, because the friction caused between the two hard substances itself creates vibration or sound waves which accompany, vary, or modify the sound waves which it is desired to record and reproduce, and are recorded and reproduced with the latter, proving detrimental to their true reproduction. The record therefore must be taken or produced without any contact between the medium caused to vibrate by the sound waves and the record or recording substance. It is further obvious that if the impressions of the movements and sound were recorded separately on separate records or recording substance or material, the movements and sounds would be liable to vary in point of time and fail to synchronize with each other. In order to avoid this liability and ensure correct synchronism, the movements and sounds must be recorded simultaneously on the same record or recording substance or material.

The essential feature of our invention is an arrangement or means for obtain-

ing as perfect synchronous reproduction as possible of the movements of the persons or objects as well as the sounds simultaneously produced by them.

By our method as hereinafter more particularly described we transmit the sound waves electrically from the place where the sounds originate to the place where we desire to have them recorded, and we record them photographically in varying degrees as to area, quantity, intensity, and corresponding effect of light and shade proportioned to their period and amplitude, simultaneously with the recording photographically of the impressions or photographs of the successive movements of the objects, on separate parts, or in separate positions, of one or the same transparent medium or recording substance or material; and when such record is obtained we reproduce it by causing light to pass through that portion of the medium containing the record of the impressions, and so project them on the screen, and simultaneously cause light to pass through that portion of the medium containing the record of the sound-waves, to a cell of selenium or other suitable substance by which the varying degrees of light and shade of the record are converted into corresponding varying electric currents, which are so transmitted to the place where it is desired to reproduce them, and are there converted into vibrations by a suitable vibrating medium which reproduces the sound waves.

For the purpose of carrying out our invention we employ the following essential features in combination, suitably arranged relatively with each other.

1. A receiver or arrangement for collecting or receiving the sound waves to be transmitted

2. A telephonic or microphonic transmitter to transmit the sound waves in electric circuit with a suitable telephonic receiver.

3. A telephonic receiver to receive them.

4. A source of light and a screen operated by the telephonic diaphragm so as to vary its intensity or the intensity of the beam of rays emanating from it, or a mirror to alter or vary the direction of the rays of light.

5. A sensitised transparent medium or record for receiving the photographs or impressions of the movements and sounds.

6. A combination of mechanical parts for moving or translating such sensitised transparent medium or record, to serve as a camera.

7. A source of light, and arrangement of mechanical parts for moving or translating such sensitised transparent medium or record, to serve as a projector.

8. A cell of selenium or other suitable material connected in proper electric circuit with a receiving or reproducing telephone instrument, for transforming the light, varied by the varying light and shade of the record into corresponding electric currents, and transmitting them to such receiving or reproducing instrument.

9. A telephonic receiving and reproducing instrument to receive the electric currents and convert into vibrations and again into sound waves.

10. A horn, or spreader or other arrangement for amplifying or increasing the loudness of the sounds

There are various different forms and methods of using each of these essentials, which may be conveniently employed, and which we may prefer to substitute for and use in combination with any of the other essentials and we do not therefore confine ourselves to the particular methods or parts described to be used in combination with any of the other essentials.

We will proceed to describe the method or process and means for carrying it out, together with various alternative means which may be conveniently employed therewith.

The accompanying drawings are in illustration of our invention. Figure 1 being a sectional elevation shewing an arrangement of apparatus for collect-

ing or receiving the sound waves to be transmitted and a transmitter to transmit the sound waves in electric circuit with the receiver

Figures 2, 3, and 4, shew parts of the apparatus on a larger scale and hereinafter more particularly described.

Figure 5 is a part sectional elevation of the reproducing apparatus.

The sound waves as well as the motions or movements of the objects which produce them are necessarily at a considerable distance from where the record must be taken, and must also be reproduced at a considerable distance from the record; it is therefore essential to provide a means of receiving the sound waves and transmitting them to a recording instrument, and a means of transmitting them from the recording instrument and reproducing them at a distant place.

For the purpose of collecting or receiving the sound waves we prefer to use a microphonic transmitter such as at present used for collecting the sound waves at concert or music halls for transmission, or we may use one or more horns or trumpets *a* connected with any ordinary loud sounding telephone or microphone transmitter *b* which receives the sound waves and transmits them to the receiving instrument.

Whatever form of transmitter may be used we connect it in circuit (*c*, *d*) with the receiving instrument A.

In the drawings we have shewn a magnet B connected with the terminals K, K^1, the varying electric currents from the transmitter *b* operating a diaphragm C^1 having openings D^1 and arranged to more or less uncover openings D in a corresponding fixed diaphragm C. This arrangement is clearly shewn in Figures 3 and 4 in which B is the magnet, D^2 a spring contact carrying the movable diaphragm C^1 operated by the varying strength of the magnet by the varying currents through the terminals from the conducting wires B^1 B^2; F is a light guard through which the light from a light source *j* (Figure 1) is directed. *k* is a reflector contained in a dark chamber *l*. G is a glass or mica screen through which the light passes to the diaphragm. It will be seen that in exactly the same proportion of variation in the attractive force of the magnet due to the variation in the electric currents so the amount and intensity of the light permitted to pass through the vibrating diaphragm will vary. This diaphragm and its openings can be adjusted more or less by the screw E.

There are various means of varying the intensity of the source of light or the beam of rays of light, which may be conveniently employed.

We may prefer to use a lamp of great illuminating power having air supplied to it by a pipe which communicates with the diaphragm of the receiving instrument, so that when the diaphragm is caused to vibrate by the electric currents the amplitude and rapidity of the vibrations being proportioned to the sound waves the pulsations of air transmitted to the lamp cause proportional vibrations of the light. A reflector may be used for reflecting or directing the rays of light, and a lens or lenses for concentrating or condensing the light and bringing it to a focus.

We may prefer to vary the beam of rays emanating from the source of light by using a reflecting mirror which is caused to vibrate by the diaphragm or vibrating medium of the receiving instrument and reflects a varying beam of light through a lens or lenses into a dark chamber arranged as a camera.

Or we may prefer to employ as a means of changing a beam of light or other radiant energy into vibrations corresponding to sound waves sensitive jets of air, gas, water or other fluid, or we may prefer to use an oscillograph for the purpose, or any other known method of converting variations of current intensity into variations in light intensity, where the quantity or quality of the bundle of rays is controlled according to the variations of the current, may be used.

Whatever particular method or means may be employed by us for varying the light source or the rays of light emanating from it, we direct and control the light so that the variations and its intensity which correspond with the sound waves and the electric currents, will impress themselves photographically upon a sensitised transparent medium so that the impressions so made will proportionately correspond in some particular characteristic or form with the varying intensity of the light, the varying electric currents, and the varying sound waves.

For instance the impressions may be made in varying degrees of opacity and transparency or light and shade, so as to correspond with the sound waves.

They may take the form of lines or dots of varying width or sizes or varying distances apart.

Or they may take the form of a varying spiral or varying wave lines, or of an opaque band varying in width so as to vary the proportion of transparency and opacity, or any other form which may be desired.

Within the dark chamber or camera a sensitive photographic film *m* (Figure 1) wide enough to receive the photographic impressions of movements of the objects and also the impressions of the sound waves, side by side, is arranged to be translated by any suitable mechanism m^1 such as is usually employed for translating the films in an ordinary cinematographic camera.

This film is operated so that one part is translated continuously past a narrow slot or other suitable shaped opening in the chamber opposite the side where the sound waves are to be recorded, and the other part is translated intermittently past the lens *n* as in an ordinary cinematograph camera.

By this means it will be seen that the record of the sound waves will not be exactly opposite the picture of the simultaneous movement but at a short distance from it, although we may prefer to place the record of the movements and sounds in other positions relative to each other.

The record of the sound waves thus made on the right or left hand side of the film, and the photographic impressions of the motions or movements of the objects is photographed or taken simultaneously on the right or left hand side of it, side by side, so that the first of the sound wave impressions will commence at a convenient distance from the first of the impressions of the motions or movements so as to allow a loop to be made in the film (as shewn in Figure 1) in order that one part may be translated continuously and the other part intermittently.

In Figure 2 *o* indicates the sound waves upon the film and o^1 the photographic impressions.

The record thus taken of the sound waves consists of a continuous series of photographic impressions of light and shade varying in degrees of transparency and opacity corresponding with the variations and the quantity or quality of intensity of the beam of rays of light reflected or allowed to reach the film, or it may consist of, or be made to take, such other form as may be desired.

Instead of using a strip of transparent sensitive film or medium for receiving the record, a sensitive circular plate of transparent material may be employed and caused to rotate by suitable mechanism and to move or change its position so that a fresh surface is presented to the light at each revolution, and the photographic impressions of the sound waves and motions or movements of the objects will be photographed in the desired positions in series on its surface. L, L^1 are terminals to which an ordinary telephone attachment is connected so that facility of inspection as to working correctly is insured.

Or the record may be made or photographed on an opaque plate having a polished surface and reflected from it, or reflected from it by a polished surface.

We may prefer to use a transparent cylinder or some other form of record.

For the purpose of reproducing the record thus produced we employ an

instrument for translating the film similar in every respect to the former instrument described, but not enclosed in a dark box or chamber.

These are various bodies or substances whose electric conductivity is varied by the rays of light which fall upon them from the sun or other sources of light. Certain substances when exposed to light waves or radiations have the property of presenting a decreasing resistance to the passage of an electric current as the intensity of the radiation increases, and other substances have the property of presenting an increasing resistance to the passage of electricity as the intensity of the radiation increases. We may employ any of the substances of either of these classes, for the purpose of converting the various degrees of light or shade, which correspond with the sound waves, into varying electric currents, and transmitting them for reproduction at the place required.

Any variation in the quantity or quality of the intensity of the radiant energy falling upon them alters their conductivity or resistance.

We prefer to use selenium prepared in a cell so as to become most sensitive to the light rays, or have its electrical resistance or conductivity altered or varied to the greatest extent by the light falling upon it.

This cell is arranged in circuit with a loud sounding microphone or telephone H (Figure 5) having a suitable source of electric current M, and fitted with a horn or trumpet for amplifying the sounds. Or we may prefer to use a diaphragm which will vibrate and effect changes in a gas, oil or other flame, connected with a horn or trumpet for amplifying the sounds, or we may employ any other suitable means of reproducing the electrical variations produced in the current through the selenium cell.

To reproduce the sound waves and impressions of the motions or movements of the objects, the film *m* or record is placed in proper position in the reproducing instrument with a suitable source of light *p* placed behind it so that the light will project the pictures on the screen and at the same time another light p^1 is placed so as to pass through the portion of the film containing the record or photographic impressions of the sound waves, and also through a lens *q* if desired, which may be interposed between the light and the selenium cell *r* for concentrating the rays which pass through the film and on to the selenium cell. *s* is a heat absorber placed between the selenium cell and the film. When the film is translated at the proper speed the pictures will be projected upon the screen by the projecting lens *l* of the instrument, and simultaneously the light passing through the film will be caused to vary in quantity, quality, or intensity, by the varying degrees of opacity and transparency or other forms or conditions of the photographic impressions on the film. Such variations in the quantity and quality of the intensity of light will correspondingly vary the electrical conductivity or resistance in the selenium and transmit the corresponding varying current through the terminals *u*, u^1 which will produce corresponding vibrations or variations in the microphone H so producing vibrations which produce the original sounds.

The sounds may be used to cause variations in light and in a cell of selenium or other substance used to transmit the sound waves in electric currents to the receiver.

Any of the means of varying the light source or rays emanating from it as described for the recording purpose, may also be used for varying the light for the purposes of reproduction.

It is obvious that any suitable form of cinematograph mechanism may be used for translating the film, and that any desired arrangement of the pictures and record of the sound waves on the film or other medium may be used.

Instead of a microphone, where varying musical or other sounds have to be collected from a stage or the like and transmitted to the camera where they

are used to effect the light in the manner described a number of conical or other chambers may be arranged in suitable positions having their outer open ends closed by india rubber or other suitable vibrating material and having tubes leading from the smaller ends of the different chambers converging to one larger tube which transmits the vibrations to the gas or other lamp which is affected by their vibrations in the manner required.

We are aware that it is not broadly new in apparatus for recording and reproducing the sounds produced by the human voice or otherwise to employ a beam of light directed through a vibrating opaque screen containing a number of narrow slits and arranged parallel with a similarly slotted fixed screen on to a sensitive film mounted upon a transparent medium such as glass or a travelling sensitive strip for photographically recording such sounds. These photographic impressions being subsequently developed and fixed are reproduced by directing a strong beam of light so as to follow the direction of the photographic record and thence penetrate a receiver of selenium or other substance having the property of varying its conductivity of electricity in proportion to the degree of light to which it is exposed. Also that it has been proposed to arrange such receiver in circuit with a constant source of electricity as well as one or more telephone receivers.

Having now particularly described and ascertained the nature of our said invention and in what manner the same is to be performed, we declare that what we claim is :—

1. A new or improved method of and means for recording and reproducing simultaneously the movements as well as the sounds produced by existing things or objects, the cinematographic and phonographic operations being synchronously performed, substantially as described.

2. Apparatus for simultaneously recording photographically the movements and sounds produced by existing things or objects, optically reproducing the movements and simultaneously photo-electrically transmitting and reproducing the sounds, substantially as described.

3. In an apparatus of the kind claimed in Claim 2, the employment of selenium or other equivalent substance whose electric conductivity is varied by the intensity of light, substantially as and for the purpose described.

4. In apparatus of the kind claimed in Claim 2, means for varying a source of light substantially as and for the purpose described.

5. In combination in apparatus of the kind hereinbefore referred to, a collector and transmitter for the sounds produced by existing things or objects, means for electrically varying or controlling a source of light, a recording medium, means for translating the recording medium so that it receives photographic impressions of the movements and sounds to be reproduced, means for illuminating and projecting said impressions of movements, means for illuminating the photographic impressions of sounds and converting them into corresponding electric waves, and means for transmitting and reproducing said waves, all arranged and adapted to operate substantially as described.

6. In combination in apparatus of the kind hereinbefore referred to, a receiver of sounds, a transmitter for the collected sounds, an electro-magnet arranged in circuit with said trnasmitter and adapted to operate a slotted screen or mirror so as to vary light rays, a translatable film for collaterally receiving and recording simultaneous movements and sounds, a projector for photographic movement impressions, a source of light and a condenser for condensing its rays, a cell of selenium for converting light rays into electric waves, and a telephonic reproducer for said electric waves, substantially as described and shewn by the accompanying drawings.

7. In apparatus of the kind claimed above, a slotted screen comprising fixed and movable diaphragms having inter-registering openings therein in combina-

tion with an electro-magnet adapted to operate the movable diaphragm, substantially as described in reference to Figures 3 and 4 of the accompanying drawings.

Dated this 11th day of February, 1907.

EDWARDS AND Co.,
Chartered Patent Agents,
Chancery Lane Station Chambers, London,
Agents for the Applicants.

A D 1906 Aug 11 N° 18,057

HAINES & Another's COMPLETE SPECIFICATION.

1 SHEET

7th Edition

[This Drawing is a reproduction of the Original on a reduced scale.]

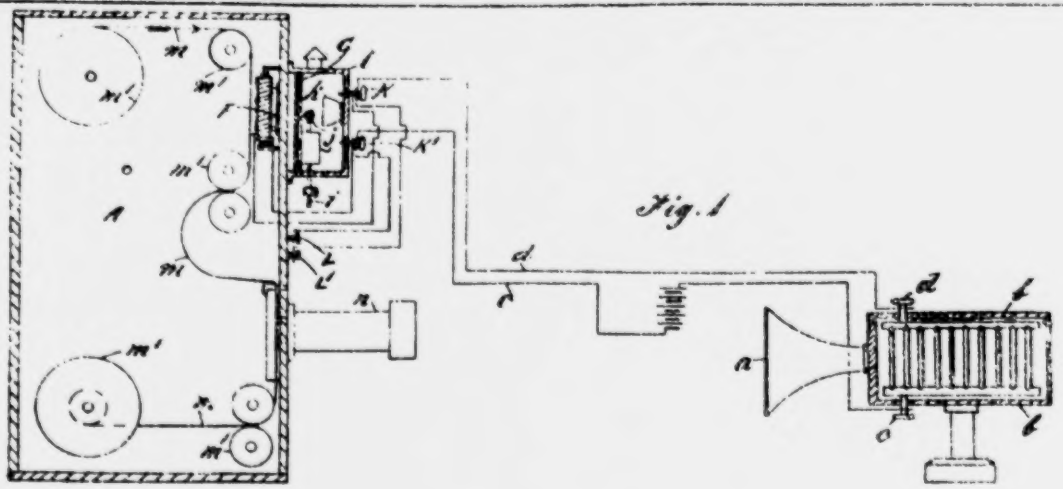

Fig. 1

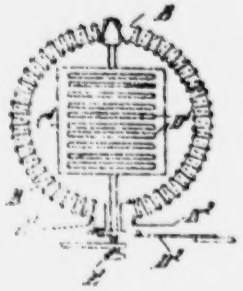

Fig. 3

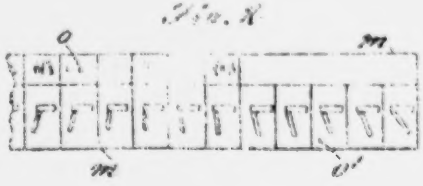

Fig. X

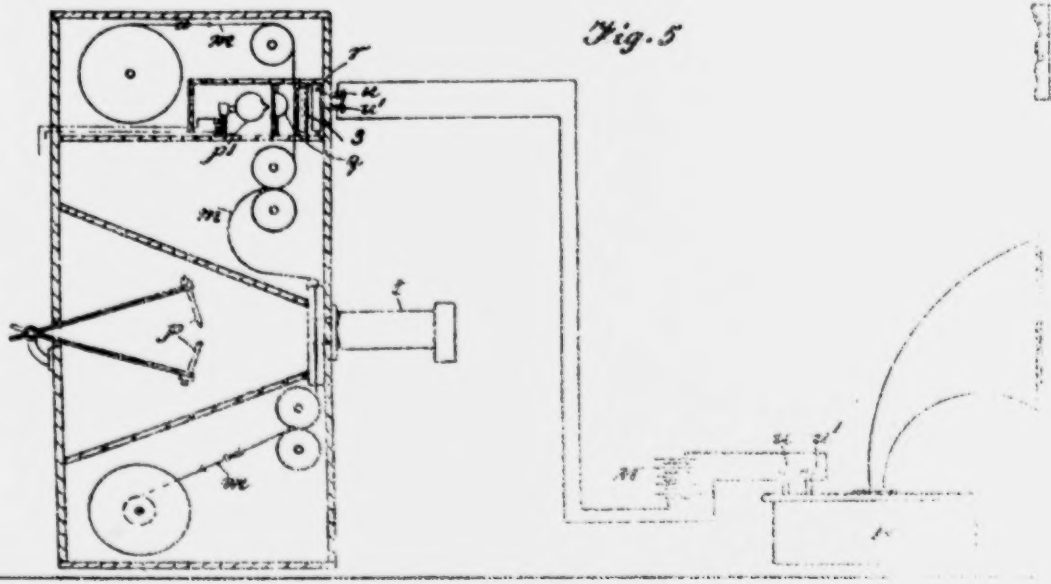

Fig. 5

Fig. 4

Die Idee der Woche:

DER PAPIERFILM

Neuer Versuch auf dem Gebiet der Produktionstechnik

VON FRANK WYSBAR

René Clair sagt in einem Interview einer Tageszeitung über seinen letzten Film „Es leben die Freiheit", daß er selber von diesem Film nach der Fertigstellung nicht in allen Teilen befriedigt gewesen wäre . . . er hätte sich manches vorher anders vorgestellt, als es sich ihm nachher in der Vorführung gezeigt hätte.

Clair rührt mit diesen Feststellungen an ein Problem, mit dem ich mich selbst mit Ihnen auseinandersetzen möchte, indem ich mir — wenn während der Produktionszeit immer wieder die nervenzerrüttende Spannung in den Vordergrund tritt: Wie wird dieser Film nun tatsächlich aussehen und im Ablauf wirken? — die Aufgabe stelle. Einer Dreh- und Regiebuch hinaus eine Konstruktion zu schaffen, die, ohne eine Vorwegnahme des Produktion darzustellen, den gedrehten Film im Ablauf, im Abrollen zeigt.

Tatsache ist, daß wir uns aus Dreh- und Regiebuchlektüre allein kein rechtes Bild machen können, weil unser Hirn einfach nur von einem Drehbuchblatt zum anderen mitliest und mitdenkt und schließlich nur ein ungefähres Eindruck haften bleibt. Tatsache ist ferner, daß in der Produktion die Spannung einsetzt, wie immer dann, wenn man über ein in Arbeit befindliches Produkt „nur ungefähr" Bescheid weiß. Aus diesem „ungefähren Wissen" um das Produkt resultieren Unsicherheit, Nervosität, rotlaufen Hin und Her — die „Schwimmen" ist so von der ersten Regiesitzung bis zur Premiere.

Ich behaupte, daß wir Produzenten uns im allgemeinen viel zu schnell auf einen Stoff festlegen, dem wir garantiert verfallen sind, wenn Finanzierung, Verleihvertrag und Engagements bereits drunhängen: meist geht es Hals über Kopf in die Produktion, weil Termine drängen; die Vorbereitung ist ungenügend — ebenständig und intensiver müssen wir arbeiten, wie in einer Drehzeit von vierzehn Tagen viele hunderttausende Mark an einem unzulänglichen dahinlaufenden Band in ein Produkt investiert werden, von dessen endgültigem Aussehen wir uns in Vorführungsraum immer wieder von neuem überraschen lassen müssen. Der „Schnitt" soll dann retten. Er entsteht so der „zusammengebastelte" Film.

Um diesem Moment völliger Unsicherheit die Spitze abzubrechen und einen hohen Grad von Wahrscheinlichkeit in die Produktionsgestaltung und von Sicherheit in die Produktionsdurchführung einzuführen, habe ich den sogenannten „Papierfilm" konstruiert, der im „Papierfilmatelier" in präziser Vorbereitungsarbeit durch Regisseur, Produktionsleiter, Kameramann und Architekt herbeizuführen sollte.

Zwischen zwei Leitrollen auf denen sich das Papier auf- und abrollt, ist eine breite Schreib- und Zeichenfläche von über 1 m Breite geschaltet, über das in der gleichen Breite das Papier läuft. Auf diesem Papierfilm" wird einstellungsweise mit Dekorationsentwurf, Kameraeinstellung und grundsätzlicher Darstellerbewegung der Film vorinszeniert. Als besonderes Hilfsmittel dienen hierbei die bereits im Modell aufgebauten Dekorationen, diese sind auf einer großen Fläche aufgebaut, die in ihren Größenverhältnissen genau mit denen des Ateliers übereinstimmt. (Das Modellatelier ist also bereits „vollgebaut".)

Ein Elektromotor läßt den Papierfilm, der außerdem noch sämtliche technischen Anweisungen, Zeiten, Längen, Materialverbrauch usw. enthält, langsam vor dem Auge des Regisseurs mit allen geplanten Einstellungen, Blenden und Schnitten abrollen, so daß es möglich ist, hier im Papierfilm-Atelier bereits den ersten Rohschnitt auszuführen. Drehbuchabänderungen vorzunehmen, ganze Szenen umzustellen oder fein nicht zu unterschätzendes Moment) sich zu der Freudigkeit durchzuringen, daß der ganze Film überhaupt nicht gedreht werden darf.

Verbindung mit Trickfilmaufnahmen zur Verbindung wichtiger Szenen und Zusammenschaltung mit Tonaufnahmen auf Nulle-Band oder Daktaphon gestatten weiteren Ausbau des Papierfilms bis zur Projektion auf die Leinwand des Vorführungsraumes.

Ich bin auf viel Kopfschütteln, Skepsis und Ablehnung gestoßen. Nach Besichtigung des ersten Musters aber haben mir Produzenten und Fachleute rückhaltlos ihre Begeisterung darüber ausgesprochen, daß hier ein Weg gefunden scheint, der geeignet ist, eine außerordentliche Ersparnis an Zeit, Material und Drehtagen und außergewöhnliche Erleichterung der Dispositionen zu erreichen.

Noch völliger Fertigstellung des Papierfilms erfolgt sein *Zerschneiden* in die einzelnen Einstellungen, die nach Atelier- und Außenaufnahmen, Synchron- und Stummeinstellungen gruppiert, ein Regiebuch für die praktische Produktionsarbeit abgeben, wie es in solcher Vollständigkeit und Gründlichkeit wohl noch nicht da war. Man hat den Einwand gemacht, daß der Regisseur sich eingeengt fühlen wird, wenn er nach einem solches präzis vorgearbeiteten Plan drehen soll. Ich möchte sagen, daß das Gegenteil erreicht wird: Der Regisseur soll durch vorherige Überwindung des technischen Kleinkrams Zeit und Freiheit gewinnen für die rein künstlerische Gestaltung des Produkts. Das ist am ehesten möglich dann, wenn die Arbeit im Papierfilm-Atelier gewissermaßen die erste Robinsonierung im Kreise der Mitarbeiter gewesen ist, weil auch diese Mitarbeiter jetzt in einer Weise in die Materie und in die Ideengänge des Regisseurs eingeweiht sind, daß eine ganz andere Intensität in der Zusammenarbeit gewährleistet ist als bisher.

Ein deutscher Schulfilm

in Frankfurt gezeigt.

Die Klinger-Oberrealschule hat als erste deutsche Schule (fast ganz Goldmittel) einen Film „O Frankenvolle Jugendzeit!" hergestellt, der es mit vielen vorzüglichen Kulturfilmen aufnehmen kann. Der Film zeigt das Leben und Treiben im Landheim der Schule, das inmitten eines idyllischen Dörfchens der Marburger Gegend liegt, dem nicht gerade ernsten und sorgenvollen Schulbetrieb während der drei Wochen des Lagerlebens und die mannigfaltigen Streiche und Späße der Jungens und der Lehrer.

Der Star des mit humoristischen Titeln vielleicht etwas überladenen Films ist der Kameramann Dinkelbach, ein Lehrer der Schule. Länge des Films 1200 Meter.

Die Debatte um Bolten-Baeckers

Hans Vogt ein „prominenter" Unbeteiligter

Als alles noch auf den stummen Film schwor (1927) war es den Tonfilm nicht nur zu glauben, sondern ihn auch zu verwirklichen. Es verband sich mit Engel a. Mannesfin, sich selbst Erfindung und alle Experimente daran, auf den Tonfilmapparaten zu hören. Wir wissen, es hat dann drei Erfinder gegeben. Am 17. September 1928 wurde in der Akademie in Berlin der erste öffentliche Tonfilm vorgeführt, nach dem gleichen Verfahren, wie es auch heute noch von der Tobis benutzt wird. Wir kennen die Leidensgeschichte dieses Erfindungsprinzips.

In einer Hinsicht bedeutsamen Beschränkung dieses allgemeinen Teils wie zum Beispiel für diesmal perfektionieren, entfernt sich Hans Vogt von heute.

In den gesamten Tonfilm-Prozessen, die bisher liefen und noch laufen (vor allem in Amerika) spielen unter den vielen hundert Patenten vor allem drei Patente eine entscheidende Rolle, als deren persönlicher Urheber ich mich bekennen darf

das Patent Nr. 388 303 vom 14. April 1921, das die gesamte Entwicklung schützt;

das Patent Nr. 397 696 vom 22. Mai 1920, das den gleichmäßigen Lauf des Filmes zum Gegenstand hat; das Patent Nr. 417 217 vom 2. März 1919, das die Photozelle und tragbahnlose Lichtquelle schützt.

Diese Patente führten die Firmen Klangfilm-Tobis beziehungsweise gaben den verbündeten Firmen Magnetophonverfahren. In Amerika besitzt diese Patente (gekauft für 300 000 schw. Franken) William Fox und führt darauf jetzt Prozesse im Werte von vielen hundert Millionen Dollar. Es ist nicht angängig, die erfinderische Arbeit, als deren Ergebnis diese Patente entstanden, und das deutsche Patentamt bezüglich seiner Prüfung zu verurteilen wie es Bolten-Baeckers getan hat. Das Entwicklungspatent ist das Ergebnis einer langen Untersuchungsreihe zur Wahrung der Proportionalität zwischen Negativ und Positiv, das Schwungrad-Patent die Folge eingehender Studien über die Gleichmäßigkeit des Filmdurchlaufes, und im Photozellen- und Glimmlampen-Patent sind diejenigen prinzipiellen physikalischen Vorschläge enthalten, die für tadellose Aufnahme und Wiedergabe von Schallvorgängen auf Filmbändern entscheidend sind.

Ein Erfinder nützt durch seine Leistungen der Allgemeinheit. Seine Erfindungen verdienen einen Schutz, aber es wäre wünschenswert, den Rechtscharakter dieses Schutzes insofern abzuändern, als eine Erfindung von allgemeinem Interesse nicht zu einem Objekt kapitalistischer Spekulationen herabgewürdigt werden dürfte. Die Entwicklung des sprechenden Films innerhalb der Tri-Ergon-Gemeinschaft hat 60 000 RM. gekostet. Dieses Geld zu verzinsen, den Erfindern und Kapitalisten, die die Versuche finanzierten, eine kleine Rente zu gewähren, wäre ein leichtes gewesen und gerecht. Die deutsche Filmindustrie hat sich schnell, schlau und vorteilhaft zusammengefunden, nicht um diese Angelegenheit gebührend Zu Lösen (und Verhandeln) hat sich in den Besitz der Patente gesetzt und ausländische Gesellschaften von rd. 30 bis 40 Millionen Gulden um diesen Komplex herum gegründet. Man mache sich klar, daß die Verzinsung dieser Summen, über deren Verbleib es einmal interessant wäre, Näheres zu hören, in erster Linie die hohen Lizenzen bedingen.

Ton-Bildaufnahmen auf gleichen Filmmaterial

Broesing zur Kopierfrage.

Der klärende Vortrag von Bolten-Baeckers, der das filmpolitische Ereignis dieser Woche war, hat, wie gemeldet, viele Zuschriften an uns erbracht, die von unseren zuständigen Abteilungen noch geprüft werden.

Für heute bringen wir zunächst eine interessante Äußerung von Lignose-Broesing:

Wir lasen mit Interesse die Ausführungen des Herrn Bolten-Baeckers.

Die Darstellung, die Herr Bolten-Baeckers von der Gesamtsituation gibt, bringt zusammenfassend den ja mit langem bereits bekannten Komplex der Fragen um die Patentsituation für das Tonaufnahmeverfahren.

Wie Herr Bolten-Baeckers selbst feststellt, [illegible] ist auch der wirtschaftliche Punkt des Patentes der Tobis.

In der Darstellung des Herrn Bolten-Baeckers möchten wir Ihnen noch einige ergänzende technische Ausführungen zur Verfügung stellen.

Herr Bolten-Baeckers erwähnt, daß er gespannt sei auf die Begründung des Standpunktes „Entwickeln von Bild und Ton-Negativen auf gleichem Rahmen bei gleicher Entwicklungszeit" sei ein getrenntes Verfahren. Bei allen Fehlern in der Praxis vorgekommenen Fällen in denen dieser Punkt streitig war [illegible] Beleuchtungs-Prozeß, hat es sich wie Herr Bolten-Baeckers allerdings nicht näher erläutert am Arbeiten mit verschiedenem Material für Aufnahme von Ton und Bild gehandelt. Ob ein solches Verfahren unter das Entwicklungspatent fällt, sei dahingestellt, doch wurde, wie die gelungenen Proben zeigen, auch seitens der Tobis die Anwendbarkeit des Tobis-Patentes für diesen Fall bezweifelt.

Das Tobis-Patent der getrennten Behandlung kommt jedoch nach Ansicht maßgebender Sachverständiger in Fortfall, sobald man für die Aufnahme das gleiche Material für Bild und Ton verwendet und die Ton- und Bildaufnahmen, wie auch Herr Bolten-Baeckers schon richtig darstellt, im gleichen Entwicklungs- und Kopierverfahren behandelt. Hierdurch wird auch der einzige Einwand daß bei Verwendung verschiedener Emulsionen der Entwicklungsvorgang zum Teil in die Emulsion verlegt und so trotz gleicher Entwicklungsdauer eine verschiedene Entwicklung erzielt wird, entkräftet.

Die Arbeiten, die wir in den letzten Monaten mit unserem Braunschen Rohr Aufzeichnungs-System weitergeführt haben, führten zu dem Ergebnis daß die Lichtempfindlichkeit unseres Apparates für die Tonaufzeichnung eine so große ist (westlaus größer als bei den mit anderen Aufzeichnungsverfahren arbeitenden, zweifellos ausgezeichneten Methoden), daß der Verwendung des gleichen Materials für die Ton- und Bild-Aufnahme nichts mehr im Wege steht.

Wir sind daher der Ueberzeugung, daß der Herstellung von Tonfilmen nach diesem neuen Verfahren das Entwicklungspatent der Tobis nicht entgegensteht.

Wir erwähnen dies, weil wir glauben, daß für die Beurteilung der Gesamtsituation und auch für die Stellungnahme der Produktion zu den schwebenden Fragen der Tonaufnahmeverfahren der vorgenannte Punkt von wesentlicher Bedeutung sein könnte.

Chronik der Uraufführungen 3.

Skandinavien.

1. Januarwoche:

Helsingfors „Timmer Bettaras bröd" („Die Brot des Holzfällers"). Produktion: Suomi Filmi, Helsinki. Regie: Dir. Erkki Karu. Hauptrollen: Helena Koskinen und Urho Somersalmi. Finnisches Volksstück. Wundervolle Naturaufnahmen. Großer Erfolg.

2. Januarwoche.

Stockholm: „Halvvägs till himmelen", („Auf halbem Wege zum Himmel"). Produktion: Paramount-Svenska Avdelning. Mit Edvin Adolfson, Elisabeth Frisk und Karin Swanström.

Helsingfors: „Kaarna och Helina", („Kraniche und Heliaa"). Produktion: O. Y. Suomen Filmi, Helsinki. Regie: Kaarna. Hauptrollen: Tauno Brännäs und Iris Knape-Jaderholm. Lyrisches Volksstück aus dem Leben der Kraniche in Finnlands Grenzgebieten. Viele lustige Volksszenen mit Kranichgesängen.

3. Januarwoche

Stockholm: „Hans liv match". („Der Kampf seines Lebens"). Produktion: A/B Svensk Filmindustri. Regie: Per-Axel Branner. Hauptrollen: Björn Berglund, Birgit Tengroth, Hakon Westergren, Sigurd Wallén, Carl Ström und Nisse Lundell. Hervorragende jugendliche Besetzung. Hintergrund des Films: Fußball-Länderkampf Dänemark gegen Schweden. Einer der besten Svensk-Filme.

DEFENDANT'S EXHIBIT R

3265

Defendant's Exhibit R.

TRANSLATION.

from the Film-Kurier of February 6, 1932.

The debate about Bolten-Baeckers.

H a n s V o g t

a "prominent" disinterested party.

3266

At a time when everybody was still swearing by the silent film (1919), it was HANS VOGT who had the courage not only to believe in the sound film but also to carry it out in practice. He joined with Engel and Massolle, sacrificed his position and savings to solve the problem of the sound film. We know that the three inventors were successful. On September 17, 1922, the first one hour sound picture program was demonstrated at the Alhambra at Berlin, using the same method as is still used at the present time by Tobis. We know the unhappy story of this inventor complex.

3267

In a long important document, the general part of which we have for the time being eliminated for reasons of economy of space, HANS VOGT says as follows:

"In the entire sound picture suits which have heretofore been conducted and are still being conducted (above all in the U. S. A.), among many hundreds of patents three patents above all play a deciding role and of which I can call myself the personal inventor.:

the Patent *368,383* of April 14, 1921 which protects the separate development,

3268 *Defendant's Exhibit R.*

the Patent *387,058* of May 22, 1920 which has as its subject matter the uniform motion of the film.

the Patent *417,967* of March 3, 1919 which protects the photo-electric cell and the inertialess source of light.

These patents led to the agreement between Klangfilm and Tobis and impart to the combined companies the character of a monopoly. In the
3269 United States these patents (bought for 200,000 Swiss franks) are owned by William Fox, and he is now conducting suits thereupon in the value of many millions of dollars. It is not permissible that the inventive work as a result of which these patents were created, and the German Patent Office with respect to its examination, be ridiculed as is done by Bolten-Baeckers. The devolping patent is the result of a long series of experiments to protect the proportionality between positive and negative, the flywheel patent the result of detailed studies with re-
3270 spect to the uniformity of the film transport, and in the photo-electric cell and glowlight patent those principal physical proposals are contained which are decisive for inertialess recording of sound frequencies upon strips of film.

An inventor by his efforts serves the general public. His inventions deserve a protection, but it would be desirable to alter the legal character of such protection so that an invention of general interest is not degraded into an object for capitalistic speculation. The development of the talking film within the Tri-Ergon group has cost 60,000 Reichsmark. To give interest on this

Defendant's Exhibit R. 3271

money and to allow a small profit to the inventors and capitalists who financed these experiments would have been a simple matter and been equitable. The German film industry at this time with its old wisdom and prejudices did not interest itself in this matter. An outsider (and speculator) obtained possession of the patents and formed foreign companies of a capital of about thirty to forty million gulden. It should be made clear that the interest on these sums, as to the whereabouts it would be interesting to hear more details, is what primarily causes the high royalties. 3272

3273

DEFENDANT'S EXHIBIT S

Berlin, den 6. Februar 1929.

United States District Court
Eastern District of New York,
Exhibit S in evidence
Date
Clerk
Deputy Clerk

In Sachen

Tonbild-Syndikat Aktien-Ges.

gegen

Klangfilm - G.m.b.H.

Überreiche ich ergebenst anliegenden Antrag auf Erlass einer einstweiligen Verfügung und bitte, mit Rücksicht darauf, dass die beanstandete Tonbildfilm-Vorführung, wie glaubhaft gemacht ist, schon an Freitag, den 8. ds. Mts. 12 Uhr stattfinden soll, um möglichste Beschleunigung Entscheidung auf diesen Antrag.

Für die Zustellung durch den Gerichtsvollzieher gebrauche ich eine Stunde Zeit.

Der Rechtsanwalt:

Landgericht I
16. Zivilkammer

Berlin, den 8. Februar 1929

Landgericht I, Zivilkammer 16.

Berlin

Theodor Kallmann
Rechtsanwalt und Notar
Berlin SW.47, Yorkstr. 76
Fernsprecher: Hasenheide 2113

Berlin, den 5. Februar 1929.

A n t r a g

auf Erlass einer einstweiligen Verfügung der Firma Tonbild-Syndikat Aktien-Gesellschaft in Berlin, Jägerstr. 6, vertreten durch ihren Vorstand Dr. Hans Henkel und Arthur Fritzschknecht,

Antragstellerin,

Prozessbevollmächtigter: Rechtsanwalt Th. Kallmann in Berlin SW.47, Yorkstr. 76

g e g e n

die Firma Klangfilm- G.m.b.H. in Berlin, Askanischer-Platz 4, vertreten durch ihre Geschäftsführer Dr. Kirn und Ackermann,

Antragsgegnerin,

n das

Landgericht I
16. Zivilkammer

B e r l i n

I.

Die Klägerin ist eine Aktiengesellschaft, die sich gebildet hat auf Grund des Zusammenschlusses der früheren Triergon-Aktiengesellschaft, der deutschen Tonfilm-Aktiengesellschaft, der Küchenmeister- und der Vester-Gruppe, kurz aller

s/s

in Deutschland massgebenden Stellen, die sich seit Jahren mit der Schaffung von Tonfilmen beschäftigt haben.

In die Klägerin sind deshalb alle wesentlichen deutschen Patente und Schutzrechte oder die ausschliessliche Lizenz an ihnen, für das Gebiet des Tonbildfilmes, bei ihrer Gründung eingebracht worden.

Das Stammkapital der Antragstellerin beträgt 12 Millionen.

Die Antragsgegnerin ist vor einigen Wochen gegründet worden.

II.

Die Antragstellerin ist Inhaberin der ausschliesslichen Lizenz an dem deutschen Reichspatent 368 383 (Anlage 1).

Vertragsabschrift und eidesstattliche Versicherung über die ausschliessliche Lizenz liegen in Anlage 2) bei.

Der Patentanspruch 1), auf den der nachfolgende Antrag abgestellt ist, lautet

" Verfahren zum Herstellen von Positivfilmen, welche bildreihen- und photographisch aufgenommene Tonschrift enthalten, dadurch gekennzeichnet, dass die Negative getrennt entwickelt werden".

Die Beschreibung des Patentes ist so leicht verständlich, dass zur Vermeidung von Wiederholungen kurzerhand auf sie verwiesen werden kann.

III.

Die Antragsgegnerin ist zwar erst vor wenigen Wochen gegründet worden, geht aber offenbar damit um, mit möglichster Beschleunigung der Antragstellerin das deutsche Geschäft abzukämpfen. Dem Gericht wird bekannt sein, dass die Schaffung des Tonbildfilmes in Deutschland gerade erst im Entstehen begriffen ist und dass von den Interessenten, die sich zur klägerischen Gesellschaft zusammengeschlossen haben, erhebliche Millionenbeträge bereits in der Vergangenheit aufgewandt worden sind, die jetzt erst wirtschaftlich nutzbar zum Ergebnis kommen sollen.

Eine Störung dieses, in der Entwicklung begriffenen Industriezweiges würde also gerade in dem vorliegenden Stadium die Antragstellerin ausserordentlich empfindlich treffen.

Die Antragsgegnerin hat nun einer erheblichen Anzahl von Interessenten angekündigt, dass sie am Freitag, den 8. Februar ds.Jhrs. und an den folgenden Tagen, Tonbildfilme vorführen will. Sie hat diesen Interessenten mitgeteilt, dass

diese zur Vorführung bestimmten Tonbildfilme insbesondere solche der General Electric Comp. (sogenannte Photophone-Filme) sein werden.

Dies wird glaubhaft gemacht durch die eidesstattliche Versicherung des Prokuristen Dr. Hans Böhm,

Diese Photophonfilme der General Electric Comp. sind nun aber nach dem Verfahren des klägerischen Patentes Nr. 368 383 hergestellt, d.h. die Negative sind getrennt entwickelt worden.

Dies wird glaubhaft gemacht durch das anbei überreichte Buch der Transactions of the Society of Motion Picture Engineers, Seite 87.

Hier ist die Herstellung der Filme nach dem Verfahren der General Electric Comp. beschrieben worden. Es ist ohne weiteres zu erkennen, dass das hier beschriebene Verfahren wortgetreu dem in Deutschland patentierten Verfahren entspricht.

Der Ordnung wegen wird eine vollständige Übersetzung der Seite 87 beigefügt, sodass das Gericht ohne weiteres die Nachprüfungsmöglichkeit hat.

Die Produkte also, die in Amerika nach diesen Verfahren hergestellt werden, stellen eine Verletzung des deutschen

Patentes 368 383 dar, sobald sie die deutsche Grenze überschreiten.

IV.

Die Antragstellerin wehrt sich dagegen, dass die Antragsgegnerin nun den Interessenten, die auf den vorliegenden Gebiete den gleichen Kreis darstellen, amerikanische, patentverletzende Produkte vorführt, um für die Antragsgegnerin Reklame zu machen und den Kundenkreis, der auch der der Antragstellerin ist, zu deren Schaden zu beeinflussen.

Die Antragstellerin begnügt sich damit, den nachstehenden Antrag auf den Patentinhalt hin zu beschränken. Allerdings sollen nicht nur die amerikanischen Filme der General Electric Comp, getroffen werden, wenn diese hier in Deutschland von der Antragsgegnerin vorgeführt werden, sondern auch solche Filme, die etwa die Antragsgegnerin in Deutschland in der Weise hergestellt hätte, dass Tonfilme und Bildfilme getrennt entwickelt werden.

V.

Die Dringlichkeit ergibt sich bei dem vorstehend dargelegten Sachverhalt von selbst. Es wird gerichtsbekannt sein, dass dieser ganze Industriezweig in der Entwicklung begriffen ist.

Die Antragstellerin würde später auch nicht nachweisen können, welche Interessenten ihr durch die rechtswidrigen Vorführungen der Antragsgegnerin verloren gegangen sind. Sie muss deshalb Vorsorge treffen, dass dieser Schaden, der später nicht wieder gutzumachen ist, vorher vermieden wird.

Mit Rücksicht darauf, dass die Vorführung schon am Freitag dieser Woche erfolgt, wird gebeten, die Entscheidung ohne mündliche Verhandlung so rechtzeitig zu treffen, dass sie noch der Antragsgegnerin zugestellt werden kann.

Die Antragstellerin ~~verhindert~~ will mit dem nachstehenden Antrag keineswegs die Vorführung von Tonbildfilmen verhindern, die auf eine andere Art entwickelt sein würden, als das Patent 368 383 das Herstellungsverfahren schildert.

VI.

In Vollmacht der Antragstellerin beantrage ich somit:

der Antragsgegnerin wird bei Vermeidung einer vom Gericht festzusetzenden fiskalischen Geldstrafe in unbeschränkter Höhe oder Haftstrafe von 6 Monaten für jeden Fall der Zuwiderhandlung verboten,

im Inhalt des deutschen Briefs

ein Verfahren zum Herstellen von Positivfilmen, welche Bildreihen und fotografisch aufgenommene Tonschrift enthalten, anzuwenden, das dadurch gekennzeichnet ist, dass die Negative getrennt entwickelt werden, und die nach einem solchen Verfahren hergestellten Filme gewerblich feilzuhalten, vorzuführen oder zu gebrauchen.

Den Streitwert gebe ich mit Rücksicht auf die Dringlichkeit und Wichtigkeit dereinstweiligen Regelung auftragsgemäss auf 100.000 Mark an.

Der Rechtsanwalt:

Dr. Ullmann

Anlagen - Verzeichnis :

1.) Patentschrift Nr. 368.323

2.) Eidesstattliche Versicherung des Dipl.Ing.Ehrenhaft,

3.) Buch der Transactions

4.) Deutsche Uebersetzung der Seite 87,

5.) Eidesstattliche Versicherung K a l i n a ,

6.) Prozessvollmacht

7.) Eidesstattliche Versicherung des Dr. B ö h m ,

Den etwa erforderlichen Stempel bitte ich zu den Gerichtskosten zu erfordern.

Prozeß-Vollmacht

—o—

Den Herren

Rechtsanwalt Th. Kallmann, Berlin, Yorkstraße 76

erteile ich hierdurch Vollmacht zur Führung des

von

Kläger

gegen

Beklagte

wegen bei dem gericht zu

anzustellenden (angestellten) Rechtsstreites mit der besonderen Ermächtigung:

1. in den aus der Zwangsvollstreckung, insbesondere in Gemäßheit der §§ 731, 767, 768, 771, 785, 805, 878 Z.P.O. entstehenden Prozessen, sowie im Verfahren behufs Eröffnung des Konkurses über das Vermögen des Gegners, im Konkurse selbst und in den durch das Konkursverfahren entstehenden Rechtsstreitigkeiten zu vertreten;
2. dem zahlungspflichtigen Gegner Stundung zu gewähren;
3. von der Gegenpartei und aus der Konkursmasse den Streitgegenstand selbst, auch wenn sich derselbe bei der Hinterlegungsstelle befindet, in Empfang zu nehmen.
4. Aufrechnungserklärungen für abzugeben und entgegenzunehmen;
5. sechs Monate nach rechtskräftiger Entscheidung des Rechtsstreites die nicht abgehobenen Handakten zu vernichten.
6. die auf Verlangen gefertigten Abschriften außer der Auslagenpauschsumme des § 76 der Gebührenordnung in Rechnung zu stellen.

, den ten 192

TONBILD-SYNDIKA.
AKTIENGESELLSCHAFT

Eidesstattliche Versicherung.

-.-.-.-.-.-.-.-.-.-.-.-.-.-.-.-.-.-.-

Jch bin Leiter der Patentabteilung der Tonbild-Syndikat - Aktiengesellschaft in Berlin Jägerstr.6.

Jch weiss aus eigener Kenntnis, dass durch Vertrag vom 3o. August 1928 der Firma Tonbild-Syndikat- A.G. (Tobis) die ausschliessliche Generallizenz für das Patent Nr.368.383 erteilt worden ist. Jn dem Vertrage heisst es wörtlich, dass der Tobis an den den Gegenstand des Vertrages bildenden Rechten " eine zeitlich, örtlich,qualitativ, quantitativ unbeschränkte ausschliessliche Generallizenz " eingeräumt wird.

Ausgenommen sind dann bei den Ländern die Vereinigten Staaten von Nord-Amerika,Kanada,Mexiko und die nordamerikanischen Kolonien.-

Jn § 2 des Vertrages heisst es dann ferner wörtlich: " Tobis hat das Recht, im Rahmen der Generallizenz alle Patentbefugnisse im eigenen Namen auf seine Kosten positiv und in Abwehr auszuüben."

Obiges versichere ich an Eidesstatt.

Berlin,den 6. Februar 1929

[illegible]

1103

Eidesstattliche Versicherung.

Ich versichere folgendes an Eidesstatt:

Ich bin Prokurist der Firma Tonbild-Syndikat-Aktiengesellschaft.

Mir haben in den letzten Tagen mehrere Filmfachleute mitgeteilt, dass im Universum-Kino am Lehniner Platz seitens der Klangfilm- G.m.b.H. wiederholt Vorführungen stattgefunden haben, bei welchen Tonbildfilme gezeigt wurden.

Die Herren von der Klangfilm-G.m.b.H, hätten erklärt, es handle sich u.a. insbesondere um Tonbildfilme, die nach dem amerikanischen Verfahren der R.C.A. Photophone (General Electric Company) hergestellt seien.

Das General Electric Verfahren ist beschrieben in dem Buch Transactions of the Society of Motion Picture Engineers, Band XII Nr. 33 vom April 1928 auf Seite 87.

Ich möchte die Namen dieser Gewährsleute zunächst nicht nennen, weil sie auch mit uns in Geschäftsverbindung stehen und weil meiner eigenen Firma dadurch unter Umständen Nachteile entstehen könnten.

Berlin, den 6. Februar 1929.

Hans Böhm

E I N L A D U N G :

Die Klangfilm G.m.b.H., Berlin, gestattet sich Ew. Hochwohlgeboren zu der am Freitag, dem 8. Februar 1929, mittags 12 Uhr, im

UFA-THEATER=UNIVERSUM, LEHNINER-PLATZ

stattfindenden Vorführung ergebenst einzuladen. Es werden vorgeführt, Tonbildfilme, Bildfilms mit synchronisierter Musikbegleitung, sowie Klang- und Wochenschau, ferner Beispiele für Quvertüren u. Zwischenmusik.

KLANGFILM G.M.B.H.
Berlin SW.11, Askanischer-Paltz 4

=:=:=:=:=:=:=:=:=:=:=:=:=:

Hiermit versichere ich an Eides statt, dass die vorstehende Abschrift von mir wortgetreu abgeschrieben worden ist.
Berlin, den 6. Februar 1929

Marg. Kalina

1105

Uebersetzung

der Seite 87 von "Motion Pictures with Sound-Marvin".

..... Die Erfahrung der General Electric Company in der Entwicklung von Lautsprechern hoher Qualität ist ausgenützt worden, und man glaubt, dass die gegenwärtige Form die zurzeit bestmögliche darstellt. Widerhall in dem Raum, in dem der Ton wiedergegeben wird, kann natürlich das Ergebnis beeinträchtigen und sollte bei jeder einzelnen Installation berücksichtigt werden.

Es sollte noch eine andere Form der Störung, die man nicht eigentlich Verzerrung nennen kann, erwähnt werden. Das ist das Vorhandensein von Lärm von aussen, wie Summgeräusche, mechanische Schwingungsgeräusche, Radiostörungen etc.

Die Hauptpunkte in der Entwicklung des Systems sind skizziert worden. Es soll hier nicht versucht werden, die Lösung der obigen Fragen im Einzelnen zu besprechen. Man hat im Laboratorium eine leidlich umfassende Kenntnis des Prozesses erlangt in seinen wesentlichen Punkten und ist in stetem Fortschritt zur völligen Ausmerzung der Fehler begriffen. So ist das Hemmnis, das 30 J vor denen stand, die daran arbeiteten, dem kinematographischen Bild den Ton zuzufügen, im Begriff, überwunden zu werden.

Das zu demonstrierende System kann, wie folgt, skizziert werden: Bilder, die mit einer Normalkamera mit gleichmässiger Schnelligkeit aufgenommen werden, ergeben ein Bildnegativ von der selben Grösse wie bei der jetzigen

Theodor Hallmann
Rechtsanwalt und Notar
Berlin SW.47, Yorckstr. 7b
Fernsprecher: Hasenheide 2118

Jetzt Fernsprecher: F. 5. Bergmann 2118

Berlin, den 8. Februar 1929.

In Sachen
Tonbild-Syndikat A.G.
gegen
Klangfilm - G.m.b.H.

Eilt sehr!

überreiche ich ergebenst die Urschrift eines Schreibens der Firma S. Klein (Lyra-Film) an meine Partei.

Der Inhalt dieses Schreibens zeigt ganz eindeutig, dass die Klangfilm-G.m.b.H. die Herstellung von Tonbildfilmen anbietet, die nach dem Patent der Antragstellerin Nr. 368 383 entwickelt worden sind.

Der Rechtsanwalt:

Hallmann

das
Landgericht I
16. Zivilkammer

Berlin

1107

S.Klein
Logos,Kultur und Spielfilm G.m.b.H.
SW.48.Friedrichstr.236.

Berlin,7.Februar 1929.
Nürnbergerst.6.

Eingegangen
18 FEB 1929
die

Tonbild-Syndikat Aktiengesellschaft

B e r l i n W 8,
Jägerstr.6.

Anläßlich der seinerzeit mit Ihnen geführten Verhandlungen, betreffend die Herstellung von Reklamefilmen,versprachen Sie mich beiProduktionsmöglichkeit verständigen zu wollen.Inzwischen habe ich ersehen,daß Ihre Produktion bereits soweit fortgeschritten ist,daß unsere Verhandlungen konkreter gestaltet werden konnten.Ich bitte Sie mir deshalb mitzuteilen ob ich in absehbarer Zeit mit der Filmherstellung rechnen kann.

Da ich von Ihnen lange nichts gehört habe,bin ich auch mit der Klangfilm G.m.b.H.in Verbindung getreten und werde selbstverständlich auch dieses System bei der Durchführung meines Programms in Konkurrenz ziehen.Für mich ist allenfalls ausschlaggebend nach welchem System die Herstellungskosten billiger sind.Wie mir bei der Klangfilmgesellschaft gesagt wurde, muß bei der Aufnahme nach deren System,mit doppelten Kosten gerechnet werden,weil die Aufnahme der Töne und Bilder auf je einen besonderen Film erfolgen,die einzeln entwickelt werden müssen und erst nachher auf einen gemeinsamen Positivfilm kopiert werden können.

Ich frage Sie nun an ob bei Ihrem Aufnahmeverfahren auch diese doppelten Kosten entstehen.Für mich wäre es natürlich von großer Bedeutung,wenn aus Ersparnisgründen die Aufnahmen gleich auf einen gemeinsamen Film gemacht und dieser dann in einer gewöhnlichen Kopiermaschine vervielfältigt werden könnte.Seien Sie bitte so freundlich und informieren Sie mich darüber und nennen Sie mir bitte auch gleichzeitig Ihre Preise für Vorführungsapparate,welche möglichst transportabel sein

sollen. Teilen Sie mir freundlichst auch mit, ob Sie jetzt schon in der Lage sind mir einen Aufnahmeapparat zu liefern oder unter welchen Bedingungen Sie mir einen solchen zeitw[illegible] zur Verfügung stellen könnten.

In Erwartung Ihrere baldigen Nachrichten, empfehl[illegible] ich mich Ihnen

hochachtungsvoll

[illegible]

.G.29

18

Landgericht I Berlin

Gesch.Nr. Q 33 Q 5 29

Kostenrechnung

in Sachen Tonbild-Syndikat 1. Klangfi

Lfd. Nr.	Blatt der Akten	Gegenstand des Kostenansatzes	Wert des Gegenstandes R.M.	zu erheben sind überhaupt R.M.	Rpf.	Bemerkungen
1		Gebühr für das Verfahren § 32 Nr.1 D.G.K.Ges.	10.000	65	—	A. Gegenschrift nach Zustell.
2		Vollmachtstempel Tarifst.19 St.St.G.				
2		Porto hierfür			08	
			Le	65,08		IX 33258 29

Schuldner:

Antragst.

Berlin, den 11. Feb 1929

Justizinspektor-Justizobersekretär.

2.5.29

Rechtsanwälte und Notare
Dr. Danziger
Dr. Münninghoff
Berlin W. 10
Margaretenstraße 8
Noll. 1596/97.

Berlin, den 15. Februar 1929 .

15. II.

In Sachen
Tonbild gegen Klangfilm
B.Q. 5.29

2

Eilt sehr.

Überreichen wir anliegend Widerspruch und Ladung .

Mit Rücksicht darauf, dass die einstweilige Verfügung binnen wenigen Stunden ohne mündliche Verhandlung vom Gericht gegeben wurde, dürfte es ein Gebot ausgleichender Gerechtigkeit sein, dass es mit Rücksicht auf die Wirkungen der einstweiligen Verfügung notwendig ist , den Termin zur Verhandlung über den Widerspruch , alsbald anzuberaumen .

Es wird gebeten ,
Termin auf den nächsten Terminstag , den 19.d.Mts. anzuberaumen und die Ladungsfrist auf 24 Stunden abzukürzen .

Rechtsanwalt .

An das
Landgericht I,
Berlin .
- -.-.-.-.-.-

D/D

1111

Rechtsanwälte u. Notare
Dr. Danziger
Dr. Münninghoff
Berlin W. 10
Margaretenstraße 8
Noll. 1596/97.

Gerichtsabschrift.

Berlin, den 14. Februar 1929.

W i d e r s p r u c h

In Sachen

der Firma Tonbild-Syndikat Aktiengesellschaft in Berlin, Jägerstrasse 6, vertreten durch ihren Vorstand, Dr. Hans Henkel und Arthur Frischknecht,

-Prozessbevollmächtigter: Rechtsanwalt Th. Kallmann, Berlin SW.47, Yorckstrasse 76-

gegen

die Firma Klangfilm G.m.b.H. in Berlin, Askanischer Platz 4, vertreten durch ihren Geschäftsführer Dr. Kirn und Dr. Akemann,

-33. O. 5/29-

Verhandlungstermin
am 21. 2. 1929 Uhr
Gerichtsgebäude Grunerstraße
Stadtwerk, Zimmer Nr. 6
Berlin, den 17. 2. 1929
Landgericht I
Zivilkammer 12
Der Vorsitzende.

das
Landgericht I
B e r l i n .

überreichen wir Vollmacht der Antragsgegnerin und legen gegen den Beschluss des Landgerichts I Berlin vom 8. 2. 29

Widerspruch

ein, mit dem Antrage,

die einstweilige Verfügung vom 8. 2. 29 insoweit aufzuheben, dass hinter dem Wort "welche" eingefügt werden die Worte: "auf einem Filmband".

Zur mündlichen Verhandlung über diesen Widerspruch laden wir die Antragstellerin vor das angerufene Gericht zu Händen ihres Prozessbevollmächtigten, Rechtsanwalt Th. Kallmann, Berlin SW.47, Yorckstrasse 76, zu dem von dem Herrn Vorsitzenden anzuberaumenden Termin mit der Aufforderung, etwaige Einwendungen und

P. beweis-

Beweismittel dem Gericht und dem unterzeichneten Prozessbevollmächtigten in einem Schriftsatz mitzuteilen.

Begründung:

Der vorliegende Widerspruch richtet sich im Augenblick gegen die einstweilige Verfügung nur insoweit, als dies in dem vorstehenden Antrage zum Ausdruck gebracht ist.

Liest man den Antrag vom [illegible] und die [illegible] beigefügte Uebersetzung der Seite [illegible] von Blatt [illegible], so erhält man zunächst den Eindruck, als ob sich der Antrag richtet gegen ein Herstellungsverfahren, bei dem Ton- und Bildfilme getrennt entwickelt, dann aber von beiden ein kombiniertes Positiv auf einem einzigen Film erzeugt wird.

Am Schluss von IV der Begründung des Antrages kommt die erste Unklarheit, indem dort gesagt ist, der Antrag solle sich auch richten gegen solche Filme, die etwa von der Antragsgegnerin in Deutschland hergestellt werden, und bei denen Tonnegativ und Bildnegativ getrennt entwickelt werden. Hier fehlt das Merkmal der Vereinigung der getrennt entwickelten Filme zu einem Film. Ebenso fehlt das Merkmal im Antrag. Und es fehlt auch in dem erlassenen Beschluss.

Die Filme, welche die Antragsgegnerin in Deutschland hergestellt hat, entstehen so, dass stets Ton und Bild auf getrennten Filmstreifen sich befinden. Die Aufnahme von Ton und Bild erfolgt auf getrennten Bildstreifen, die Entwicklung erfolgt auf getrennten Bildstreifen und die Herstellung der Positive erfolgt auf getrennten Bildstreifen. Bei der Wiedergabe werden Ton und Bild von getrennten Bildstreifen abgerollt.

Dass das nicht unter das Patent 368 383 fällt, bedarf keiner Ausführung. Der Wortlaut der einstweiligen Verfügung, ob es nun so gemeint ist oder nicht, geht aber weiter. Und auf ausdrückliche briefliche Anfrage, ob die Antragstellerin keine Rechte aus der einstweiligen Verfügung herleitet, soweit Ton und Bild von getrennten Filmstreifen bei der Wiedergabe abrollen, ist die Erteilung einer Antwort abgelehnt worden.

Die Antragsgegnerin ist nicht eine Firma der Art, wie sie im gegnerischen Antrag zu charakterisieren versucht wird, sondern ist eine sehr ernste Industriefirma, deren verantwortliche Leiter Sicherheit haben müssen, dass das geschilderte, von ihnen bei der Herstellung von Bildtonfilmen bisher geübte Verfahren nicht von der einstweiligen Verfügung betroffen wird.

gez. Dr. Danziger

Rechtsanwalt.

Den etwa erforderlichen Stempel bitte ich zu den Gerichtskosten zu erfordern.

Prozeß-Vollmacht.

Den Herren Rechtsanwälten und Notaren

Dr. Georg Jac. Danziger
Dr. Richard Nünninghoff
in **Berlin W 10,** Margaretenstraße 8

erteile n wir hierdurch Vollmacht zur Führung des

von der Firma Tonbild-Syndikat Akt.-Ges. in Berlin, Jaegerstr. 6
Antragstellerin, Klägerin

uns

gegen

Antragsgegnerin, ~~Beklagte~~

wegen eins w. Verf. bei dem Land----- I Gericht zu Berlin

Aktenzeichen: 33 Q. 5.29 ~~anzustellenden~~ (angestellten) Rechtsstreites mit der besonderen Ermächtigung:

1. uns in den aus der Zwangsvollstreckung, insbesondere in Gemäßheit der §§ 731, 767, 768, 771, 785, 805, 878 ZPO. entstehenden Prozessen, sowie im Verfahren behufs Eröffnung des Konkurses über das Vermögen des Gegners, im Konkurse selbst und in den durch das Konkursverfahren entstehenden Rechtsstreitigkeiten zu vertreten;
2. dem zahlungspflichtigen Gegner Stundung zu gewähren;
3. von der Gegenpartei und aus der Konkursmasse den Streitgegenstand selbst, auch wenn sich derselbe bei der Hinterlegungsstelle befindet, in Empfang zu nehmen;
4. Aufrechnungserklärungen für uns abzugeben und entgegenzunehmen;
5. sechs Monate nach rechtskräftiger Entscheidung des Rechtsstreites die nicht abgehobenen Handakten zu vernichten;
6. für sämtliche Gebührenforderungen aus dieser Angelegenheit ist zuständig das gericht zu

Mehrere Bevollmächtigte sind samt und sonders zur Vertretung legitimiert.

Berlin, den 14 ten Februar 192 9.

Klangfilm Gesellschaft mit beschränkter Haftung

Form 305

1115

Theodor Kellmann
Rechtsanwalt und Notar
Berlin SW ...

Reichspatentamt

Aktenzeichen V 16 437 IX/37a 2

Patentnummer 368383

Berlin SW 61, den 20. 2. 1929.
Gitschiner Straße 97-103

An das Landgericht I

Aktenz. u. Name bei allen Eingaben ...
Für bargeldlose Zahlungen: Das Reichspatentamt hat
a) Reichsbank-Girokonto
b) Postscheckkonto: Berlin
c) Konto 20073 bei der Brandenburgischen Provinzialbank und Girozentrale, Berlin

Briefannahme des Landgerichts I
20 FEB 1929 • 12-15 d.
Amtsgerichts • Berlin-Mitte •

in Berlin C2.
Neue Friedrichstr. 16/17

338

Zur Sache Sonst. W. Lynd. Kal. / Klangfilm
(Geschäftszeichen) 33 a 5. 29/4

Auf das Schreiben vom 5. 2. 29 folgen anbei die Akten des Patents 368383 mit dem Ersuchen um Rückgabe nach gemachtem Gebrauche.

Falls die Sache ihren Abschluß durch ein Urteil findet, wird um abschriftliche Mitteilung desselben nach eingetretener Rechtskraft nebst den Akten des gerichtlichen Verfahrens ergebenst ersucht.

Anmeldeabteilung IX.
~~Prüfungsstelle für Klasse~~
J.A.
Jahn
Regierungs Prop.

~~Frei durch Ablösung~~
~~Reich~~

~~Einschreiben~~

Kop

Abtragen
gegen Empfangsschein.

Kop. Pat.77a.
IX.1927.500.

3216

Öffentliche Sitzung des Landgerichts I

16. Zivil — Kammer — ~~für Handelssachen.~~

Berlin, den 27 Februar 1929

In Sachen

Toubild v. Klangfilm

Gegenwärtig:

1. [illegible] Hamburger als Vorsitzender,

2. [illegible] Kopf

3. [illegible] als beisitzende Richter,

[illegible] als Urkundsbeamter der Geschäftsstelle.

erschien bei Aufruf

1. für die ~~Kläger~~ Antragstellerin der Rechtsanwalt Kallmann [illegible]

2. für die ~~Beklagte~~ Antragsgegnerin der Rechtsanwalt Dr. [illegible]

Der Anwalt der ~~Kläger~~ Antragstellerin verlas — ~~nahm Bezug auf~~ — den Antrag der ~~Klageschrift~~ Schriftsatzes vom 22.11.29

Der Anwalt der ~~Beklagten~~ Antragsgegnerin verlas — nahm Bezug auf — den Antrag des Schriftsatzes vom 14.2.1929, Bl. 20 d. A.

(o.A.)

P A d Anwälten

[illegible] 23/2 [illegible]

Die Anwälte verhandelten sodann zur Sache.

[illegible]

1/ Der Streitwert wird nach Anhörung der Parteien in Abänderung des Beschlusses vom 8.2.29 [illegible] auf 100 000 Rm festgesetzt.

2/ [illegible] am 1 März 1929 [illegible]

[illegible]

---

gef.25.2.29 Häsler
6 lg.Urt.-Ausf.=je 8 S.
2 k. " "

33.Q.S.29 [illegible]

L. G. I. Nr. 44 Mündliche Verhandlung — Landgericht —

Berlin [illegible]
Fernsprecher: Hasenheide 2118

Berlin, den 22. Februar 1929

25.4.29

In Sachen:

Tonbild gegen Klangfilm

-33.Q.5.29.-

Y. 1/3 I

beantrage ich:

den Widerspruch der Antragsgegnerin zurückzuweisen und den Beschluss vom 8.Februar cr zu bestätigen.

Der Rechtsanwalt
gez.Kallmann

An das
Landgericht I
B e r l i n
==========

Fernsprecher [illegible] Bergmann 2118 Beglaubigte Abschrift

Theodor Kallmann
Rechtsanwalt und Notar
Berlin SW.47, Yorckstr. [illegible]
Fernsprecher: Hasenheide 2118

Berlin, den 22. Februar 1929

In Sachen:

Tonbild gegen Klangfilm

-33.Q.5.29.-

beantrage ich:

den Widerspruch der Antragsgegnerin zurückzuweisen und den Beschluss vom 8.Februar cr zu bestätigen.

Der Rechtsanwalt:
gez.Kallmann

An das
Landgericht I
B e r l i n
===== ==========

Zwecks Zustellung beglaubigt
Berlin, den 22.Februar 29
Rechtsanwalt:
[signature]

Theodor Kallmann,
Rechtsanwalt und Notar,
Berlin SW. 68, Yorckstr. 76,
Fernsprecher: [illegible]

Berlin, den 22. Februar 1929.

S c h r i f t s a t z

in Sachen der Firma: Tonbild-Syndikat Aktiengesellschaft in Berlin, Jägerstrasse 6, vertreten durch ihren Vorstand, Dr. Hans Henkel und Arthur Fritschknecht,

Prozessbevollmächtigter: Rechtsanwalt Th. Kallmann, Berlin SW, Yorckstr. 76-

gegen

die Firma Klangfilm G.m.b.H. in Berlin, Askanischer Platz Nr. 4, vertreten durch ihre Geschäftsführer Dr. Kirn und Dr. Akomann.

Der Antrag auf Zurückweisung des Widerspruchs der Antragsgegnerin wird wie folgt begründet:

1. Der Beschluss des Landgerichts schliesst sich wortgetreu dem Patentanspruch 1 an. Im vorliegenden Fall durfte dies geschehen, weil damit gleichzeitig der konkrete Tatbestand getroffen wird, ohne jede Abweichung. Dies beweist die Veröffentlichung in den "Motion Pictures with Sound-Marvin", Seite 87.
2. Es ist aber auch nicht erforderlich, die Worte "auf einem Filmband" in den Beschluss einzuschalten, weil dadurch höchstens eine Unklarheit hineingetragen wird.

An das
Landgericht I,
B e r l i n .

Im Beschluss vom 8.Februar 1929 und ebenso im Patentanspruch 1 befindet sich die ausdrückliche Kennzeichnung, dass es sich um Positivfilme handelt, "welche Bildreihen und photo-

graphisch aufgenommene Tonschrift enthalten".

Damit ist deutlich gesagt, dass die Positivfilme sowohl die Bildreihen als auch Tonreihen enthalten sollen. Anderenfalls hätte anstelle des Und ein „Oder" stehen müssen.

Man wird dem Patentamt nicht vorwerfen können, dass es bei Fassung von Patentansprüchen nicht sorgfältig genug verfährt.

3. Durch die Einschaltung der Worte "auf einem Filmband" wird noch die weitere Gefahr einer Unklarheit nach der Richtung hin hervorgerufen, als ob die Antragsgegnerin aus dem Patent dadurch herauskäme, dass sie, den nach dem Patent hergestellten einheitlichen Positivfilm nachträglich zerschneidet und die beiden Teilstreifen synchronisiert vorführt.

Eine weitere Unklarheit wurde ebenfalls geschaffen bei Gelegenheit des üblichen Vorführungsverfahrens, bei welchem mehrere Posifilme hintereinander (also der Länge nach) aneinander geklebt werden, so dass nicht mehr ein Filmband vorhanden ist.

Der Beschluss vom 5. Februar 1929 ist sachgemäss formuliert und bedarf keiner Ergänzung oder Berichtigung.

Der Rechtsanwalt:

[signature]

1121

Empfangsbekenntnis.

4

Jn Sachen

Tonbild gegen Klangfilm

Geschäftsnummer: 33 Q 5. 29 7.1/3

habe ich die R. P. Akten 368383

zu treuen Händen

~~zurück~~erhalten.

Berlin, den 26. 2. 29

[illegible]

Zurückgelangt

28. Feb. 1929

Öffentliche Sitzung des Landgerichts I

Zivil-Kammer. 16.

Berlin, den 1. März 1929 19

Eingeg. dauf 8

In Sachen

Tonbild-Syndikat gegen Klangfilm

erschien bei Aufruf: niemand

~~1. für d Kläger~~

der Rechtsanwalt

2. für d Beklagte

der Rechtsanwalt

Der Anwalt de

beantragte Vertagung.

Der Gegner war einverstanden.

Es wurde der Beschluß verkündet:

Die Sache wird vertagt

~~auf den 19 vormittags Uhr.~~

Es wurde anliegendes Urteil verkündet.

Dr. Heyer

Leiß

Gegenwärtig:

1. L.G.R. Dr. Hamburger

als Vorsitzender

2. Ger. Ass. Dr. Pfeifer

3. " " Dr. Knapp

als beisitzende Richter,

Angest. Leiß

~~als Gerichtsschreiber~~

als Urkundsbeamter der Geschäftsstelle des Landgerichts I.

L.G.R. ~~Ger. Ass.~~ L.G.R. Dr. Hamburger

Nr. 41 Vertagung auf Antrag der Parteien — Landgericht.

33. A. 5. 29 / 5

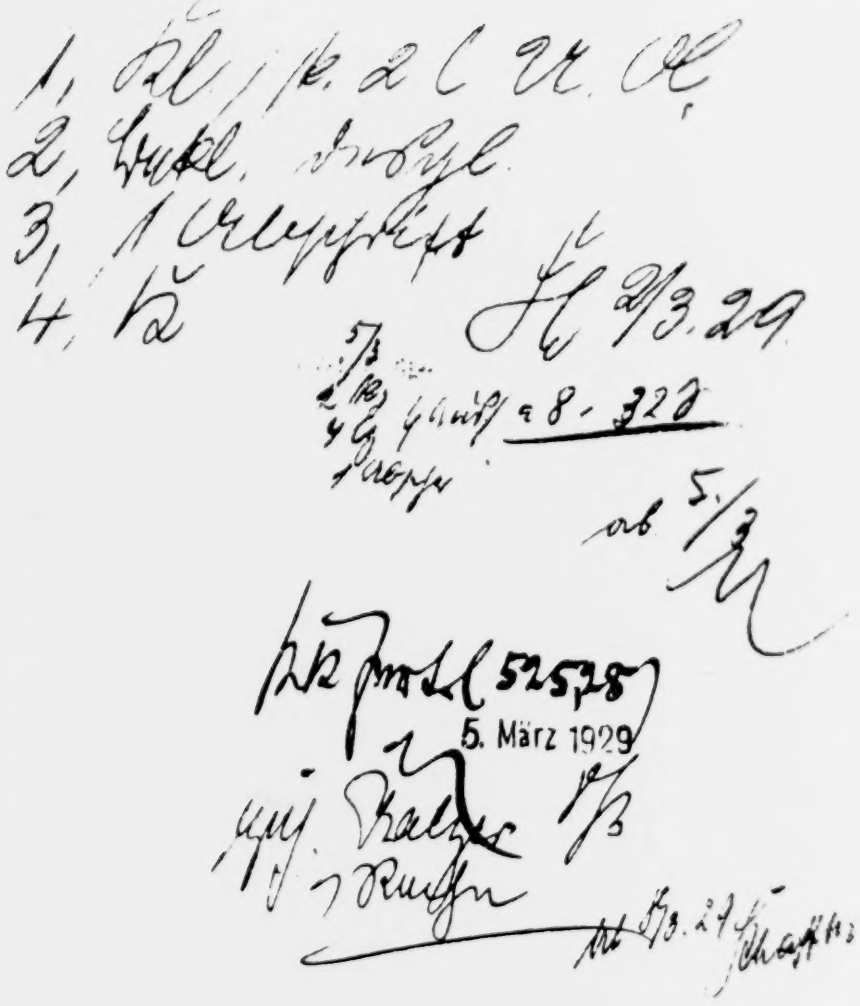

1, Kl. / k. 2 C U. Ol.
2, Dukl. Dusgl.
3, 1 Abschrift
4, K

H 2/3.29

5/3
2 Kl.
4 G.
1 Abschr.

4 Ausf. a 8 - 32 J

ab 5/3

[illegible] (525,28)
5. März 1929

[illegible] 8/3
1 Kuchen

ab 8/3.29 [illegible]

[illegible]: P. S. Berg[illegible]

33 Q 5.29

- 1. März 1929

IM NAMEN DES VOLKES !

Verkündet
am 1. März 1929
als Urkundsbeamter
der Geschäftsstelle.

In Sachen

der Firma TONBILD-SYNDIKAT Aktien-Gesellschaft
in Berlin, Jägerstrasse 6,
vertreten durch ihren Vorstand: Dr.Hans Henkel und
Arthur Frischknecht,

Antragstellerin,

-Prozessbevollmächtigter: Rechtsanwalt Theodor Kallmann in Berlin
SW 47, Yorkstrasse 76 -

gegen

die Firma KLANGFILM- G.m.b.H. in Berlin,
Askanischer-Platz 4,
vertreten durch ihre Geschäftsführer Dr.Kirn und Dr.Akemann,

Antragsgegnerin,

-Prozessbevollmächtigte: Rechtsanwälte Dr. Danziger und
Dr.Nünninghoff in Berlin W 10, Margaretenstrasse 8 -

wegen Patentstreits - Streitwert 100.000 RM -

hat die 16. Zivilkammer des LANDGERICHTS I in BERLIN
auf die mündliche Verhandlung vom 22. Februar 1929
unter Mitwirkung des Landgerichtsrats Dr. Hamburger,
des Amts- und Landrichters Kopf und des Gerichtsassessors Dr.Knapp
für Recht erkannt:

Die einstweilige Verfügung vom 8.Februar 1929
wird bestätigt und die Antragsgegnerin
verurteilt, auch die weiteren Kosten des
Verfahrens zu tragen.

Tatbestand:

5/33

T A T B E S T A N D

Die Antragstellerin ist Generallizenznehmerin des mit Wirkung vom 15.April 1921 erteilten DRP. 368 383, dessen Anspruch 1. lautet:

"Verfahren zum Herstellen von Positivfilmen, welche Bildreihen und photographisch aufgenommene Tonschrift enthalten, dadurch gekennzeichnet, dass die Negative getrennt entwickelt werden.

Auf die Patentschrift wird verwiesen.

Die Antrag-stellerin trug vor, die Antragsgegnerin sei im Begriff, am 8.Februar 1929 Tonbildfilme vorzuführen, die von der General Electric Comp (sogenannte Photophone-Filme) hergestellt seien. Die Herstellung dieser Filme erfolge, wie aus dem Buch "TRANSACTIONS OF THE SOCIETY OF MOTION PICTURE ENGINEERS" Seite 87 hervorgehe, in der Weise, dass der Tonfilm und der Druckfilm einzeln aufgenommen, entwickelt, dann zusammen in einer Kopiermaschine vereinigt würden, so dass eine kombinierte Kopie auf einen einzigen Film erzeugt werde. Dieses Verfahren falle unter das DRP. 368 383. Bei der jungen Entwicklung dieses Industriezweiges sei für die Antragstellerin eine besondere Gefahr durch solche Patentverletzungen gegeben.

Die Antragstellerin erwirkte auf Grund dieses Vortrages die einstweilige Verfügung vom 8.Februar 1929, durch welche der Antragsgegnerin verboten wurde, "ein Verfahren Herstellen von Positivfilmen, welche Bildreihen und photographisch aufgenommene Tonschrift enthalten, anzuwenden",

bei 5/34

bei welchem die Negative getrennt entwickelt werden. Die Antragsgegnerin legte gegen diese einstweilige Verfügung Widerspruch ein.

Die Antragstellerin beantragt:

die einstweilige Verfügung zu bestätigen.

Die Antragsgegnerin beantragt:

die einstweilige Verfügung insoweit aufzuheben, dass hinter dem Wort "welche" eingefügt würden die Worte: "auf einem Filmband".

Sie trägt vor, sie wolle vorerst die einstweilige Verfügung im übrigen nicht angreifen, jedoch sei die Formel unklar. Man könne zunächst meinen, dass sie nur Filme behandle, bei denen zugleich Ton- und Bildfilme enthalten seien. Indessen richte sich auch gegen Filme, welche nach der Begründung ihres Antrags gegen Herstellungen der Antragsgegnerin in Deutschland selbst. Diese aber würden so hergestellt, dass stets Ton und Bild sich auf getrennten Filmstreifen befänden, und zwar sowohl bei der Aufnahme als auch beim Entwickeln, Kopieren und Abrollen. Dieses Herstellungsverfahren dürfe durch die einstweilige Verfügung nicht verboten werden, zumal es durch die überreichte britische Patentschrift 105 589 bereits bekannt gegeben sei. Die Antragstellerin habe gleichwohl auf die Anfrage der Antragsgegnerin, ob sie Rechte aus der einstweiligen Verfügung gegen Tonfilme herleite, soweit Ton und Bild von getrennten Filmstreifen abrollten, keine befriedigende Antwort gegeben. Bei dieser

Sachlage

Sachlage sei es unbedingt notwendig, die Formel der einstweiligen Verfügung zu ändern.

Die Antragstellerin ist dem entgegengetreten.

Es wird im übrigen auf den vorgetragenen Inhalt der Schriftsätze und der zur Glaubhaftmachung überreichten Anlagen verwiesen.

E N T S C H E I D U N G S G R Ü N D E :

Die Antragsgegnerin bestreitet das Vorliegen eines Arrestgrundes nicht. Tatsächlich ist dieser auch gegeben, da gerade die Tonfilm-Industrie in starker Entwicklung ist und gerade jetzt Patentverletzungen der Antragstellerin unabsehbaren Schaden bringen könnten.

Ebenso kann an sich der Arrestanspruch nicht bestritten werden. Nach dem DRP. 368 383 ist es ~~an sich~~ von grossem Vorteil, die Tonschrift und die Bildreihe bei sprechenden Filmen auf einen gemeinsamen Träger, ein Filmband aufzubringen. Schwierigkeiten ergeben sich aber hierbei insofern, als bei der Aufnahme die Bildreihe über- oder unterbelichtet werden kann, während die Tonzeichenreihe stets normal belichtet ist. Diese Unterschiede lassen sich durch Entwickeln nicht ausgleichen. Der Erfinder setzte sich also die Aufgabe, diese Schwierigkeiten zu beheben und löst diese Aufgabe dadurch, dass die Negative getrennt entwickelt werden. Hierbei ist es gleichgültig, ob die Aufnahme schon getrennt erfolgt oder aber ob sie auf einem Film vorgenommen wird, der zum Entwickeln geteilt wird. Ebenso ist es gleichgültig, ob die Herstellung des

einheitlichen

einheitlichen Positivfilmes dadurch erfolgt, dass man die beiden Negativfilme nacheinander auf dem gleichen Positivfilm kopiert oder ob man die beiden Negativfilme vorher miteinander verklebt und nun die Kopie auf einmal vornimmt.

Hiernach erstreckt sich der Schutzbereich des Patents auf ein Verfahren zum Herstellen von Positivfilmen, welche sowohl Bildreihen als auch Tonschrift enthalten, bei welchen die Negative getrennt entwickelt werden. Auch der Stand der Technik steht dieser Auslegung nicht entgegen, soweit bisher von der Antragsgegnerin Material überbracht ist. Die britische Patentschrift 105 589 beschreibt ein Verfahren, bei welchem sowohl bei der Aufnahme wie beim Entwickeln und Kopieren getrennte Bild- und Tonfilme vorhanden sind. Auch das Abrollen der Filme erfolgt nach dieser Patentschrift in der Regel getrennt und unter synchroner Zusammenfassung. Lediglich Seite 6, Zeile 30 bis 32, ist die Möglichkeit erwähnt, die beiden Positivfilme nach der Kopie und vor dem Abrollen an den überhängenden Kanten zusammenzukleben, so dass tatsächlich ein Film da ist. Bis zum Stadium des Abrollens kennt jedenfalls diese Patentschrift keinen gemeinsamen Film.

Bei dieser Auslegung des Klagepatents besteht kein Zweifel, dass das Verfahren, welches die General Electric Comp. nach dem überreichten Artikel anwendet, unter das Klagepatent fällt, da bei diesem Verfahren die Filme zwar getrennt aufgenommen und entwickelt, aber bei der Kopie vereinigt werden, so dass also Positivfilme vorhanden sind,

<u>welche</u>

welche Bildreihen und Tonschriften enthalten, und bei denen die Negative getrennt entwickelt sind. Dieses Verfahren fällt klar unter dem Wortlaut des Patentanspruch so dass das diesem Anspruch entsprechende Verbot der einstweiligen Verfügung den Verletzungsfall klar beschreibt.

Die Antragstellerin meint, diese Fassung sei unklar, da hierunter auch Verfahren fallen könnten, bei denen Aufnahme, Entwicklung, Kopie und Abrollen auf getrenntem Filme erfolge. Dem kann nicht beigetreten werden. Die Antragstellerin selbst hat in der mündlichen Verhandlung erklärt, dass sie ein solches Verfahren nicht als unter das Patent fallend ansehe. Dies wäre auch nach dem Stande der Technik infolge der britischen Patentschrift 405 589 nicht möglich. Liest man aber den Wortlaut der einstweiligen Verfügung unbefangen, so fällt ein solches Verfahren auch nicht darunter, weil nach dieser immer Positivfilme, vorausgesetzt sind, welche Bildreihen und photographisch aufgenommene Tonschrift enthalten, d.h. jeder Film muss beides enthalten.

Die Antragstellerin stützt nun ~~selbst~~ ihr Verlangen auf Berichtigung des ~~Urteils~~ Tenors darauf, dass die Antragegnerin ihr keine befriedigende Antwort auf ihre Anfrage gegeben habe. Allein die Antragstellerin war hierbei durchaus im Recht, denn in der Anfrage der Antragsgegner die in der mündlichen Verhandlung verlesen ist, steht nicht das ganze Verfahren der Antragsgegnerin beschrieben, sondern es war nur angefragt, ob getrennt abrollende Filme unter das Verfahren fielen. Diese Anfrage konnte aber die

[illegible] Bergmann 21[illegible]

Antragstellerin nicht beantworten, da das getrennte Abrollen allein nicht genügt, um aus dem Patent herauszukommen, wenn in einem früheren Stadium des Verfahrens, etwa bei der Kopie, ein gemeinsamer Film vorhanden war, der zum Abrollen getrennt wird. Ein solches Verfahren würde, soweit der Standpunkt der Technik bisher zu übersehen ist, ebenfalls unter das Patent der Antragstellerin fallen. Infolgedessen konnte die Antragstellerin nach Lage der Sache vor näherer Klarstellung des Verfahrens der Antragsgegnerin keine befriedigende Antwort geben, ohne dass aus dieser Tatsache auf eine Unklarheit der einstweiligen Verfügung geschlossen werden dürfte.

Nun würde freilich der von der Antragsgegnerin gewünschte Zusatz in die einstweilige Verfügung aufgenommen werden können, wenn er geeignet wäre, die Klarheit der einstweiligen Verfügung zu verstärken und Zweifel im Zwangsvollstreckungsverfahren auszuschliessen. Das ist aber nicht der Fall. Gerade die von der Antragsgegnerin gewünschte Fassung kann zu Zweifeln führen. Wenn nämlich von Positivfilmen die Rede ist, die auf einem Filmband Ton- und Bildfilm enthalten, dann könnte man an das abrollende Filmband denken und infolgedessen bei getrennter Abrollung ohne weiteres annehmen, dass ein Verstoss gegen die einstweilige Verfügung nicht vorliegt. Dies ist aber, wie oben gezeigt, nicht unbedingt der Fall. Die von der Antragsgegnerin gewünschte Fassung kommt also nicht in Frage. Ebenso erscheint es nicht zweckmässig,

diese

diese Fassung zu wählen und durch einen weiteren Zusatz am Schluss der Formel ~~aber~~ bestimmte Ausnahmen zu machen, da dann die einstweilige Verfügung ~~keinem~~ kaum mehr ~~verpflichtet bliebe.~~ verständlich wäre. Es muss daher bei der bisherigen Verfügung sein Bewenden haben.

Wenn die Antragsgegnerin weiter vorträgt, dass die einstweilige Verfügung bereits zu irreführenden ~~Schadens~~ Zeitungsnachrichten geführt habe, so ist nach der Überzeugung des Gerichts nicht die Fassung der einstweiligen Verfügung schuld an derartigen Missverständnissen. Liest man die einstweilige Verfügung unbefangen, dann kann man ohne weiteres erkennen, was damit gemeint ist.

Über die Kosten entscheidet § 91 ZPO.

Dr. [signature] , [signature] , Dr. [signature]

Land gericht I

Gerichtsschreibereiabteilung ..... Geschäftsnummer: 33 Q 5

Kostenrechnung

in der Prozess- Sache Conti-Ld-Syndikat 1. Klangfilm

Laufende Nr.	Blatt der Akten- oder Geschäftsnummer	Gegenstand des Kostenansatzes	Wert des Gegenstandes RM	Zu erheben sind überhaupt RM	Pf.	Davon sind zu verrechnen als der Staatskasse verbleibende Gelder RM	Pf.	durchlaufende Gelder (Kostenregister Spalte) RM	Pf.	Bemerkungen
1	2	3	4	5		6		7		8
1.		Geb. gem. §§ 32, 8 Postzg.	100.000	580	—					Antragst. [illegible]
2.		Schreibgeb. 34 [illegible] 25 30 / 2. 32.		10	20					" " [illegible] 5,10
3		Porto hierf.		0	08					" "
				590	28					
	18	ab Vorsch.		65	—					
				525	28					

V. 38700 28

V

K. S.
Vordruck Nr. 4a. Kostenrechnung (§ 17 Abs. 1 Kass.-Ordn.).
Buchdruckerei Reinhold Kühn A.G., Berlin SW 68.

[illegible] 5. März 1929

Reichspatentamt. Berlin SW 61, den 8. 4. 1929
Gitschiner Straße 97-103.

Aktenzeichen: [illegible] sind bei allen Zu
Patentnummer: 368383 schriften anzugeben

betr. Sache: Tonbild-Syndikat
[illegible]

(Geschäftszeichen) 33 G 5 29

Es wird um Rücksendung der Akten des Reichspatentamts:

[illegible] ergebenst ersucht.

Anmeldeabteilung ~~Prüfungsstelle für Klasse~~

J A

Kop.
Kop. Pat.78a.
VII.1927.1000.

Regierungs-Inspektor

Theodor Kallmann
Rechtsanwalt und Notar
Berlin SW. 47, Yorckstr. 76
Fernsprecher: Hasenheide 2118
Jetzt Fernsprecher: F. 5. Bergmann 2118

Berlin, den 12. April 1929

13 H

In Sachen

Tonbild-Syndikat ./. Klangfilm

33.Q.5.29.

7

1) U. v. 1/3.29 O.31 zug. 7/3.;
N.Zg. v. 19/4. Um 8-Zah

2) Im Kosteninteresse geprüft!
Weglegen, aufzubewahren bis 19 35.
Berlin, den 13. Apr. 1929
[signature]
Justiz – ~~ober~~ – inspektor – ~~sekretär~~.

Überreiche ich ergebenst Urteil vom 1. März 29 mit Zustellungsurkunde vom 7. März 29 mit dem Antrage:

Das Rechtskraftattest erteilen zu wollen.

Der Rechtsanwalt
[signature]

An das
Landgericht I
Berlin

Theodor Kallmann
Rechtsanwalt und Notar
Berlin [illegible]
[illegible]
Fernsprecher: F. 5. Bergmann 2118

Berlin, den 30. April 1929

In Sachen

Tonbild-Syndikat ./. Klangfilm

33. Q. 5. 29.

bitte ich ergebenst die Gerichtskosten abrechnen zu wollen.

Jede Partei trägt die Hälfte der Gerichtskosten.

Ich bitte um eine Abschrift der Abrechnung.

Der Rechtsanwalt

Kallmann

Zu antworten, daß mir gegen [illegible] der Antragstellerin 65.08 RM und von der Antragsgegnerin 525,28 RM Gerichtskosten erforderlich worden sind.

Berlin, den 1. Mai 1929

[illegible]

An das
Landgericht I
Berlin
16. Zivilkammer

Theodor [illegible]
Recht[illegible]
Berlin SW. [illegible] [illegible]str. 76

Berlin, den 12. August 1929

13 [illegible]

In Sachen

Tonbild-Syndikat ./. Klangfilm

33. O.5. 29.

ist mit dem Antrage vom 5. Feb 1929 ein Buch

Transaktion 31

als Anlage 3 überreicht worden.

Ich bitte um Rückgabe dieses Buc an die Büroangestellte.

Der Rechtsanwalt
gez. Kallmann
vertreten durch seinen
Generalsubstituten:
[illegible]
Referendar.

An das
[illegible]ndgericht I
Berlin
16. Zivilkammer

1137

Bescheinigung

In Sachen

Tonbild-Syndikat ./. Klangfilm

33. Q. 5. 29.

Ich bestätige den Empfang des Buches

Transaktion 31.

Berlin, den 13. August 1929

Eingeschlossen
Dt 15. 8 29
Kirsch.

[illegible]
als Generalsubstitut des
Rechtsanwalt [illegible]

Beglaubigt

Tobien, Justizsekretär

als Urkundsbeamter der Geschäftsstelle
des Landgerichts I.

Vorstehende Unterschrift des Justizsekretärs Tobien als Urkundsbeamten der Geschäftsstelle Abteilung 33 des Landgerichts I Berlin wird mit dem Bemerken beglaubigt, daß derselbe zur Ausstellung der Urkunde befugt ist.

Berlin, den 19. November 1932.
Der Präsident des Landgerichts I.

Berlin

80 RM. Beglaub. Geb. bezahlt.
Berlin d. 19. NOV 32
Geschäftsstelle L. G. I.
Verwaltungsabt.
Freimert,
Justizinspektor

I 22/2839

7

German Reich, City of Berlin,
Consulate General of the United States of America. } ss:

I, JOHN F. STONE Vice Consul of the United States of America at Berlin, Germany, duly commissioned and qualified, do hereby certify that Foelling whose true signature and official seal are, respectively, subscribed and affixed to the foregoing instrument, was at the time of subscribing the same the president of the Russian Landgericht, at Berlin German Reich, duly commissioned and by law authorized to execute such acts, and that his signature and official seal affixed thereto are genuine, and as such are entitled to full faith and credit.

IN WITNESS WHEREOF I have hereunto set my hand and the seal of the Consulate General at Berlin, Germany, this 22nd day of November 1932.

John F. Stone

Vice Consul of the United States of America.

SERVICE No. 06925

$2.[illegible] 8.48

3418

Defendant's Exhibit S.

Theodor Kallmann
Attorney at Law and Notary
Berlin, SW. 47, Yorckstrasse 75
Telephone: Hasenheide 2118

Berlin, February 6, 1929

To State (Superior) Court I
16th Civil Chamber
Berlin

3419

In the Matter of:

Tonbild Syndikat Aktien Ges.

vs.

Klangfilm G. m. b. H.

I respectfully transmit the annexed motion for issuance of a preliminary injunction and request, in view of the fact that the tone-picture film presentation which is objected to is to take place, as has been attested, on Friday, the 8th inst. at 12 o'clock, the speediest decision on this motion.

3420

For service by the bailiff I shall require a time of one hour.

The attorney:
(Sd.) Kallmann

(Notations)

ORDER

With omission of formal phraseology, it is ordered by way of preliminary injunction, with-

Defendant's Exhibit 8. 3421

out oral hearing, in accordance with §§ 936 ff. of the Code of Civil Procedure:

(1) The defendant is * * * (wording of motion indicated by square brackets on pages 6 to 7 of the papers).

(2) The defendant shall bear the costs of the proceeding.

(3) The value involved in the litigation amounts to 10,000 RM. 3422

Berlin, February 8, 1929
State (Superior) Court I, Civil Chamber 16

(Sd.) Dr. Schumann, Dr. Heyne, Dr. Pfeifer

33.Q.5.29

Order received. I waive formal service.

3423

Berlin, February 8, 1929.

(Signature)

3424 *Defendant's Exhibit S.*

Theodor Kallmann
Attorney-at-Law and Notary
Berlin, SW. 47, Yorckstrasse 75
Telephone: Hasenheide 2118
New Telephone No.: F. 5 Bergmann 2118

Berlin, February 5, 1929.

To State (Superior) Court I
16th Civil Chamber
Berlin

3425

MOTION

For the granting of a preliminary injunction to the Tonbild-Syndikat Aktien-Gesellschaft, of Berlin, Jägerstrasse 6, represented by its Board of Directors, Dr. Hans Henkel and Arthur Frischknecht,

Petitioner,

Counsel: Attorney-at-law. Th. Kallmann, of Berlin SW 47, Yorkstrasse 76,

3426

vs.

the Klangfilm G. m. b. H., of Berlin, Askanischer Platz 4, represented by its business managers Dr. Kirn and Dr. Ackemann,

Defendant.

I.

The plaintiff is a corporation which has been formed on the basis of a merger of the former Triergon-Aktiengesellschaft, the Deutsche Ton-

 3427

film-Aktiengesellschaft, the Küchenmeister group and the Mester group, in short, of all authoritative concerns in Germany which have for years been engaged in the creation of tone films.

There have, therefore, been vested in the plaintiff concern at the time of its establishment all essential German patents and protection rights or the exclusive license thereto, for the field of the tone-picture film.

The capital stock of the petitioner amounts to 12 millions.

3428 The defendant was established several weeks ago.

II.

The petitioner is the owner of the exclusive license to German patent 368,383 (Annex 1).

A copy of the agreement and an affirmation in lieu of oath regarding the exclusive license are enclosed in Annex 2.

Patent claim 1, on which the following motion is based, reads as follows:

3429 "Process for the production of positive films which contain series of pictures and photographically recorded tone record, characterized by the fact that the negatives are developed separately."

The specification of the patent is so readily intelligible that for the sake of avoidance of repetitions it will suffice to refer to it.

III.

The defendant was established only a few weeks ago, to be sure, but is manifestly endeav-

3430 *Defendant's Exhibit S.*

oring to deprive the petitioner of its business in Germany as rapidly as possible. It is probably well known to the Court that the creation of the tone-picture film in Germany is just coming into existence and that considerable sums, amounting to millions, have already been expended in the past by the interested parties which have merged to form the plaintiff company, sums, which are only now to attain an economically serviceable fruition.

3431 A disturbance of this branch of industry which is just in course of development would accordingly find the petitioner extremely sensitive precisely at the present stage.

The defendant has announced to a considerable number of interested parties that on Friday, February 8 of this year and on the subsequent days it will present tone-picture films. It has informed these interested parties that these tone-picture films which it is the intention to present will be in particular those of the General Electric Company (Photophone films).

3432 This is attested by the affirmation in lieu of oath of the confidential clerk, Dr. Hans Böhm.

These Photophone films of the General Electric Company are, however, produced by the process of the plaintiff's patent No. 368,383, *i. e.* the negatives have been developed separately.

This is attested by the volume, submitted herewith, of Transactions of the Society of Motion Picture Engineers, page 87.

In this volume the manufacture of the films according to the process of the General Electric Co. has been described. It is immediately evident that the process here described corre-

3433

sponds word for word to the process patented in Germany.

For the sake of proper procedure there is annexed hereto a complete translation of page 87, so that the Court may have the possibility of verification without further ado.

Accordingly the products which are being produced in the United States by this process represent an infringement of German patent No. 368,383 as soon as they cross the German border.

3434

IV.

The petitioner objects to the defendant's action in now presenting American patent-infringing products to the interested parties, who in the present field represent the same group, in order to obtain publicity for the defendant and to influence its list of customers, which is also that of the petitioner, to the latter's detriment.

The petitioner is satisfied to restrict the following motion to the contents of the patent. To be sure, it is the intention to hit not only the 3435
American films of the General-Electric Company, if the latter are presented here in Germany by the defendant, but also such films as the defendant may have produced in Germany by this means, that tone negatives and picture negatives are developed separately.

V.

The urgency is self-evident in view of the situation set forth above It is probably a mat-

3436 *Defendant's Exhibit S.*

ter of judicial knowledge that this entire branch of industry is in course of development.

Nor would the petitioner be able to prove subsequently which interested parties had been lost to it as a result of the illegal presentations of the defendant. It must therefore take precautions that this damage, which cannot be recouped subsequently, shall be avoided in advance.

In view of the fact that the presentation is to
3437 take place as early as Friday of this week, it is requested that the decision be reached without an oral hearing with sufficient promptness that it can still be served upon the defendant.

The petitioner does not intend by any means to prevent, with the following motion, the presentation of tone-picture films which have been developed in some other manner than by the process of manufacture described in Patent 368,383.

VI.

3438

As attorney for the petitioner I accordingly move:

> The defendant is forbidden, under penalty of a fine of unlimited amount, to be fixed by the Court, or imprisonment for not to exceed six months for each case of infraction, to employ within the territory of Germany a process for the manufacture of positive films which contain series of pictures and a photographically recorded tone record, which process is characterized by the fact

Defendant's Exhibit S. 3439

that the negatives are developed separately, and to offer for sale, present or use the films produced by such a process.

In view of the urgency and importance of preliminary adjustment I declare the value involved in litigation, in accordance with my instructions, to be 100,000 marks.

The attorney
(Sd.) KALLMAN.

3440

LIST OF ANNEXES.

1. Patent No. 368,383.
2. Affirmation in lieu of oath by Mr. Ehrenhaft, Dipl. Eng.
3. Volume of Transactions.
4. German translation of page 87.
5. Affirmation in lieu of oath by Kallina.
6. Power of attorney for the lawsuit.
7. Affirmation in lieu of oath by Dr. Böhm. 3441

I request that any tax stamp that may be required be charged with the Court Costs.

POWER OF ATTORNEY FOR LAWSUIT

We hereby grant to the attorney-at-law Th. Kallmann, of Berlin, Yorkstrasse 76, power of attorney for prosecution of the litigation to be brought before State (Superior) Court I in

3442 *Defendant's Exhibit S.*

Berlin by us as plaintiffs against Klangfilm G. m. b. H. as defendants, for the principal action and a preliminary injunction, with the special authorization:

1. To represent us in the proceedings arising from compulsory execution, particularly in conformity with §§ 731, 767, 768, 771, 785, 805, 878 of the Code of Civil Procedure, as well as in the proceeding with a view to initiation of bankruptcy as to the property of the opposing par-
3443 ty, in the bankruptcy itself, and in the litigation arising from the bankruptcy proceeding;

2. To grant an extension of time to the opposing party if responsible for payment;

3. To receive from the opposing party and from the bankrupt estate the object of the litigation itself, even if the latter is at the place of deposit;

4. To furnish and to accept statements of charges for (us);

3444 5. To destroy, six months after legally valid decision of the lawsuit, the reference files which have not been called for;

6. To charge for the copies prepared on demand, in addition to the lump sum for expenses provided for by §76 of the Regulation relating to fees.

Berlin, February 6, 1929

Tonbild-Syndikat
Aktiengesellschaft
(Sd.) Arthur Frischknecht, H. Henkel.

Defendant's Exhibit S. 3445

AFFIRMATION IN LIEU OF OATH

I am the manager of the patent division of the Tonbild-Syndikat-Aktiengesellschaft, of Berlin, Jägerstrasse 6.

I know from personal knowledge that by the agreement of August 30, 1928 the exclusive general license for patent No. 368,383 was granted to the Tonbild-Syndikat-A. G. (Tobis). In the agreement it is stated, word for word, that there is accorded to the Tobis "an exclusive 3446
general license, unrestricted as to time, place, quality or quantity" to the rights which constitute the object of the agreement.

Among the countries there are then excepted the United States of America, Canada, Mexico and the North American Colonies.

In § 2 of the agreement it is further stated, word for word: "Tobis shall have the right, within the scope of the general license, to exercise, positively and in defense, in its own name and at its own expense, all patent rights."

3447

I affim the above in lieu of oath:

Berlin, February 6, 1929.
(Sd.) Jarruz (?) Ehrenhaft

AFFIRMATION IN LIEU OF OATH

I affirm the following in lieu of oath:

I am confidential clerk of the Tonbild-Syndikat-Aktiengesellschaft.

3448 *Defendant's Exhibit S.*

In the course of the last few days several film experts have informed me that in the Universum Motion Picture Theatre at Lehniner Platz presentations in which tone picture films were shown have repeatedly taken place on the part of the Klangfilm G. m. b. H.

The men of the Klangfilm G. m. b. H. had stated, it was said, that among other things there were involved, in particular, tone-picture films which had been produced by the American
3449 process of the R. C. A. Photophones (General Electric Company).

The General Electric process is described in the volume Transactions of the Society of Motion Picture Engineers, volume XII, no. 33, of April, 1928, on page 87.

At the moment I should prefer not to mention the names of these informants, because they are also in business relations with us and because under certain circumstances this might prove detrimental to my own concern.

Berlin, February 6, 1929
3450 (Sd.) Dr. Hans Böhm

INVITATION.

The Klangfilm G. m. b. H. of Berlin has the honor to invite you to the presentation which is to take place on Friday, February 8, 1929 at 12 o'clock noon in the

Ufa-Theatre Universum, Lehniner-Platz

There will be produced: tone-picture films, picture films with synchronized musical accompani-

ment, as well as sound-review and review of the week, furthermore, specimens of overtures and intervening music.

Berlin, SW. 11, Askanisher-Platz 4
Klangfilm G. m. b. H.

I herewith affirm, in lieu of oath, that the above transcript was copied by me verbatim.

Berlin, February 6, 1929.

(Sd.) Marg. Kallina

3452

TRANSLATION.

Of Page 87 of "Motion Pictures with Sound—Marvin."

The experience of the General Electric Company in the development of high quality loudspeakers had been utilized and it is believed that the present form represents the best obtainable at the present time. Reverberation in the room in which the sound is reproduced may, of course, affect the results and should be treated 3453
in each individual installation.

Another form of disturbance, while it is not properly called distortion, should be mentioned. This is the presence of extraneous noises, such as sprocket hum, mechanical vibration noises, radio interference, etc.

The major points in the problem of development of the system have been outlined. No attempt will be made here to discuss in detail the solution of the above problems. A fairly comprehensive knowledge of the characteristics of the process has been obtained in the laboratory

3454 *Defendant's Exhibit S.*

and steady progress is being made toward the complete elimination of the faults. Thus the thirty years handicap confronting those who are working on the addition of sounds to the motion picture is being overcome.

The system which is to be demonstrated may be outlined as follows: pictures made with a standard camera driven at constant speed result in a picture negative of the same size as in the present art. The sound negative is photo-
3455 graphed on a separate positive film moving in synchronism with the camera film. The two films are separately developed each to its own proper density, then combined in a printing machine to produce a combination print on a single film. The shape of the picture positive is maintained but the size is made slightly smaller to accommodate the sound record.

Theodor Kallmann
Attorney-at-Law and Notary
Berlin, SW. 47, Yorckstrasse 75
3456 Telephone: Hasenheide 2118
New Telephone No.: F. 5. Bergmann 2118

Berlin, February 8, 1929.

To State (Superior) I
16th Civil Chamber, Berlin

Very Urgent!

In the matter of:
Tonbild-Syndikat A. G.

vs.

Klangfilm G. m. b. H.

I submit the original of a letter of the firm of S. Klein (Logos Film) to my party.

Defendant's Exhibit S.

The contents of this letter show very unequivocally that the Klangfilm G. m. b. H. offers the manufacture of tone picture films which have been developed in accordance with the petitioner's patent, No. 368,383.

The Attorney:
(Sd.) Kallmann

3458

S. Klein
Logos, Kultur und Spielfilm G. m. b. H.
SW. 48, Friedrichstrasse 236

Berlin, February 7, 1929
Nürnbergerstrasse 6

Tonbild-Syndikat Aktiengesellschaft
Berlin W. 8,
Jägerstrasse, 6.

3459

With reference to the negotiations carried on with you some time ago with regard to the manufacture of advertising films, you promised to notify me in case of the possibility of production. In the meantime I have learned that your production has already progressed to such a point that our negotiations can be put into more concrete shape. I therefore request you to inform me whether I can count on the production of films within a reasonable time.

Since I have not heard from you for a long time, I have also communicated with the Klangfilm G. m. b. H. and I shall, of course, also enlist this system in competition in carrying out my

3460 *Defendant's Exhibit S.*

program. What is in any case decisive for me is the question by which system the cost of production is lower. As I was told at the Klangfilm Gesellschaft, it is necessary to figure on double the expense in case of recording by their system, because the recording of the tones and of the pictures is effected upon separate films which have to be developed separately and can be copied upon a common positive film only subsequently.

3461 I now ask you whether this double expense arises in your recording process also. For me it would naturally be of great importance if, for reasons of economy, the recordings could be made at once upon a common film and if the latter could then be multiplied in an ordinary copying machine. Please be so kind as to inform me on this point and at the same time also please quote me your prices for reproducing instruments, which must be as portable as possible. Kindly inform me also whether you are now in a position to supply me with a recording apparatus or on what terms you could place one at my

3462 disposal temporarily.

In expectation of an early reply from you, I beg to remain

Respectfully yours,

(Sd.) S. KLEIN

Defendant's Exhibit S. 3463

L. G. 29

State (Superior Court I, Berlin)

File No.: 33.Q.5.29

Computation of Costs

In the matter of Tonbild-Syndikat vs. Klangfilm.

Serial No.	Sheet of the Record	Object of the Charge of Costs	Value of the Object RM.	Total to be Collected RM. Rpf.	Remarks
1		Fee for the proceeding § 32, No. 1 of the Law relating to Court Costs	10,000	65 —	The defendant is responsible after service
2		Postage herefor		0 08	
			Total	65.08	

3464

Debtor: Berlin, February 11, 1929 3465
The Petitioner (Sd.) Meyer
Judicial Inspector

3466 *Defendant's Exhibit S.*

Attorneys-at-Law and Notaries
Dr. Danziger
Dr. Nunninghoff
Berlin W 10

Margeretenstrasse 8
Tel.: Nollendorf 1596/97

Berlin, February 15, 1929

Very Urgent!

3467 To State (Superior) Court 1
Berlin

In the matter of:
Tonbild vs. Klangfilm
33.Q.5.29

We submit enclosed herewith an opposition and summons.

In view of the fact that the preliminary injunction was granted by the Court in the course of a few hours without oral hearing, it is prob-
3468 ably a dictate of compensatory justice that, in view of the effects of the preliminary injunction, it is necessary to set the date for a hearing on the opposition as early as possible.

It is requested that the date of hearing be set for the next trial day, the 19th inst., and that the time of summons be shortened to 24 hours.

(Sd.) Dr. Nunninghoff
Attorney-at-Law

Defendant's Exhibit S. 3469

Court Copy

Attorney-at-Law and Notaries
Dr. Danziger
Dr. Nunninghoff
Berlin W 10
Margaretenstrasse 8
Tel.: Nollendorf 1596/97

Time of Service, 24 hours
Date of Hearing; Feb. 22, 1929, 12 o'clock in the Court House in the Grunerstrasse, 2nd Floor Rooms 16-18. 3470
Berlin, February 15, 1929
State (Superior) Court 1, 16th Civil Chamber
The presiding justice
(Sd.) Dr. Sch.

Berlin, February 14, 1929.

To State (Superior) Court 1 Berlin

Objection

In the matter of the Tonbild-Syndikat Atkiengesellschaft, of Berlin, Jägerstrasse 6, presented by its Board of Directors Dr. Hans Henkel and Dr. Arthur Frischknecht 3471

Counsel: Attorney-at-law Th. Kallmann, Berlin SW 47, Yorkstrasse 76—

vs.

The Klangfilm G.m.b.H., of Berlin, Askanischer Platz 4, represented by its business managers Dr. Kirn and Dr. Akemann.

— 33.Q.5.29 —

We submit herewith power of attorney of the defendant and we file an objection to the order

3472 *Defendant's Exhibit S.*

of February 8, 1929 of State (Superior) Court 1, Berlin, with the motion.

> That the preliminary injunction of February 8, 1929 be set aside to this extent that the words "upon *one* film strip" be inserted after the word "which".

For an oral hearing on this objection we summon the petitioner before the court to which it has applied, through its counsel, attorney-at-law Th. Kallmann, Berlin SW 47, Yorckstrasse 76,
3473 on the date to be set by the presiding justice, with the demand that any objections and evidence be communicated to the Court and to the undersigned counsel in a pleading.

Statement of Grounds

The present objection is at the moment directed against the preliminary injunction only insofar as is expressed in the above motion.

If one reads the motion for February 5, 1929 and the annexed translation of page 87 of Motion Pictures, one at first gets the impression
3474 that the motion is directed against a process of manufacture in which the tone film and the picture film are developed separately but a combined positive is then produced from both of them upon a single film.

At the end of IV of the statement of grounds of the motion there occurs the first obscurity, inasmuch as it is there stated that the motion is intended to be directed also against films which may possibly be manufactured by the defendant in Germany and in which the tone negative and the picture negative are developed separately. Here there is lacking the characteristic feature

Defendant's Exhibit S. 3475

of the union of the separately developed films upon *one* film.

The distinctive feature is likewise lacking in the motion. And it is also lacking in the order which had been granted.

The films which the defendant has manufactured in Germany are produced in this way, that the tone and picture are always situated upon separate film strips. The recording of the tone and of the picture is effected upon separate picture strips, the development is effected upon separate picture strips and the production of the 3476
positives is effected upon separate picture strips. In the reproduction the tone and the picture are unreeled from separate picture strips.

That this does not come under Patent 638,383 requires no detailed explanation. But the wording of the preliminary injunction, whether it is so intended or not, goes further and in response to an explicit inquiry by letter as to whether the petitioner does not derive any rights from the preliminary injunction insofar as the tone and the picture unreel from *separate* film strips in 3477
the reproduction, the giving of a reply was declined.

The defendant is not a concern of the kind which it has been the endeavor to characterize in the motion of the other side, but is a very serious industrial concern whose responsible heads must have an assurance that the process described, which has hitherto been employed by them in the manufacture of picture tone films, is not affected by the preliminary injunction.

(Sd.) Dr. Danziger
Attorney-at-Law

3478 *Defendant's Exhibit S.*

I request that any tax stamp that may be required be charged with the Court costs.

Power of Attorney for Lawsuit

We hereby grant to the attorneys-at-law and notaries Dr. Georg Jac. Danziger, Dr. Richard Nünninghoff, of Berlin W. 10, Margaretenstrasse 8, power of attorney for prosecution of the litigation brought before State (Superior) Court 1 in Berlin, File No. 33.Q.5.29, by the Tonbild-Syndikat Akt.-Ges., of Berlin, Jägerstrasse 6, as
3479 petitioner, against us as defendants, for a preliminary injunction, with the special authorization:

1. To represent us in the proceedings arising from compulsory execution, particularly in conformity with §§ 731, 727, 768, 771, 785, 805, 878 of the Code of Civil Procedure, as well as in the proceeding with a view to initiation of bankruptcy as to the property of the opposing party, in the bankruptcy itself, and in the litigation arising from the bankruptcy proceeding;

3480 2. To grant an extension of time to the opposing party if responsible for payment;

3. To receive from the opposing party and from the bankrupt estate the object of the litigation itself, even if the latter is at the place of deposit;

4. To furnish and to accept statements of charges for us;

5. To destroy, six months after legally valid decision of the lawsuit, the reference files which have not been called for;

Defendant's Exhibit S. 3481

6. For all demands of fees arising from this matter there shall have jurisdiction . . . court . . . at . . .

Several holders of power of attorney are authorized to act as representatives individually and collectively.

Berlin, February 14, 1929

(Sd.) Klangfilm Gesellschaft mit beschränkter Haftung 3482
Kirn Akemann

National Patent Office

File No.: V.16437 IX/57a²
Patent No.: 368,383

Berlin SW. 61, Feb. 20, 1929
Gitshiner Strasse 97-103

3483

To State (Superior) Court 1
Neue Friedrichstrasse 16-17
Berlin C. 2

Re Tonbild-Syndikat vs. Klangfilm
(File No.) 33.Q.5.29

In response to the letter of February 5, 1929 there is enclosed herewith the file wrapper of Patent 368,383, with the request for return after use has been made thereof.

In case the matter reaches a conclusion through a decision, it is requested that a transcript there-

3484 *Defendant's Exhibit S.*

of be supplied after it becomes legally effective, together with the record of the judicial proceeding.

Application Division IX
By Authority
(Sd.) Government Inspector

By Messenger
In return for receipt

3485

Public Session of State (Superior) Court I
16th Civil Chamber

Berlin, February 22, 1929

Present:

1. Justizrat Dr. Hamburger
As Presiding Justice,

2. District and State Judge Kopf,

3. Judicial Assessor Dr. Knapp
3486 As Associate Justices,

The Court Official Zeiss
As Document Clerk of the Clerk's Office

In the matter of:
Tonbild vs. Klangfilm

there appeared, when the case was called:

1. For the Petitioner, attorney-at-law Kallmann, together with attorney-at-law Meltau, Dipl. Eng. Ehrenhaft, and attorney-at-law Prof. Dr. Isay.

Defendant's Exhibit S. 3487

2. For the Defendant, attorney-at-law Dr. Danziger and Privy Councillor Prof. Dr. Nernst.

The attorney for the petitioner read aloud the motion of the pleading of February 22, 1929.

The attorney for the defendant read aloud the motion of the pleading of February 14, 1929, sheet 20 of the record.

The attorneys then argued the case.

1. After the parties were heard, the value involved in the litigation was, in modification of 3488
the order of February 8, 1929, fixed differently at 100,000 RM.

2. Date set for decision, March 1, 1929, 12 o'clock.

(Sd.) Dr. Hamburger Zeiss

Drawn up February 25, 1929. Hösler
6 long transcripts of the decision, = 8 pages each.
2 Brief " "
3489

33.Q.5.29.

3490 *Defendant's Exhibit S.*

Theodor Kallmann
Attorney-at-Law and Notary
Berlin, SW. 47, Yorckstrasse 75
Telephone: Hasenheide 2118

Berlin, February 22, 1929.

To State (Superior) Court I
Berlin

In the matter of:
Tonbild vs. Klangfilm
3491 - 33.Q.25.29. -

I make the motion that the objection of the defendant be dismissed and that the order of February 8, of the present year, be confirmed.

The Attorney:
(Sd.) Kallmann

Verified for the purpose of service.
Berlin, February 22, 1929.
The Attorney:
3492 (Sd.) Kallmann

Theodor Kallmann
Attorney-at-Law and Notary
Berlin, SW. 47, Yorckstrasse 75
Telephone: Bergmann 2118

Berlin, February 22, 1929

Pleading

In the matter of: The Tonbild-Syndikat Aktiengesellschaft of Berlin, Jägerstrasse 6, represent-

 3493

ed by its Board of Directors, Dr. Hans Henkel and Arthur Frischknecht.

Counsel: Attorney-at-law Th. Kallmann, of Berlin SW. Yorckstrasse 76

vs.

the Klangfilm G. m. b. H., of Berlin, Askanischer Platz No. 4, represented by its business managers D. Kirn and Dr. Akemann.

3494

The motion for dismissal of the objection of the defendant is justified as follows:

1. The Order of the State (Superior) Court adheres word for word to patent claim 1. In the present case this could be done without any deviation, because the concrete situation is thereby correctly dealt with at the same time. This is proved by the publication in "Motion Pictures with Sound, Marvin", page 87.

2. It is, however, not necessary either, to in- 3495
sert the words "upon one film strip" in the Order, because at best an obscurity is introduced thereby.

In the Order of February 8, 1929 and likewise in patent claim 1 there is the explicit characterization that what is involved is positive films "which contain series of pictures *and* photographically recorded film record."

That distinctly expresses the idea that the positive films are to contain *both* the picture series *and* the tone series. If such were not the case there would have to be an "or" instead of an "and".

3496 *Defendant's Exhibit S.*

The Patent Office probably cannot be criticized on the ground that it does not proceed with sufficient care in the wording of patent claims.

3. By the insertion of the words "on one film strip" there is further produced the additional danger of obscurity due to the implication that the defendant was evading the patent by subsequently cutting up the unitary positive film produced according to the patent and was reproducing the two partial strips in synchronized form.

3497 A further obscurity would likewise be created on the occasion of the ordinary reproducing process in which several positive films are pasted to one another in succession (i. e. lengthwise), so that one film strip is no longer present.

The order of February 8, 1929 is properly formulated and requires no completion or correction.

The attorney:
(Sd.) Kallmann

3498 *Receipt*

In the matter of:
Tonbild vs. Klangfilm

File No.: 33.Q.5.29 7.1/3

I have duly received the file wrapper of patent 368,383.

Berlin, February 26, 1929
(Signature)

Received back.
February 28, 1929.
Z.

Defendant's Exhibit S. 3499

Public Session of State (Superior) Court I
16th Civil Chamber

Berlin, March 1, 1929

Present:

1. Justizrat Dr. Hamburger
as Presiding Justice,

2. Court Assessor Dr. Pfeifer

3. Court Assessor Dr. Knapp
as Associate Justices,

The Court Official Zeiss 3500
as Document Clerk of the Clerk's Office
of State (Superior) Court I.

In the matter of:
Tonbild-Syndikat vs. Klangfilm.

There appeared, when the case was called, nobody.
The annexed decision was handed down.

(Sd.) Dr. Hamburger

Zeiss

Wording of the decision by Justizrat Dr. Hamburger 3501

33.Q.5.29/5

(The following sheet contains manuscript notations regarding transcripts of the record.)

(The following 8 pages contain the decision confirming the preliminary injunction of February 8, 1929. A translation of this decision forms a part of Plaintiff's Exhibit 34.)

3502 *Defendant's Exhibit S.*

(The following sheet contains the computation of Court costs.)

National Patent Office

File No.: V.16,431 IX/57a²
Patent No.: 368,383
Must be given on all communications.

Berlin SW. 61, April 8, 1929
Gitschiner Strasse 97-103

3503 Re: Tonbild-Syndikat vs. Klangfilm

File No.: 33.Q.5.29

The return of the files of the National Patent Office is hereby requested.

Application Division IX
By Authority
(Signature)
Government Inspector.

Theodor Kallmann
3504 Attorney-at-Law and Notary
Berlin, SW. 47, Yorckstrasse 75
Telephone: Hasenheide 2118
New Telephone No.: F. 5. Bergmann 2118

Berlin, April 12, 1923

To State (Superior) Court I
Berlin

In the matter of:
Tonbild-Syndikat vs. Klangfilm
33.Q.5.29

I respectfully submit the decision of March 1, 1929 with certificate of service of March 7, 1929,

3505

with the motion that the attestation of legal validity be issued.

The attorney:
(Sd.) Kallmann

(Notation)

1. Decision of March 1, 1929; served March 7; etc.

2. Examined with a view to costs.
To be filed and preserved until 1935. 3506
Berlin, April 13, 1929.
(Signature)
Judicial Inspector.

Theodor Kallmann
Attorney-at-Law and Notary
Berlin, SW. 47, Yorckstrasse 75
Telephone: Hasenheide 2118
New Telephone No.: F. 5. Bergmann 2118

3507

Berlin, April 30, 1929

To State (Superior) Court I
16th Civil Chamber
Berlin

In the matter of:
Tonbild-Syndikat vs. Klangfilm
33.Q.5.29

I request that the court costs be computed.
Each party is to bear one-half of the court costs.

3508 *Defendant's Exhibit S.*

I request a transcript of the computation.

The attorney:
(Sd.) Kallmann

(Notation)

Reply that altogether 65.08 RM. has been demanded from the petitioner and 525.28 RM. in Court costs from the defendant.

Berlin, May 1, 1929

3509 (Sd.) Müller

Theodor Kallmann
Attorney-at-Law and Notary
Berlin, SW. 47, Yorckstrasse 75

Berlin, August 10, 1929

To State (Superior) Court I
16th Civil Chamber
Berlin

In the matter of:
Tonbild-Syndikat vs. Klangfilm
3510 33.Q.5.29

With the motion of February 5, 1929 a book

Transaction 31

was submitted as Annex 3.

I request the return of this book to the clerical employee.

The attorney
(Sd.) Kallmann
Represented by his general substitute
(Sd.) Dr. Wilhelm . . .

Defendant's Exhibit S. 3511

Certificate

In the matter of:
Tonbild-Syndikat v. Klangfilm
33.Q.5.29

I acknowledge receipt of the volume

Transaction 31

Berlin, August 13, 1929

3512

(Sd.) Dr. Wilhelm . . .
As general substitute of Attorney-at-Law
Kallmann

(Notation)

Received
Berlin, Aug. 15, 1929
(Sd.) Kirsch

3513

Authenticated

(Sd.) Tobien, Court Clerk
As Document Official of the Clerk's
Office of State (Superior) Court I

(SEAL)

The foregoing signature of Court Clerk Tobien as Document Official of the Clerk's Office, Division 33, of State (Superior) Court I in Ber-

3514 *Defendant's Exhibit S.*

lin is authenticated with the observation that he is duly authorized to issue the document.

Berlin, November 19, 1932

The President of State (Superior) Court I
(Signature)

(Seal of the President
of Prussian Superior
Court I, Berlin)

3515

Authentification fee of 80 RM. paid.

Berlin, November 19, 1932.

Clerk's Office of State (Superior) Court I.
Administration Division.
(Signature)
Judicial Inspector
1 22/2839

3516

3517

Opinion, Campbell, D. J.

UNITED STATES DISTRICT COURT,

EASTERN DISTRICT OF NEW YORK.

AMERICAN TRI-ERGON CORPORATION, Plaintiff, vs. PARAMOUNT PUBLIX CORPORATION, Defendant.	Equity 5800. August 14, 1933.

3518

WARD, CROSBY & NEAL, Solicitors for Plaintiff; S. MORTIMER WARD, JR. and PAGE S. HASELTON, of Counsel.

CHARLES NEAVE, HENRY R. ASHTON, W. J. BARNES, F. T. WOODWARD, and E. J. DRISCOLL, Counsel for Defendant.

3519

CAMPBELL, D. J.:

Plaintiff brings this suit against the defendant for relief by injunction and damages for the alleged infringement by the defendant, at its studio in Long Island City, of patent No. 1,825,598, issued to Vogt, Massolle and Engl, by mesne assignments to the plaintiff, for Process of Producing Combined Sound and Picture Films, granted September 29, 1931, on application filed March 29, 1922, corresponding to German Application No. V. 16431 VI/57 a2, filed April 14, 1921. This has been held by the Patent Office to be the

3520 *Opinion, Campbell, D. J.*

effective date under the International Convention.

No evidence was offered showing any commercial activity of the plaintiff, or of any one operating under license from it.

The defendant is a well known motion picture producer.

This suit is being defended by Electrical Research Products, Inc., the wholly owned subsidiary of the Western Electric Company, formed to take over the commercial distribution of the
3521 Western Electric talking motion picture sound recording and reproducing systems which were developed by the research laboratories of the Western Electric and American Telephone & Telegraph Companies.

The defendant is licensed by the Research Products, Inc. to record for talking pictures by means of the Western Electric system, and has from the beginning used that system and apparatus.

The defendant has by answer interposed the
3522 defenses of invalidity and non-infringement.

This suit is based on claims 5 to 9, both inclusive, and claim 11 of the patent in suit, but claims 6 and 7 are to be read with the Disclaimer, filed November 23, 1932.

Said claims and disclaimer read as follows:

> "5. A process for producing a combined sound and picture positive film, for talking moving pictures, comprising, photographing a sequence of pictures on one length of film, and simultaneously photographing on another length of film a corresponding sequence of sounds accompanying the action, separate-

ly developing the two negatives in a manner appropriate for each, and printing the sound and picture negative respectively upon different longitudinally extending portions of the same sensitized film, to form the sound sequence at one side of and along the picture sequence.

6. A process for producing a combined sound and picture positive film, for talking moving pictures, comprising, photographing a sequence of pictures on one length of film, 3524 and simultaneously photographing on another length of film a corresponding sequence of sounds accompanying the action, so that the picture and sound negatives may be separately developed in a manner appropriate for each, and printing the sound and picture negatives respectively upon different longitudinally extending portions of the same sensitized film, to form the sound sequence at one side of and along the picture sequence.

7. A process for producing a combined 3525 sound and picture positive film, for talking moving pictures, comprising, photographing a sequence of pictures on one length of film, and simultaneously photographing on another length of film a corresponding sequence of sounds accompanying the action, so that the picture and sound negatives may be separately developed in a manner appropriate for each, and printing the sound and picture negatives respectively upon the same face of the same sensitized film at different longitudinally extending portions thereof, to form

3526 *Opinion, Campbell, D. J.*

the sound sequence at one side of and along the picture sequence.

8. The method of producing a talking moving picture record on a single film which comprises photographing simultaneously upon separate films the picture and the sound to form separate negatives, photographing said negative picture record upon a portion of a sensitized film not exposed to a sound record, and photographing the negative
3527 sound record on the same face of said last film and at a portion thereof not exposed to the picture record.

9. The method of producing a talking moving picture record on a single film which comprises photographing simultaneously upon separate films the picture and the sound to form separate negatives, photographing said negative picture record upon a portion of a sensitized film not exposed to a sound record, and photographing the negative
3528 sound record on the same face of said last film and at a portion thereof not exposed to the picture record, said last two photographing steps being performed consecutively."

"11. A process for producing a combined sound and picture postive film, for talking moving pictures, comprising, photographing a sequence of pictures on one length of film, and simultaneously photographing on another length of film a corresponding sequence of sounds accompanying the action, separately developing the records of said two

lengths of film in a manner appropriate for each, and printing such developed sound and picture records respectively upon different longitudinally extending portions of a single sensitized film, to form the sound sequence at one side of and along the picture sequence."

"DISCLAIMER

To the Hon. Commissioner of Patents:

Your petitioner, American Tri-Ergon Corporation, a corporation organized and existing under the laws of the State of New York and having a place of business in the City, County and State of New York, represents that in the matter of certain improvements in Process for Producing Combined Sound and Picture Films, for which Letters Patent of the United States No. 1,825,598 were granted on September 29, 1931 to said American Tri-Ergon Corporation, as assignee by mesne assignments of the inventors, Hans Vogt, Joseph Massolle and Josef Engl, said corporation is the owner of the entire right, title and interest under an assignment dated June 6, 1930 and recorded in the Transfers of Patents of the United States Patent Office, July 3, 1930, Liber T 144, pages 192 to 199, and other assignments referred to in said assignment, and that your petitioner has reason to believe that through inadvertence and without any fraudulent or deceptive intention, the specification and claim of said

3532 *Opinion, Campbell, D. J.*

Letters Patent are too broad, including that of which said inventors were not the first inventors. Your petitioner therefore hereby enters this disclaimer to that part of the claim which it does not choose to claim or hold by virtue of the patent or said assignments, to wit:

(a) The process as set forth in claim 6, except wherein the picture and sound negatives are separate films at the time of development.

3533

(b) The process as set forth in claim 7, except wherein the sequence of pictures is photographed upon a film separate from that upon which the sequence of sounds is photographed, and the picture and sound negatives are separately developed, in a manner appropriate for each, and are consecutively printed upon the same sensitized film."

3534 More than nine years elapsed between the date of the filing of the application in question in the United States Patent Office and the date of the granting of the patent in suit and the claims in suit were introduced by amendment dated July 15, 1931.

During that long period of time the defendant and the Western Electric, its parent company, engaged extensively in the commercial distribution of said Western Electric talking motion picture sound recording and reproducing systems.

At the time of the application in the United States Patent Office for the patent in suit in 1932, it was common and necessary practice in

the motion picture industry to compensate, so far as was possible, for over and under exposure of different scenes or takes of motion pictures by under and over development, respectively, of the picture negatives.

This was accomplished by what was known as the rack and tank development, in which each scene was wound on a rack and then submerged in a tank containing the developer, the development being watch by the operator, who from time to time lifted the rack and film from the 3536
tank, and exercising his individual judgment, determined the extent to which the development of the particular scene should be carried.

This, of course, resulted in merely a compromise, inasmuch as no amount of manipulation would make it right, if the exposure was not correct in the first place, but would merely change the degree in which it was not correct.

In recording sound photographically the negative sound record, it was realized, would be uniformally, if not correctly or normally, exposed (a uniform source of light being used) and, therefore, should receive a uniform development 3537
throughout.

To continue the practice of compensating in the developing of the pictures for under and over exposure of the pictures, the patentees wished to develop their picture records separately from their sound records.

This the patentees described in their specifications as originally filed in the United States, in 1922, as follows:

> "In the production of speaking films it is of great advantage especially from the point

3538 *Opinion, Campbell, D. J.*

of view of use, to arrange the sound sequence and the picture sequence upon one and the same material carrier (film).

"In this procedure, however, there frequently occur in consequence of the changing lighting conditions in the cinematographing process, changes in the degree of light and the bromide of silver layer, and this causes the picture sequence to be either overlighted or underlighted.

3539 "As the same film, however, bears close to the picture sequence the continuously normally lighted sound sequences, these differences cannot be removed in the case of combined negatives, by devolping, weakening, strengthening, and so forth. They can only be removed by subjecting the underlighted or the overlighted negative places to separate corresponding treatment.

"Technically, this treatment is practically impossible so long as the two sequences are photographed upon the same film."

3540 Further such original specification says:

"According to the present invention the difficulty is overcome by either employing entirely separate films for the production of the negatives, or films which are connected during the photographing, but which are separated from one another before the developing."

The difficulty which the patentees were seeking to overcome was under and over exposure of the different picture scenes, which they proposed

to do by developing the negative picture records separately from the negative sound record.

The alleged invention cannot be considered as broadly, for having the picture and sound records on different films, so that they are separately developed, as that was old and there would be no invention.

The paragraph of the specifications last quoted proposes two ways of obtaining the separate negatives, (1) to record sound and picture films on separate films in the first instance, (2) to separate the two records after recording them on the same film. This is shown on the drawings added by amendment. 3542

Fig. 1 shows sound and picture records recorded on separate films of standard width. Fig. 3 shows two negative records recorded on a wide non-standard film, having three rows of sprocket perforations, and which are severed at either p or u before development. Fig. 2 shows a wide non-standard positive print produced by printing the separate or separated negative records preferably consecutively on the same film.

The specifications states that the two negatives of Fig. 1 or the separated negatives of Fig. 3 may be united or pasted together prior to the printing and then copied "in the usual manner." 3543

In the separate film process of Fig. 1, there are three or four steps depending on whether the two records are or are not pasted together before printing, namely, (1) exposing, (2) developing, and (3) printing, and if the two records are pasted together before printing, that constitutes the fourth step.

In the divided film process of Fig. 3, which is claimed in claim 2, there are four or five steps,

3544 *Opinion, Campbell, D. J.*

depending on whether the divided or separated negatives are or are not pasted together or reunited before printing; but this process needs no further consideration as it is not in suit.

The claims in suit may be divided into two groups, namely, (1) claims 8 and 9, which are two-step claims for exposing and printing; (2) claims 5, 6, 7 and 11, which are three-step claims, the additional step being the developing, claims 6 and 7 being read with the disclaimer.

3545 The specification further states:

> "The synchronism is assured in both cases by the perforations and by corresponding marks. The production of the positive films can take place by copying the two negative films preferably consecutively upon the same positive films.
>
> "One can, however, also unite, previously, the two negative films longitudinally together, and then copy this so united negative in the usual manner."

3546 Nowhere in their said original specification or claims did the patentees state or even suggest that it was at all material that the two negatives be printed on the same side or face of the positive film.

Plaintiff's expert says that he finds it by inference which he gets from the specification, and prior practice on this point.

I cannot agree with him.

The most that the patentees in the specification say is that it is desirable to "arrange" the two records "upon one and the same material carrier (film)"; that the production of the posi-

tive films can take place by copying the two negative films preferably consecutively upon the same positive films"; and, in original claim 1, that the two records are "copied upon single film".

The idea of recording sound on film, of recording pictures on film, or both sound and pictures on the same film, of recording sound and pictures on separate films so as to be able to develop them separately and then project them together, or of printing sound and pictures from separate negatives upon a single film, were separately and collectively old prior to the conception date of either party, neither of which goes back of 1921. 3548

See Greensfelder patent No. 1,254,684, which disclosed everything but simultaneously recording; DeForest patent No. 1,446,246.

It is true that Greensfelder recorded his sound record after he took his pictures, instead of doing it at the same time.

There was, however, no novelty in simultaneous recording, as this was old. For example, see Bullis patent No. 1,335,651, and Craig patent No. 1,260,337. 3549

The plaintiff urges that defendant cannot with good grace contest patentability, in view of the application of Wente, a research engineer of the Western Electric Company, to which he assigned such application; but this contention was not sustained. Wente did make broad claims as is customary, but those broad claims were cancelled on the first amendment, and as I believe on Greensfelder rather than on the Vogt British patent. In any event, claims similar to some of the Wente claims so cancelled were made by Craig, in 1913, and cancelled as unpatentable at that time.

3550 *Opinion, Campbell, D. J.*

The claims of the patent granted to Wente are limited, and I do not see how his application prejudices the defense in this action.

The plaintiff's expert stated on cross-examination that what he thought was new in the patent in suit, and not found in the prior art, was printing both the separately exposed, separately developed negatives side by side, on the same side of the positive film.

On re-direct examination he stated that in addition to what he had previously stated was
3551 new over the prior art, was the process of simultaneously recording the sound and picture record, and in printing them side by side on different longitudinally extended portions of the same positive film, without regard to whether they are separately developed or not.

The original specifications were amended to state that the separate development step might be eliminated.

This amendment invalidated the two-step claims, as a separate development to overcome
3552 under and over exposure of the different picture scenes was the most important part of the disclosure, and by its elimination the invention claimed therein was different and broader than the one disclosed by the patentees in their application as filed.

It was old and well known in the art to have both the picture sequence and sound sequence printed side by side on a positive film, and also to put the sound record beside the picture record on a single film.

Walker patent No. 1,168,717 discloses that the picture negative and sound negative were put

on different longitudinally extending portions of the positive film at different times.

Craig patent No. 1,260,337 discloses in the negative process recording of sound negatives and picture negatives on separate films, and the two negative films developed separately and printed on opposite sides of one film.

The patentees filed their first application for the alleged invention in Germany, on April 15, 1921, and thereafter within the convention period they filed their application in the United States on March 29, 1922, and their British application 3554 on April 11, 1922, all three being substantially identical including their claims. The original claim 1 was for the two-step process of developing and printing, specifying that the two records are developed separately, but not whether made on one or two films, and then printed on a single film. Claim 2 was limited to these two steps by reference back to claim 1, and added the third step of exposing or photographing the two records on separate films. Claim 3 was limited to the two steps of claim 1 and added two additional steps, namely, the photographing on a 3555 single film, and the subsequent dividing of that film for separate development. Claim 4 refers back to the several steps of each of the three preceding claims, and adds to the several steps of each, the step of reuniting the two negatives before printing.

The application of the patentees in each of the three countries was therefore for a patent for their separate film process.

Defendant offered in evidence the file-wrappers and contents of the German Patent Office,

3556 *Opinion, Campbell, D. J.*

and the British Patent Office, but I can find no authority for their reception other than to show what was the application originally filed, and the patent that was granted.

The German patent issued to the patentees was published on February 2, 1923.

There was offered in evidence the German patent No. 279,598, of 1914, to Reimer, which specifically claimed:

3557

> "Process for the making of a film which consists of an image band and a sound band having the distinctive feature that each band is made as an individual separately, and that both hands are thereupon combined with each other."

This appears to exhaust any novelty as a process in the patentees' separate film process.

Defendant also offered in evidence the British specification offered to public inspection by the British Patent Office on April 15, 1922, four days after it was filed. This was admissible to show
3558 the application that was filed.

Defendant also offered in evidence British patent No. 178,442, as printed and placed on sale at the British Patent Office on December 7, 1922. Between April 15, 1922, the time of filing, and December 7, 1922, when the application was printed and placed on sale, the fourth paragraph of the specification was changed by substituting the following:

> "The process for the production of combined sound picture films hereinafter set forth differs from previous attempts in this

direction, chiefly in the perfect synchronization of the sound and picture sequences, whilst permitting of the separate development of the respective negatives necessitated by unavoidable variations in the lighting of the films during the initial exposure.

"Attempts have been made to attain the end in view by taking the two negatives separately and independently and subsequently combining the records for reproduction; but it is found impossible to secure full synchronization in this manner. 3560

"It has also been proposed to pass two separate films for the picture and sound records respectively, the film being driven positively and simultaneously by passing over the same sprocket wheel through a talking apparatus and to provide means for producing a series of corresponding identification marks upon the films by aid of which the two films after separate development can be reassembled; but this process also lacks the requisite accuracy of register.

"According to the present invention, the difficulty is overcome by employing films for the production of the negatives which are integral during the photographing, but which are separated from one another before developing. 3561

"After development, these two negative films are reunited and are copied upon the same positive film. In this way, the absolute coincidence of the sound and the picture record, respectively, is assured, whilst the needful difference in treatment can be given during the development."

3562 *Opinion, Campbell, D. J.*

The patent was published with only one claim, as follows:

> "Improved process for the production of combined sound and picture records, in which the sound record and the picture record are produced simultaneously on a single film, which is then divided and the two parts developed separately, and afterwards reunited and used to print the single positive record."

3563

This brings us to the United States application.

On April 14, 1922, the day before the British application was opened to the public, the United States Patent Office Examiner acted on the application, and cited the Bullis patent No. 1,335,-651.

On November 25, 1922, shortly before the revamped British patent was published, the patentees cancelled all the original claims of the United States application, and inserted a single
3564 claim which was identical with the single claim of the British patent, *supra.*

This action, it seems to me, must have been taken in view of the Bullis patent.

No drawing was filed with the original application, but by amendment a drawing was filed on November 25, 1922.

The defendant frequently referred to counsel's arguments and statements during the progress of the patent through the Patent Office, but these are not admissible to show estoppel, and therefore I have not considered them.

The new claims were specifically limited to the divided film process.

The actions of the patentees on their applications in Great Britain and the United States seem to me to be susceptible of only one interpretation, and that is, that they are intended to and did abandon the alleged invention covered by the claims in suit.

On April 19, 1923, after the British Patent was issued, the Examiner in the United States Patent Office rejected the single claim, stating: 3566

> "The claim is rejected as not involving invention over Bullis of record. It does not involve invention to make the record on a single film instead of on two films rigidly attached together, especially in view of the fact that the single film is afterwards cut apart as the parts of the united film are taken apart."

The patentees by amendment acquiesced in the rejection and cancelled their single process claim without reservation of any kind, and inserted 3567 in the amendment two product claims, requiring in each claim one homogeneous film band, on which the sound records and picture records are copied, the first claim being for a composite print produced from separate films, and the second claim for a composite print produced from a cut or divided single film.

The Examiner, on October 15, 1923, rejected claim 1 upon the prior Craig patent, No. 1,260,-337, which he held "shows a film on which two separate negatives are copied". He further

3568 *Opinion, Campbell, D. J.*

said, "Claims 1 and 2 are rejected as defining an article by the process of making it. In order that claims of this character may be allowed, it is necessary that the article have physical characteristics which an article made in the old way would not have. This is not true in this case."

The Examiner further said:

> "Claim 1 is required to be cancelled. In
> 3569 response to the requirement for division contained in the Office Action of April 14, 1922, applicant elected the form in which the records were made on a single film and then cut apart. He cannot now claim the species in which they are now made on two separate films."

No further action was taken for nearly a year.

In the interim plaintiff's present counsel were retained to prosecute the application which they continued during the remaining seven years.

They interviewed the Examiner and on Sep-
3570 tember 29, 1924, filed an amendment containing two process claims the obvious purpose of which, it seems to me, was to recapture the process which had been abandoned.

On January 26, 1925, the Examiner rejected both claims, citing Greensfelder patent No. 1,254,684, and also the abandoned British specification No. 157,751, filed by the patentees of the patent in suit, and corresponding to French patent No. 532,750.

The applicants on April 2, 1925, by amendment added as claims 3 and 4, claims 1 and 3 of

patent No. 1,489,314, to DeForest, which had issued a year before, and requested an interference.

On April 6, 1925, the Examiner again rejected the claims on their merits, and said:

> "Claims 1 and 2 are rejected on Craig, 1,260,337 in view of Greensfelder, 1,254,684, both of record. It is shown to be old in Craig to take separate synchronous sound and picture records simultaneously, and to then reproduce these two records on a single record strip. Applicant desires to reprint both records on one side only; but this is the teaching of Greensfelder. Note page 3, line 128, to page 4, line 8." 3572

The Examiner was the same Examiner who had granted the DeForest patent, and he further said:

> "Claims 3 and 4 are rejected as not based on the disclosure of applicant. Applicant takes a sound record and a picture record 3573 and reproduces these two records on a third film. These claims, however, call for a sound record and a picture record as does applicant, but the claims then define that the sound record is reproduced on the original picture record strip which is not the method of applicant. If, however, it requires that a positive of the sound record be made and a reprint of this be taken on the original picture strip, still it would not be the method outlined by applicant in his specification.

3574 *Opinion, Campbell, D. J.*

> The steps are clearly not the same. Referring to the case of the patentee, the reference Craig cited in this action was held not to be a reference against the claims here under consideration, and though the steps in the method of applicant and of Craig are the same, yet the claims of patentee were held patentable over Craig. Therefore, it is evident that applicant cannot make the claims of the patentee as applicant does not disclose such a method in his application."

3575

On April 23, 1925, the patentees filed another amendment.

On April 27, 1925, the Examiner allowed the divided claim, but finally rejected claim 1 and claims 3 and 4 of the two DeForest claims.

From this action an appeal was taken to the Examiners in Chief.

Under the rule of the Patent Office no question of patentability or invention could be considered in connection with the DeForest claims, because those claims were taken from an issued

3576 patent and the Examiners did not find a clear anticipation.

Having decided that the patentees could make the DeForest claims, the Examiners under the rule rendered a perfunctory decision as to the patentability of the other appealed claim which was more limited by specifying the separate development step, and said:

> "The Examiner allowed these claims, which is evidence of their patentability, notwithstanding that the Greensfelder patent

3577

was prior art, and which shows the printing of the two positives side by side, Fig. 5, as does also the Craig patent as above set forth. Greensfelder does not photograph his negative simultaneously. While the disclosure in these patents may tend toward a possibility of doubt as to invention being involved in the process defined by claim 1, the grant of the patent to DeForest and the lack of clear anticipation in either of the references or in their combination as to the addition or substitution of features in one not shown in the other and involving the question of invention vs. mechanical skill, we are of the opinion that claim 1 should be allowed in the absence of more pertinent and anticipatory art and appellants allowed to be placed in interference with DeForest to determine the question of priority."

3578

The interference was decided on the merits in favor of the patentees by the Examiner of Interferences and also by the Board of Appeals, and an appeal was then taken to the Court of Customs and Patent Appeals, in which last named court, on the argument, counsel for DeForest in effect conceded priority to the patentees, and the decision of the Board of Appeals was affirmed.

3579

I have not considered the arguments or briefs on the interference, as I am not satisfied that they are admissible.

The intereference with the DeForest claims should not have been allowed. Those claims were for a different process than that disclosed by the

3580 *Opinion, Campbell, D. J.*

patentees. This appears to me to have been conceded by plaintiff's counsel in his opening statement on this trial.

Those claims could never have dominated the patent in suit, for if so broadly construed they would not have been sustained over the Craig patent, No. 1,260,337, as the claims themselves read on the Craig patent, if the limitation to the additional rephotographing step is not given its intended meaning.

3581 What DeForest taught and the meaning of the claims clearly appears from the specification of his patent, and that was, instead of printing his sound and picture records directly onto a positive film, as in the patent in suit, DeForest introduced the separate and distinct additional step, namely, a photographing or rephotographing of the sound record onto the original picture negative to obtain "a more exact and faithful photograph containing any details of the finest light variations produced by sound waves". DeForest preferred to make the original sound

3582 record larger in size than could be accommodated with the pictures on the positive film, and to reduce its size by the additional photographing step.

Except for the interference which was sought on behalf of the patentees and was not forced on them by DeForest, I am convinced that the patent in suit would not have been granted with the claims in suit, and it is worthy of note that the only claims in suit which state that the two records are printed on the same side or face of the film, a point on which plaintiff lays great stress, are claims 7, 8 and 9.

By the amendment of July 15, 1931, the al-

leged invention of the patent in suit was broadened to eliminate the separate development step, the most important part of the original disclosure, and to disclose the different two-step process of exposing and printing.

Claims 8 and 9 as I have hereinbefore pointed out are invalid, as they are for a different alleged invention than the original. *Motion Picture Patents Co.* v. *Independent M. P. Co.,* 200 Fed. 411.

The only other two-step claims in suit, 6 and 7, were by the Disclaimer limited to the third step of separate development. 3584

Further, the two-step claims in suit and the broadening amendments were not inserted until July 15, 1931, and that was long after the process had gone into public use, and such an attempt should be regarded by the Courts with disfavor. *Railway Co.* v. *Sayles,* 97 U. S. 554, 563.

Plaintiff contends that it made a two-step claim as early as July, 1925, which was when it found the DeForest patent, but even then it was new matter and was not accompanied by the broadening amendments to the specification inserted July 15, 1931. 3585

The alleged invention of the claims in suit is a process and not an article or product.

A process consists of certain steps or operations in which the invention, if any, must reside. *Cochrane* v. *Deener,* 94 U. S. 780; *Walker,* 6th Edition, Sec. 19.

The patent in suit is entitled, "Process for Producing Combined Sound and Picture Films". It is merely an example of composite or combination printing, a term applied to the making on a single piece of photographic sensitive material

3586 *Opinion, Campbell, D. J.*

prints or impressions from two or more separate negatives, which is very old.

No photographic operation is involved which was not employed in the old art of composite printing which involved both simultaneous and consecutive exposure of separate negatives, separate development of those negatives in an appropriate manner and with different lengths of development, and both simultaneous and consecutive printing of the separate negatives on a
3587 single positive film; and was used in both black and white and color photography, and in both still and motion pictures, long before any date important here.

The patentees made no contribution to the art of photography.

Before 1900, sound was recorded photographically.

Photographic recording of sound with motion pictures and producing a combined sound and picture film, the same as the film in use today, is described in Haines British patent No. 18,057,
3588 of 1906.

The composite printing process of the patent in suit for sound pictures was adopted as the need arose and was used by Craig as early as 1913.

The Craig patent No. 1,260,337 discloses simultaneous recording of sound and pictures on separate films, which are developed separately and printed consecutively on the same positive film, and also shows in Fig. 8 a plurality of sound records printed side by side on the same side of his positive film.

I disagree with plaintiff and agree with defendant's expert Jones, that the Craig patent was operative.

3589

The Craig patent as I view it, although this is now disputed by plaintiff, anticipates any invention in the process defined in the claims in suit. It is true that Craig printed his sound record on the opposite rather than on the same side of the single positive film, but printing sound and picture records on the same side of the film was well known in the art at that time, and Craig's specification shows that he contemplated printing the sound record on the same side of the film as the pictures, as he says therein:

3590

> "It will be noted from what has gone before that so far the negative of the sound record and the negative of the picture record have been made upon separate strips or films. It is necessary, therefore, that these two negatives should be photographically printed upon one film or upon opposite sides thereof."

Even if the patent was silent on that point, the patentees cannot base their monopoly upon the printing of the sound and picture negatives on the same side of the film, which was old and well known and was not even mentioned in the patentees' original specification.

3591

What the patentees were concerned with was the separate development then required for different portions of the picture negative.

The Greensfelder patent No. 1,254,684 disclosed, as I understand it, although this is now denied by the plaintiff, everything in the claims in suit but simultaneous recording.

It cannot be distinguished on the ground that it teaches nothing regarding the recording of

3592 *Opinion, Campbell, D. J.*

acoustic vibrations. It discloses photographing of the sound in the sense of photographically producing a sound record, and a picture record, each on separate films, and then printing both on different portions of the same film.

Simultaneous recording of pictures and sounds was obvious and universal practice, and was disclosed in the Craig patent No. 1,260,337.

Separate development was old and well known in the art, and Craig and Greensfelder separate-
3593 ly recorded records would of necessity be separately developed.

Again I disagree with the plaintiff, as it seems to me that the Bullis patent No. 1,335,651 disclosed everything in the claims in suit but printing the simultaneous and separately developed negatives on a single homogeneous film. His apparent preference was for producing his single positive film, by first printing from his negatives, and then joining them together.

This, however, does not seem to me to be sufficient to relieve the claims in suit from anticipa-
3594 tion, as it was old in the art to print on the same film simultaneously and separately developed negatives.

No reason has been shown nor have I found any why it is impossible for the Bullis patent and the Craig patent No. 1,260,337 to be combined together to anticipate the claims in suit; therefore, I disagree with plaintiff's contention that they cannot be so combined together.

The Bullis construction is not impractical.

The Bullis patent was cited by the Examiner early in the prosecution of the patent in suit and, as it seems to me, resulted in the cancellation of the original claims.

3595

From that time on, however, it was undoubtedly lost sight of, and was not called to the attention of the Eaminers in Chief, and while as plaintiff contends it may have been in the file, yet no reference was made to it by them, and as I consider it a most pertinent reference, it seems to me that the failure to cite it against the claims as finally allowed deprives the patent in suit of the presumption of validity over the prior art.

Walker patent No. 1,186,717, which is for a combined camera and recorder, was not cited in the Patent Office in the prosecution of the patent in suit, but was a pertinent reference. It discloses the consecutive printing of sound and pictures on the same side of a single positive film of standard width, and I agree with the expert Jones, there "is no functional difference between printing consecutively the picture record and the sound record on the single positive film, as disclosed in this Walker patent, and printing consecutively the separate sound and picture records on a single positive film as disclosed in the patent in suit".

3596

3597

Walker's film is of standard width; the patentees' film is non-standard.

Walker's film, I believe, could be produced by using the separate negatives of Craig and Bullis, in Walker's printer.

It was everyday practice in the motion picture industry, as early as 1908, to print on standard positive film composite pictures from separately developed negatives.

See testimony of Monnenbacher, and Messter patent No. 1,286,383; British patent to Rossi, No. 21,467 A. D. 1902; and British patent to Downing, No. 6,727 A. D. 1913.

3598 *Opinion, Campbell, D. J.*

Each of these patentees made their records on separate films, developed them separately, and printed a plurality of records on the same side of the positive of a moving picture film. The process of the patent in suit is not changed from the process of those patents, as it matters not whether the records printed on the same side of the film be sound and pictures, or a plurality of pictures, as the process steps are identical. *Brown* v. *Piper,* 91 U. S. 37; *Penn Railroad* v. *Locomotive Truck Co.,* 110 U. S. 490; *Dreyfus* v. *Searle,* 124 U. S. 60.

3599

It seems clear to me that in combining the old elements of the claims in suit there was no invention by the patentees, but merely a judicious selection from the prior art. *Newcomb* v. *McMahon,* 59 Fed. (2d) 899.

It is not necessary that all of the elements of an alleged invention be found in one patent. *Zimmerman* v. *Advance Machinery Co.,* 232 Fed. 866, 869, 870; *Dilg* v. *George Borgfeldt & Co.,* 189 Fed. 588, 590; *Keene* v. *New Idea Spreader Co.,* 231 Fed. 701, 708; *Linville* v. *Milberger,* 34 Fed. (2d) 386, 388; *Reflectolyte Co.* v. *Luminous Co.,* 20 Fed. (2d) 607, 611.

3600

The question is not whether the claims in suit are anticipated by any one patent, but whether there is any invention over the prior art, and I am unable to find any such invention.

The three following described patents relate to sound pictures *per se.*

British patent to Pederson, No. 115,942 A. D. 1918, discloses the recording simultaneously of sound and pictures photographically on a single film. After suitable treatment, the sound negative is separately impressed on the single posi-

tive film by embossing, which is a printing operation but not photographic printing, on which the pictures are printed from the original negative.

Kinderman British patent No. 18,163, of 1913, discloses the attaching to the picture negative of a separate wax-coated strip on which he recorded his sound, simultaneously with his pictures, by means of a stylus.

Reimer German patent No. 279,598, of 1914, discloses the recording of sound and pictures simultaneously on separate bands, the picture negative being separately developed, and the sound record separately treated by the well known galvanic process. A copy of the sound record is then made and attached to the separately printed picture positive, forming a single combined sound and picture film. 3602

As to the disclaimer filed herein, after plaintiff had been furnished with a statement showing that both of defendant's films receive the same character of development, it seems to me to be for a purpose that the statute was never designed to permit. *Fruehauf Co.* v. *Highway Co.*, 54 Fed. (2d) 691. 3603

Even with the Disclaimer, claims 6 and 7 show no invention over the prior art.

The claims in suit show no invention over the prior art.

Plaintiff recites at length what it contends are the advantages of the alleged invention, but it seems to me that it does not point to any advantage which does not apply to the prior art which I have considered, and some of the advantages recited by plaintiff are not mentioned in the patent in suit.

3604 *Opinion, Campbell, D. J.*

The cases cited by plaintiff to show validity do not seem to me to be in point.

No commercial success is shown by the plaintiff, and the patentees made no real contribution to the art. The success of the defendant, its licensor and its licensees is due to the many inventions of the Western Electric Company, without which success would have been impossible.

The claims in suit of the patent in suit are invalid by reason of anticipation and lack of in-
3605 vention over the prior art.

The patent in suit is further attacked as invalid under Section 4887 of the Revised Statutes, Title 35, Sec. 32, U. S. Code, so much of which as is necessary for consideration herein providing as follows:

> "No person otherwise entitled thereto shall be debarred from receiving a patent for his invention or discovery, nor shall any patent be declared invalid by reason of its having been first patented or caused to be patented
3606 by the inventor or his legal representatives or assigns in a foreign country, unless the application for said foreign patent was filed more than twelve months, in cases within the provisions of section forty-eight hundred and eighty-six of the Revised Statutes, and four months in cases of designs, prior to the filing of the application in this country, in which case no patent shall be granted in this country."

Patentees' French patent No. 532,750 was granted November 21, 1921, on an application filed March 25, 1921. This application was filed more than one year before March 29, 1922, the

filing date in this country of the patent in suit. The French patent was granted long before the patent in suit.

The prosecution of the application filed in this country April 4, 1921, was abandoned by the applicant.

It seems clear to me, although it is sharply contested by plaintiff, that the French patent is for the same alleged invention as the patent in suit, as it discloses simultaneous recording of sound and picture records on separate films, 3608
which by reason of being separate are necessarily separately developed, and printing of the separate negatives on the same positive film.

While it is true that what is known as "scoring", in which the sound is recorded after the pictures are taken and while they are being projected, is also disclosed in the French patent, that does not change my opinion hereinbefore stated, that the patent in suit is for the same alleged invention, and that is the question to be determined. *General Electric Co.* v. *Alexander*, 280 Fed. 852, 854.

3609

Plaintiff's contention that this defendant failed to prove what invention was patented under the laws of France, in the said French patent, is not sustained.

The French patent is in evidence and speaks for itself, and both describes and claims the alleged invention of the patent in suit.

The courts in dealing with this statute have always looked to the claims of the foreign patents and read them in the light of the disclosure and decided what is patented, the same as they do with the domestic patents. *Merrell-Soule Co.* v. *Powdered Milk Co.*, 222 Fed. 911, 913; *Sirocco*

3610 *Opinion, Campbell, D. J.*

Co. v. *Sturtevant Co.*, 220 Fed. 137, 143; *Commercial Acetylene Co.* v. *Searchlight Gas Co.*, 188 Fed. 85; *Siemens* v. *Sellers*, 123 U. S. 276, 282; *Leeds & Catlin* v. *Victor Co.*, 213 U. S. 301, 321; *Fireball Gas Co.* v. *Commercial Acetylene Co.*, 239 U. S. 156, 165.

See also *Western Electric Co.* v. *Citizens' Tel. Co.*, 106 Fed. 215, at page 217, where it is expressly stated that the laws of the foreign countries were not proved, but the Court held that
3611 the foreign patent, an Italian patent having no formal claims, was for the same invention.

The French patent undoubtedly claims the process of claims 6, 8 and 9 of the patent in suit, and I can find no support for plaintiff's contention that the French claims do not touch upon separate development which is specified in claims 5, 7 (by Disclaimer) and 11 in suit.

Separately recorded records are described and expressly claimed in the French patent, and the evidence clearly shows that separately recorded records are necessarily separately developed.

3612 Plaintiff's attempt to distinguish between claims 7 and 9 of the patent in suit and the French claims, on the alleged grounds that the latter do not touch upon the matter of consecutive printing, and that the French claims do not state that the films are separate at the time of development (as stated in Disclaimer, Amendment 6) utterly fails.

Neither is a matter of substance nor constitutes the essence of the alleged invention.

That the films are separate at the time of development is obvious, and claim 5 of the French patent clearly states that the two records are copied on the same film, and it is of no moment

whether both records are printed at once, or one after the other.

What is required to constitute identity of a patent within the purview of Section 4887 is substantial not formal identity of invention, as covered by the claims. *United Shoe Machinery Co.* v. *Duplessis Co.,* 148 Fed. 31, 34, 35.

The abandonment of the application based on the French patent, which was for the same alleged invention as that of the patent in suit, made it impossible for the patentees to obtain a 3614
United States patent on an application, filed more than one year after the French application, for the alleged invention of that patent. *Robert Esnault-Pelterie* v. *Chance Vought Corporation,* C. C. A., Second Circuit, July 17, 1933.

The patent in suit is invalid under Section 4887, R. S., Title 35, Sec. 32, U. S. Code, unless plaintiff can maintain its contention that the application for the patent in suit is a continuing application, and entitled to the dates of the abandoned application.

In order to accord to the patent in suit the 3615
date of the abandoned application, intent to continue the earlier abandoned application by means of the application for the patent in suit must be shown.

On the face of the application for the patent in suit, it was entirely independent of and hostile to the abandoned application, and nowhere in the prosecution of the application for the patent in suit is there any suggestion of the intent to continue.

Further, it seems to me that in the prosecution of the application for the patent in suit, the intent to continue was not merely absent, but that the evidence shows an intent not to continue.

3616 *Opinion, Campbell, D. J.*

As late as April, 1931, in the brief filed on behalf of the patentees in the interference with DeForest, it was stated that the earliest date to which they could carry back the date of application for the patent in suit was "limited to April 14, 1921", the date of the German application corresponding to the patent in suit.

The preliminary statement of patentees in said interference states:

3617 "The invention was introduced into the United States by the application papers, viz., the present application Ser. No. 547,860, which papers were received in the United States on or about the 24th day of March, 1922."

It contains no reference to the application for the French patent on which plaintiff now seeks to rely, or to any other foreign application corresponding to the abandoned United States application.

3618 The oath to the application for the patent in suit contains no reference to the application for the said French patent or other corresponding foreign application, as required by the rules of the Patent Office.

On January 26, 1925, the Examiner rejected the patentees' claims on the patentees' own British application, No. 157,751, corresponding to the abandoned United States application and the said French patent.

No attempt was made by the patentees to carry back their date to that of the abandoned application, but they contended that the British complete specification was not accepted and the application had become void, and that although a

publication, it was not available as a reference, as it was not a printed publication more than two years prior to the then pending application.

No mention was made of the French application which had enured into a patent some years before.

It seems clearly established that the patentees did not intend to continue the abandoned application but to prosecute the application for the patent in suit as an independent and hostile application. *American Casting Mach. Co.* v. *Pittsburgh Coal Washer Co.*, 237 Fed. 590. 3620

That the Scott's abandoned application described in the case last cited was a joint application does not change the situation, as a joint application could while pending have been amended to make it a sole application or a new joint application filed while preserving the benefit of the date of the original application. *Union Switch & Signal Co.* v. *Kodel*, 55 Fed. (2d) 173; *In re Roberts*, 263 Fed. 646; *Bijur* v. *Kennington*, 278 Fed. 313; and *Briggs* v. *Kaisling*, 288 Fed. 254.

The following cases cited by plaintiff are not in point, as in each case a clear intention to continue was expressed while the application was pending. *Smith* v. *Goodyear Co.*, 93 U. S. 486; *Corrington V. Westinghouse*, 178 Fed. 711; *Novadel Corp.* v. *J. P. Meyer & Co.*, 35 Fed. (2d) 697. 3621

Plaintiff is debarred from claiming, as it did for the first time on the final hearing of this suit, that the application for the patent in suit is a continuing application, and entitled to the date of its abandoned application.

The patent is invalid.

A decree may be entered in favor of the defendant against the plaintiff dismissing the bill of complaint on the merits, with costs.

3622 *Final Decree.*

Settle decree on notice.

Submit proposed findings of fact and conclusions of law in accordance with this opinion for the assistance of the Court, as provided by Rule 70½ of the Equity Rules and Rule 11 of the Equity Rules of this Court.

MARCUS B. CAMPBELL,
U. S. D. J.

3623 **Final Decree.**

(Filed Oct. 11, 1933.)

At a Stated Term of the District Court of the United States for the Eastern District of New York, held in the United States Court House in the Borough of Brooklyn, City of New York, on the 11th day of October, 1933.

Present:

3624 Hon. MARCUS B. CAMPBELL,
United States District Judge.

AMERICAN TRI-ERGON CORPORATION, Plaintiff, vs. PARAMOUNT PUBLIX CORPORATION, Defendant.	In Equity No. 5800. U. S. Letters Patent No. 1,825,598.

This cause having come on to be heard at this term and having been argued by counsel, and

counsel having stipulated that the opinion of the Court filed herein August 14, 1933, be accepted as a sufficient statement of findings of fact and conclusions of law in this case, under Equity Rule 70½ and Rule 11 of the Equity Rules of this Court, thereupon, upon consideration thereof, it is ORDERED, ADJUDGED AND DECREED as follows, viz.:

1. That claims 5 to 9 inclusive and claim 11, and each of them, of United States Letters Patent No. 1,825,598, to Vogt, Massolle and Engl, assigned to American Tri-Ergon Corporation, for "Process for Producing Combined Sound and Picture Films" are invalid. 3626

2. That the bill of complaint herein be, and the same hereby is dismissed with costs to the defendant to be taxed.

MARCUS B. CAMPBELL,
United States District Judge.

Dated, October 11, 1933. 3627

Approved as to Form:

S. MORTIMER WARD, JR.,
Counsel for Plaintiff.

3628 **Stipulation as to Findings of Fact and Conclusions of Law.**

(Filed Oct. 11, 1933.)

UNITED STATES DISTRICT COURT,

EASTERN DISTRICT OF NEW YORK.

AMERICAN TRI-ERGON CORPORATION, Plaintiff, vs. PARAMOUNT PUBLIX CORPORATION, Defendant.	In Equity No. 5800.

3629

IT IS HEREBY STIPULATED AND AGREED, by and between the parties hereto, that the opinion of the Honorable Marcus B. Campbell, filed herein August 14, 1933, be accepted as a sufficient statement of findings of fact and conclusions of law in this case, under Equity Rule 70½ and Rule 11 of the Equity Rules of this Court.

3630

Dated, October 11, 1933.

S. MORTIMER WARD, JR.,
Counsel for Plaintiff.

CHARLES NEAVE,
Counsel for Defendant.

3631

Petition for Appeal.

(Filed Dec. 21, 1933.)

UNITED STATES DISTRICT COURT,

EASTERN DISTRICT OF NEW YORK.

AMERICAN TRI-ERGON CORPORATION, Plaintiff, vs. PARAMOUNT PUBLIX CORPORATION, Defendant.	In Equity No. 5800.

3632

The above named plaintiff, feeling itself aggrieved by the final decree made and entered in the above-entitled cause on or about the 11th day of October, 1933, hereby does appeal from said final decree to the United States Circuit Court of Appeals for the Second Circuit, for the reasons set forth in the assignment of errors filed herewith and it prays that its appeal be allowed and that citation be issued as provided by law, directed to the above-named defendant, commanding it to appear before the United States Circuit Court of Appeals for the Second Circuit, to do and receive what may pertain to justice to be done in the premises, and that a transcript of the record, proceedings and documents upon which said decree was based, duly authenticated, be sent to the United States Circuit Court of Appeals for the Second Circuit.

3633

Dated, New York, N. Y., December 18th, 1933.

WARD, CROSBY & NEAL,
Solicitors for Plaintiff.

3634 *Order Allowing Appeal and Supersedeas.*

Service of a copy of the foregoing Petition for Appeal is acknowledged this 21st day of December, 1933.

HENRY R. ASHTON,
Solicitor for Defendant.

Order Allowing Appeal and Supersedeas.

3635 At a Stated Term of the District Court of the United States for the Eastern District of New York, held in the United States Court House in the Borough of Brooklyn, City of New York, on the 21st day of December, 1933.

Present:

Hon. MARCUS B. CAMPBELL,
United States District Judge.

3636

AMERICAN TRI-ERGON CORPORATION, Plaintiff, vs. PARAMOUNT PUBLIX CORPORATION, Defendant.	In Equity No. 5800.

The plaintiff having presented its petition for appeal herein, it is ORDERED:

1. That the plaintiff's appeal is allowed as prayed for.

Stipulation as to Bond, etc. 3637

2. That all proceedings herein be stayed, saving those connected with the appeal herein, pending the final determination of said appeal, or the further order of this Court.

3. That the annexed stipulation by and between attorneys for the respective parties waiving the filing of a bond for security for costs on appeal to the Circuit Court of Appeals, is approved.

MARCUS B. CAMPBELL,
U. S. D. J. 3638

Stipulation as to Bond, etc.

UNITED STATES DISTRICT COURT,

EASTERN DISTRICT OF NEW YORK.

AMERICAN TRI-ERGON CORPORATION, Plaintiff, vs. PARAMOUNT PUBLIX CORPORATION, Defendant.	In Equity No. 5800.

3639

IT IS STIPULATED AND AGREED by and between the attorneys for the respective parties that all proceedings herein be stayed, saving those connected with the appeal herein, pending the final determination of said appeal, or the further order of this Court, and that the filing of a bond

3640 *Assignment of Errors.*

for security for costs on appeal to the Circuit Court of Appeals in the above-entitled suit is hereby waived.

New York, N. Y., December 18th, 1933.

WARD, CROSBY & NEAL,
Attorneys for Plaintiff.

HENRY R. ASHTON,
Attorney for Defendant.

3641

Assignment of Errors.

(Filed Dec. 21st, 1933.)

UNITED STATES DISTRICT COURT,

EASTERN DISTRICT OF NEW YORK.

3642

AMERICAN TRI-ERGON CORPORATION, Plaintiff, vs. PARAMOUNT PUBLIX CORPORATION, Defendant.	In Equity No. 5800.

Now comes the plaintiff in the above-entitled cause and files the following assignment of errors on which it will rely upon its prosecution of the appeal in the above-entitled cause from the decree made by this Honorable Court and

made and entered on or about the 11th day of October, 1933:

1. The Court erred in dismissing the bill of complaint.

2. The Court erred in holding Vogt, Massolle and Engl Patent No. 1,825,598 in suit to be invalid, and invalid in respect to the subject matter of claims 5 to 9, inclusive, and claim 11 herein in issue.

3644

3. The Court erred in holding that the said claims in suit are invalid because anticipated by the prior art.

4. The Court erred in holding that the said claims in suit are valid because they lack invention over the prior art.

5. The Court erred in holding that the patent in suit was invalid under Section 4887 of the Revised Statutes, Title 35, Sec. 32, U. S. Code, by reason of the patentees' French Patent No. 532,- 3645
750, granted November 21, 1921, on an application filed March 25, 1921.

6. The Court erred in not entering a decree holding claims 5 to 9 inclusive and claim 11 of the patent in suit to be valid and infringed by the defendant.

7. The Court erred in not entering a decree for an injunction restraining the defendant from infringement of said patent.

8. The Court erred in not entering a decree awarding plaintiff an accounting for profits and

3646 *Note as to Citation.*

damages by reason of infringement by the defendant of said patent.

9. The Court erred in awarding costs to defendant and in not awarding costs to plaintiff.

WHEREFORE, and for divers other errors in the record of this cause appearing, plaintiff-appellant prays that the decree entered herein on the 11th day of October, 1933, be reversed and a decree be directed to be entered holding the pat-
3647 ent in suit valid and infringed by defendant and granting the relief prayed for in the bill of complaint and awarding the plaintiff costs in the United States District Court and in the United States Circuit Court of Appeals, and for such other and further relief as to the Court may seem right.

AMERICAN TRI-ERGON CORPORATION,
By WARD, CROSBY & NEAL,
Solicitors for Plaintiff.

3648 Service of a copy of the foregoing Assignment of Errors is acknowledged this 21st day of December, 1933.

HENRY R. ASHTON,
Solicitor for Defendant.

Note as to Citation.

Citation was duly issued and served on December 22, 1933.

Stipulation and Order as to Certain Exhibits. 3649

IN THE UNITED STATES CIRCUIT COURT OF APPEALS,

FOR THE SECOND CIRCUIT.

AMERICAN TRI-ERGON CORPORATION,
Plaintiff-Appellant,

vs.

PARAMOUNT PUBLIX CORPORATION,
Defendant-Appellee.

No. 3650

IT IS HEREBY STIPULATED by and between solicitors for the respective parties that the printing of the following listed exhibits may be dispensed with on appeal of this case:

Plaintiff's Exhibits 7 to 11 incl., comprising voluminous title papers relative to the patent in suit.

Plaintiff's Exhibits 12a, 17, 18, 19, 20, 21 and Defendant's Exhibits A, C, D, E, K, 3651 comprising film and photographic exhibits.

Defendant's Exhibit I, comprising record and briefs, and opinion re an interference before United States Court of Customs and Patent Appeals. Three copies of this exhibit will be presented at the hearing of the appeal.

New York, N. Y., December 30th, 1933.

WARD, CROSBY & NEAL,
Solicitors for Plaintiff-Appellant.

HENRY R. ASHTON,
Solicitor for Defendant-Appellee.

3652 *Stipulated Praecipe.*

So Ordered:

MANTON,
United States Circuit Judge.

January 4th, 1934.

Stipulated Praecipe.

UNITED STATES DISTRICT COURT,

3653 EASTERN DISTRICT OF NEW YORK.

AMERICAN TRI-ERGON CORPORATION, Plaintiff, vs. PARAMOUNT PUBLIX CORPORATION, Defendant.	In Equity No. 5800.

3654 It is hereby stipulated and agreed by and between the solicitors for the respective parties that the transcript of the record on appeal in the above named cause shall include therein the following, this stipulation being considered as a formal praecipe:

1. Bill of complaint filed November 19, 1931.
2. Answer filed January 26, 1932, and orders amending Answer dated November 18, 1932 and November 23, 1932.
3. Condensed statement of the evidence shown by stenographer's minutes with corrections and omissions as agreed upon by counsel.

4. Opinion of District Court filed August 14, 1933.
5. Stipulation filed October 11, 1933, that said opinion be accepted as sufficient statement of findings of fact and conclusions of law.
6. Final decree of District Court, entered October 11, 1933.
7. Petition for appeal, filed December 21, 1933; Order allowing appeal and supersedeas entered December 21, 1933, and stipulation re latter including waiver of bond, dated December 18, 1933. 3656
8. Assignment of errors.
9. The following statement: "Citation was duly issued and served on December 22, 1933".
10. The following plaintiff's exhibits: 1, 2, 3, 4, 4a, 6, 13, 14, 15, 16, 22, 23, 24, 25, 27, 28, 28a to h, incl., 29, 30, 31, 32, 33, 34, 35, 36, 37, 38.
11. The following defendant's exhibits: B, F, G, H, J, L, M, N, O, P, Q, Q-1, R, S.
12. Stipulation and order authorizing certain exhibits to be treated as physical exhibits. 3657
13. This stipulated praecipe.
14. Stipulation and order as to correctness of record.
15. Clerk's certificate.

It is further stipulated that the remaining exhibits offered in evidence by both parties are to be identified in the record, produced at the hearing in the Court of Appeals and treated as physical exhibits, and that any of the exhibits offered in evidence by both parties may be referred to

3658 *Stipulated Praecipe.*

and used on the hearing in the Court of Appeals as though they were physical exhibits.

Dated, December 29th, 1933.

WARD, CROSBY & NEAL,
Solicitors for Plaintiff.

HENRY R. ASHTON,
Solicitor for Defendant.

3659 Filed Dec. 29, 1933.

3660

3661

Stipulation.

UNITED STATES DISTRICT COURT,

EASTERN DISTRICT OF NEW YORK.

AMERICAN TRI-ERGON CORPORATION, Plaintiff, vs. PARAMOUNT PUBLIX CORPORATION, Defendant.	In Equity No. 5800.

3662

IT IS STIPULATED AND AGREED by and between counsel for the parties hereto that counsel may refer in briefs and argument before the Court of Appeals to any motions and statements made by counsel for either party at the trial, and the Court's rulings thereon, and also to the original transcript of the testimony.

WARD, CROSBY & NEAL,
Solicitors for Plaintiff.

3663

HENRY R. ASHTON,
Solicitor for Defendant.

3664 **Order Extending Time.**

UNITED STATES DISTRICT COURT,

EASTERN DISTRICT OF NEW YORK.

AMERICAN TRI-ERGON CORPORATION, Plaintiff, vs. PARAMOUNT PUBLIX CORPORATION, Defendant.	In Equity No. 5800.

3665

Upon consent of counsel, it is ORDERED that the time within which the record on appeal herein must be filed in the office of the Clerk of the United States Circuit Court of Appeals for the Second Circuit be and the same hereby is extended to and including the 21st day of February, 1934, and the time for all other acts, returns, and appearances in connection with said appeal taken as aforesaid, is likewise extended.

3666 Dated Brooklyn, N. Y., January 19th, 1934.

MARCUS B. CAMPBELL,
United States Judge.

Consented to:
WARD, CROSBY & NEAL,
Solicitors for Plaintiff.

HENRY R. ASHTON,
Solicitor for Defendant.

Stipulation. 3667

UNITED STATES DISTRICT COURT,

EASTERN DISTRICT OF NEW YORK.

AMERICAN TRI-ERGON CORPORATION, Plaintiff-Appellant, vs. PARAMOUNT PUBLIX CORPORATION, Defendant-Appellee.	In Equity No. 5800.

3668

It is hereby stipulated and agreed that the foregoing (in 3 vols.) is a true copy of the transcript of the record of the said District Court in the above-entitled matter as agreed on by the parties.

Dated, February 20th, 1934.

WARD, CROSBY & NEAL,
Solicitors for Plaintiff.

HENRY R. ASHTON,
Solicitor for Defendant. 3669

On reading the foregoing consent of the solicitors for the respective parties herein, it is ordered that the foregoing printed record be filed in lieu of the original papers for the purpose of certifying a record on appeal.

Dated, February 26th, 1934.

MARCUS B. CAMPBELL,
U. S. D. J.

3670

Clerk's Certificate.

UNITED STATES OF AMERICA, }
Eastern District of New York, } ss.:

AMERICAN TRI-ERGON CORPORATION, Plaintiff-Appellant, vs. PARAMOUNT PUBLIX CORPORATION, Defendant-Appellee.	In Equity No. 5800.

3671

I, PERCY G. B. GILKES, Clerk of the District Court of the United States of America for the Eastern District of New York, do hereby certify that the foregoing (in 3 vols.) is a correct copy of the transcript of the printed record in the above-entitled matter as agreed on by the parties and ordered filed by the court.

3672

In testimony whereof, I have caused the seal of the said Court to be hereunto affixed, at the City of New York, in the Eastern District of New York, this 26th day of February, in the year of our Lord one thousand nine hundred and thirty-four, and of the Independence of the said United States the one hundred and fifty-eighth.

PERCY G. B. GILKES,
Clerk.

(Seal)

[fol. 1225] UNITED STATES CIRCUIT COURT OF APPEALS FOR THE SECOND CIRCUIT

AMERICAN TRI-ERGON CORPORATION, Plaintiff-Appellant,

against

PARAMOUNT PUBLIX CORPORATION, Defendant-Appellee

Before Manton, Swan and Chase, Circuit Judges

Appeal from the District Court for the Eastern District of New York. Suit for infringement of patent; decree for defendant; plaintiff appeals. Reversed.

Ward, Crosby & Neal, Esqs., Solicitor for Appellant. Theodore S. Kenyon, Esq., S. Mortimer Ward, Jr., Esq., Page S. Haselton, Esq., of Counsel.

Charles Neave, Esq., Henry R. Ashton, Esq., William J. Barnes, Esq., F. T. Woodward, Esq., E. J. Driscoll, Esq., Counsel for Appellee.

MANTON, Circuit Judge:

This suit is for infringement of patent No. 1,825,598, a process for producing combined sound and picture films. It is called sound on film. The application for the patent was filed March 29, 1922, and granted September 29, 1931, after a long interference proceeding with DeForest patent No. 1,489,314 which was finally decided by the Court of Customs and Patent Appeals in appellant's favor. Prompt [fol. 1226] prosecution for this infringement followed.

Appellee is a producer of talking motion pictures and practices this process of producing sound on film motion pictures as taught by the patent in suit. The Western Electric Co., and its wholly owned subsidiary, Electric Research Products, Inc., licensed its licensees, including the appellee, to use the process as the "Western Electric Sound System".

A German application for the same process was filed April 14, 1921.

The problem sought to be solved by the patent was bringing together on one positive film the picture record, which requires one type of development, and a sound record which requires a different type of development. Its accomplish-

ment marked an important advance in the art. Makers of talking motion pictures, including the Western Electric Co. and its associates, during the period following the application for this patent tried, but until the invention exhibited this process, accomplished little with the development of sound on film. While all apparatus necessary to practice the present invention was at hand and owned by the Western Electric Co. and its affiliates, no one solved the film problem presented by the requirement of different treatment for sound and picture records. The difference in treatment was necessary to avoid distortions of one or the other or both in reproduction. The engineers of the Western Electric Co., in this period, struggling for the solution of the problem of sound on film development, turned to sound on disc. The first successful talking motion picture in this country was produced by sound on disc. The process of the patent in suit was brought to this country from [fol. 1277] Germany. Western Electric Co.'s engineers examined and tested it. They thereupon used it and it superseded sound on disc. Its adoption has become universal and speaks for the merit of the inventive thought therein involved. No sound on film was made as this record discloses until the appellant's process appeared. Prior patents proposed using sound on film in connection with motion pictures. One was the single film system which involved recording sound and pictures simultaneously on the same negative film, developing that film as a unit, and then printing the sound and picture records from the single negative film onto a single positive film. This involved no separate development of the sound and picture sequences on a negative film, and was unacceptable for talking pictures of good quality. Pictures require one type of development while sound requires another. No single developing treatment is appropriate to both. Simultaneous development in a single developer produces poor pictures or poor sound or both. The resulting inferior product has relegated the system to uses where sound is not of importance. The other system, the double film system, records sound and pictures simultaneously on separate films. Here the picture negative is developed and printed on one positive film and the sound negative is separately developed and separately printed on another positive film. This system in practice requires two separate projectors, one for the picture positive and the other for the sound positive.

This necessitates the use and synchronization of a double set of projectors, which makes it impractical to commercialize the double film system. Prior patents suggested employing a double film system and endeavored to bind the two separate films on a single projector. But this was [fol. 1228] cumbersome and impracticable. The double film system did not permit the use of a single or unitary positive print and failed to solve the problem.

By the invention in suit, a product of a single positive film bearing the sound and picture records side by side is produced. The new process permits both the sound record and the picture record on the positive film to be as perfect as the arts of photography and telephony can make them and neither is compromised in quality by reason of the presence of the other, as was the case in single film systems. The result is accomplished by recording the sound and pictures on separate films; then separately developing the sound and picture films in separate developer solutions under development conditions appropriate to the requirements of each. A single positive print is made from these two separately developed negatives, by printing the sound and picture sequences side by side on the same face of the positive film. While it might be said that superficially the positives so produced are similar to the positives produced by the single film system, still the function and effect is different and in the practical art that difference has been demonstrated. Combining steps of the double film system and steps of the single film system, the inventors have made a combination, and a process for achieving a new result which has been effective and enduring and has become the standard practice in the industry.

The practical importance and achievement of the invention lies in its product—a one piece positive film having side by side in fixed synchronism on one face picture sequences and sound sequences, each having been recorded simultaneously on separate negatives and developed separately according to its own requirements.

[fol. 1229] The claims sued upon are 5, 6, 7, 8, 9 and 11. Claims 6 and 7 are to be read with the disclaimer filed. Claim 5 is typical and reads:

"5. A process for producing a combined sound and picture positive film, for talking moving pictures, comprising, photographing a sequence of pictures on one length of

film, and simultaneously photographing on another length of film a corresponding sequence of sounds accompanying the action, separately developing the two negatives in a manner appropriate for each, and printing the sound and picture negatives respectively upon different longitudinally extending portions of the same sensitized film, to form the sound sequence at one side of and along the picture sequence."

The commercial use of the patented process is fullsome testimony of its inventive worth. The result of testing it by the inquiry, as it should be, of what has been the commercial success of the invention rather than the appellant's commercial success, adds greatly to its validity.

In addition to the German patent for the same process, a British application for the same process was filed April 11, 1922. It was identical with the United States and German application. The British application resulted in a patent as did the German. The Western Electric Co. scientist, Dr. Wente, applied for a patent disclosing and claiming the invention of the patent in suit. The application stated that for correct sound reproduction

"it is important that the development of the positive and negative be so carried out that the transmission of the positive is at every point proportional to the exposure of [fol. 1230] the negative. This is in general not the best condition for the pictures as under these circumstances they will usually be too harsh. In the system here proposed the picture negative and positive can be developed to give the most pleasing results for pictures, and yet the negative of the sound record can be so developed that when it is printed on the picture positive film the required contrast is obtained in the positive sound record."

His claim No. 31 was rejected on the patent of these inventors' (British Patent No. 178,442) corresponding to the patent in suit and was cancelled. And after that experience, it is now argued, by the Western Electric Co. which is defending this suit, that there is no validity. That Company is hardly in a position to question validity of the patent. DuBois v. Kirk, 158 U. S. 58; General Knit Fabric Co. v. Steber Machine Co., 194 Fed. 99 (C. C. A. 2); Sugar Apparatus v. Yaryan, 43 Fed. 140, 144.

The patents of the prior art to which reference is made, are fairly stated to be but paper patents and they do not anticipate. Composite printing of photographs is illustrated in the Bendman patent No. 125,522 and Jenkins patent No. 606,993. An apparatus for printing motion picture films with pictures arranged alternately in two adjacent series is shown in Dyer No. 970,614. The Haines British patent of 1906, No. 18,057, is an example of single film system. It is clear, however, from the description, that both the picture series and the sound track were to be recorded on the same negative film. The Rossi British patent of 1909, No. 21,467, had the idea of saving expense in positive [fol. 1231] prints by printing the picture series from one picture negative on one half of the positive print and another picture series of another picture negative on the other half of the positive print along side the first series. The inventor made no suggestion of the combination of the two systems, nor does he disclose any process whereby the single positive film may be produced with sound and picture sequences after separate development of each appropriate to their respective requirements. Craig No. 1,260,337; Bullis No. 1,335,651 and Greensfelder No. 1,254,684 were before the patent office and there held not to be anticipations. Craig did not show or describe anywhere a sound and picture record on a single film where the sound and picture records did not overlie each other. In the process he was attempting to operate, he wanted to print on opposite sides. The experts agree that this is wholly inoperative. His patent was owned by a well known corporation—the Eastman Kodak Co.—with resources for investigation and practical uses, but apparently it was found of little value. Greensfelder proposed carrying out his purpose by providing a space for different sound marks adjacent to each film of the picture sequence. The location of the sound mark in the space controlled the noise to be produced. Each location was to be connected by a separate selenium cell and train of mechanism, with the noise machine corresponding to that location. Thus, if a sound mark were recorded on the extreme left of the space it might effect the beat of a drum; if it were in a different location it might blow a whistle. The invention in suit has a photographic picture of sound waves on the sound track. [fol. 1232] Greensfelder had only an arbitrary arrange-

ment of sound marks each identical with the other and differing only in its location in the space reserved for the sound marks. Greensfelder takes his picture negative, develops and prints it first before trying to make sound marks at all. The latter are to be on a separate film after the picture positive has been completed and reproduced as a silent movie. In no event does the development of Greensfelder's sound mark negative present any problem like that in the independent development of the sound and picture negatives. Greensfelder does not provide for separate development of picture and sound negatives. He has no sound negatives, and as a practical matter the patent is addressed to a method to escape from problems of photographic recording of the natural sounds accompanying the action. It does not deal with the "talkies" problem. The Walker patent No. 1,186,717 was limited to an old single film system; the sound and pictures were to be taken simultaneously on a single negative developed together and printed together. There is no disclosure of the separate development of the sound and picture negatives in the manner appropriate for each, and their subsequent printing on the same positive film. All the disadvantages that are inherent in the single film system with its identical development of both the sound and picture sequences, are present in Walker's disclosure, and he makes no suggestion which would aid in avoiding them. Other patents of the prior art are far afield from any anticipation of the patent in suit.

A defense of abandonment is interposed under Revised Statutes § 4920. It must be affirmatively pleaded in the [fol. 1233] answer, and this was not done. The claim of abandonment imposes a heavy burden upon one asserting it.

On April 14, 1922, the examiner rejected the claims citing Bullis patent No. 1,335,651. On November 25, 1922, the applicants cancelled their original claims from the United States application and inserted a single claim addressed to the divisible negative film feature which was the subject matter of original claim 3. On December 7, 1922 the corresponding British patent issued with but a single claim identical with the divisible film claim then standing in the United States application. On September 29, 1924 before any use of the invention in this country,

claims corresponding in scope to claims 5, 6, 7 and 11 were asserted in the United States application. After March 31, 1925, claims corresponding in scope to claims 8 and 9 in suit were asserted in the application. There were no intervening rights of any sort established by the appellee or by the public in the interval between November 25, 1922 and March 31, 1925, nor was there any unreasonable delay on the part of the applicants in reasserting their invention in the broad scope justified by the original disclosure. Throughout the entire period, the applicants were asserting the invention in its broad scope in their German application and patent. That application was never restricted to the divided film system but was maintained in language broad enough to cover either the separate film system of the claims in suit or the divided film system illustrated in the United States patent. If the applicants to any degree acquiesced in the limitations in the British patent, the evidence is ample of their insistence on the invention in its broad scope in the German application. It is a common [fol. 1234] practice to vary the scope of the claims during the course of a patent application. To temporarily cancel the broad claims and later reassert them is permissible. In the absence of intervening rights such claims are entirely proper. There is no requirement that the applicant shall in all cases from the date of application to the date of issue assert claims as broad in scope as those ultimately allowed. Wirebounds Patents Co. et al. v. Saranac Automatic Machine Corp., 37 Fed. (2) 880 (C. C. A. 6); Auto Pneumatic Action Co. v. Kindler & Collins, 247 Fed. 323 (C. C. A. 2). This defense may not be sustained.

The interference between the application in suit and DeForest Patent No. 1,489,314 was won by the patentees in the tribunals of the Patent Office and the Court of Customs & Patent Appeals. The DeForest invention was subsequent to the invention of the patent in this suit.

The appellee argues that the patent in suit is invalid under the provisions of Revised Statutes § 4887 because of the issuance of a French patent No. 532,750, twelve months before filing the application of the patent in suit. To constitute invalidity of the present patent by the French application, it must be shown that the inventions actually claimed in that foreign country and those of the patent in suit are identical. It is not enough to say that the French

patent may disclose the invention of the later United States patent, when it is not therein claimed. Leeds & Catlin v. Victor Talking Machine Co., 213 U. S. 301; General Electric Co. v. Alexander, 280 Fed. 852 (C. C. A. 2). The question becomes one of identity between them. There is no [fol. 1235] such identity here. The French patent is for a photo-phonetic film, namely, an apparatus or product claim, which cannot be identical with or fatal to a process claim. Leeds & Catlin v. Victor Talking Machine Co., supra; Fireball Gas Tank & Illuminating Co. v. Commercial Acetylene Co., 239 U. S. 156. The French patent is essentially a proposal for escaping from the difficulties of recording natural sounds accompanying the action. The significance of the independent recording of concomitant sounds is apparent from the language of the specification. Nowhere in the French claims or specification is there a suggestion of the characteristic feature of separate and independent development of the negatives to compensate for different exposure in recording. The purpose of the French patent was to avoid the photographing of sounds "from sources which are scenic". Here the purpose is just the opposite. The distortions of sound and pictures which apparently had been unavoidable in single film practice and which had made scoring preferable have now been removed. The French patent in no way treats of separate development.

The patentees fully complied with Revised Statutes § 4887 as to the French patent by filing an application substantially identical therewith in the Patent Office of the United States on April 4, 1921, ten days after the filing of the French application. While the application was pending in the United States, they filed a German application for the invention here in suit, and within the allowed period, thereafter filed the United States application for the patent in suit. The two United States applications were thus co-pending, and while the patentees have been insistent and consistent in their position that the inventions covered by [fol. 1236] the successive patents were not the same, still, if the inventions were the same, the first United States patent was filed within the convention period and their second application, being co-pending, is true continuation of the first. Novadel Process Corp. v. J. P. Meyer & Co., 35 Fed. (2) 697 (C. C. A. 2); Victor Talking Machine Co. v. American Graphaphone Corp., 145 Fed. 350 (C. C. A. 2).

The appellees' process infringes the claims in suit. The stipulation provides that the appellee's process for producing a combined sound and picture positive film for talking motion pictures comprises recording photographically a sequence of pictures on one length of film and simultaneously recording photographically a series of sounds accompanying the scenes on a separate film. The picture negative and sound negative are developed separately and in different developers. The choice of developers and the time of development being such as to give the desired result. The picture and sound negatives thus separately made and separately developed are printed successively in properly spaced relation on the same surface of a positive film. In this manner a single positive film carrying the sound sequences and picture sequences is produced. There is no material difference between the purpose for which the appellee uses the process and that described in the patent. In any case, the appellee uses the process of the patent and achieves the results intended by the patentees. The patent is valid and infringed.

Decree reversed.

Swan, J., dissenting.

[fol. 1237] UNITED STATES CIRCUIT COURT OF APPEALS,
SECOND CIRCUIT

At a stated term of the United States Circuit Court of Appeals, in and for the Second Circuit, held at the courtrooms in the Post Office building in the City of New York, on the 11th day of June, one thousand nine hundred and thirty-four.

Present: Hon. Martin T. Manton, Hon. Thomas W. Swan, Hon. Harrie B. Chase, Circuit Judges.

AMERICAN TRI-ERGON CORPORATION, Plaintiff-Appellant,

vs.

PARAMOUNT PUBLIX CORPORATION, Defendant-Appellee.

Appeal from the District Court of the United States for the Eastern District of New York.

This cause came on to be heard on the transcript of record from the District Court of the United States for the

Eastern District of New York, and was argued by counsel.

On consideration whereof, it is now hereby ordered, adjudged, and decreed that the decree of said District Court be and it hereby is reversed with costs.

It is further ordered that a Mandate issue to the said District Court in accordance with this decree.

Wm. Parkin, Clerk.

[fol. 1238] [Endorsed:] United States Circuit Court of Appeals, Second Circuit. American Tri-ergon Corporation vs. Paramount Publix Corporation. Order for Mandate. United States Circuit Court of Appeals, Second Circuit. Filed Jun. 11, 1934. William Parkin, Clerk.

United States Circuit Court of Appeals

FOR THE SECOND CIRCUIT.

No. 430.

AMERICAN TRI-REGON CORPORATION,

Plaintiff-Appellant,

vs.

PARAMOUNT PUBLIX CORPORATION,

Defendant-Appellee.

PETITION FOR REHEARING BY DEFENDANT-APPELLEE.

CHARLES [illegible],

HENRY [illegible],

Counsel for Defendant-Appellee.

INDEX.

	PAGE
Statement	1
1. The Patented Process Had Nothing Whatsoever to do With the Successful Commercialization of Sound-on-Film Talking Pictures	3
2. There was No Patentable Invention in the Process	18
3. The Patent Office Proceedings and the De Forest Interference Did Not Create But, Rather, Rebut any Presumption of Validity of the Claims	28
Certificate	35

United States Circuit Court of Appeals

FOR THE SECOND CIRCUIT.

AMERICAN TRI-ERGON CORPORATION, Plaintiff-Appellant, vs. PARAMOUNT PUBLIX CORPORATION, Defendant-Appellee.	No. 439.

PETITION FOR REHEARING BY DEFENDANT-APPELLEE.

On behalf of the defendant-appellee, Paramount Publix Corporation, we respectfully petition for a rehearing, being most sincerely convinced that the decision of this Court, if permitted to stand, will result in a great injustice to the entire motion picture industry of this country and will place a heavy burden on that industry which has no reasonable relation to anything that the patentees did.

The opinion of the experienced District Judge, who heard the testimony, was as much in defendant's favor as the opinion of the majority of this Court is in favor of the plaintiff. We firmly believe that had this Court been privileged to see and hear the witnesses, it would have reached the same conclusion as the lower court. It was possible for the plaintiff to color and draw inferences from the facts in briefs and argument

in this Court in a manner and to an extent not possible in the trial court, with the result that this Court was clearly misled. It is quite possible that the trial judge might have committed error on some of the numerous branches of the case, but it is unlikely that he should have been so completely wrong as this Court has held.

We believe that a brief review of the pertinent facts, even without argument, would raise sufficient doubt in the minds of the majority of this Court to make the Court wish to reconsider the case, particularly in view of the far reaching importance of the case to the entire motion picture industry.

We recognize that with the large amount of work this Court has to do, the Court can seldom permit cases to be reargued, and especially is this true just before the summer recess. Nevertheless, we feel that the great importance of this case, not merely to the parties who are before the Court, but to the whole industry, should induce the Court to grant our request.

Should it not be possible to reargue the case before the summer recess, we respectfully suggest that it be heard as soon as the Court reconvenes in the fall. This would not result in substantial delay because a petition for writ of certiorari, even if filed now, would not be disposed of by the Supreme Court until sometime in October at the earliest. The Court's attention is also called to the fact that Judge Campbell's decision was made on August 14, 1933 and that the plaintiff failed to take an appeal until December 18, 1933, or over four months. Had the appeal been promptly taken, it would have been heard by this Court much earlier in the year and the Court would not have been called upon to consider a petition for rehearing just prior to adjournment.

We desire to reargue three points, as follows:

1. The patented process had nothing whatsoever to do with the successful commercialization of sound-on-film talking pictures.

2. There was no patentable invention in the process.

3. The Patent Office proceedings and the De Forest interference do not create but, rather, rebut any presumption of validity of the claims.

1. The Patented Process Had Nothing Whatsoever to do With the Successful Commercialization of Sound-on-Film Talking Pictures.

The opinion states (pp. 2, 3):

> "Makers of talking motion pictures, including the Western Electric Co. and its associates, during the period following the application for this patent tried, but until appellant exhibited this process, accomplished little with the development of sound on film. While all apparatus necessary to practice the present invention was at hand and owned by the Western Electric Co. and its affiliates, no one solved the film problem presented by the requirement of different treatment for sound and picture records. The difference in treatment was necessary to avoid distortions of one or the other or both in reproduction. The engineers of the Western Electric Co., in this period, struggling for the solution of the problem of sound on film development, turned to sound on disc. The first successful talking motion picture in this country was produced by sound on disc. The process of the patent in

> suit was brought to this country from Germany. Western Electric Co.'s engineers examined and tested it. They thereupon used it and it superseded sound on disc. Its adoption has become universal and speaks for the merit of the inventive thought therein involved. No sound on film was made as this record discloses until the appellant's process appeared."

As we shall show by direct references to the record, the following findings, in the above quotation, are contrary to the record:

1. That the Western Electric Co. and its associates accomplished little with the development of sound-on-film until the appellant exhibited the process of the patent in suit.

2. That while all apparatus necessary to practice the invention was at hand and owned by the Western Electric Co. and its affiliates, no one solved the film problem presented by the requirement of different treatment for sound and picture records.

3. That the engineers of the Western Electric Company were struggling for the solution of the problem of sound-on-film development, and turned to sound-on-disc.

4. That no sound-on-film was made until the appellant's process appeared.

The only thing we can think of that could have caused the Court to make these findings is that the Court must have believed that the Western Electric Company copied the patented process from the patentees in January, 1927 when the patentees' apparatus was demonstrated at the Fox Film Company here. **If the Court had that impression, the record shows it to be wholly erroneous.**

The patented process was independently disclosed by the Western Electric engineers without any knowledge of the patentees' work, long prior to the 1927 demonstration by the patentees. The process was disclosed by Dr. Wente in his application which was filed on April 8, 1924 (II, 604), over two years and a half before the 1927 demonstration. There is, and could be, no dispute as to this fact. Moreover, the patented process was used by Dr. Wente in 1925, long before he ever heard of the patentees' work. He testified (I, 322, 323):

> "I have described the work of the Western Electric Company that they did on this sound-on-film method and on photographing the sound and the pictures on separate negatives, **and then by 1925 joining them together on the same positive, and on the same side of the same positive.**
>
> "Q. 66. Up to that time or thereafter did you have any knowledge of the work of Vogt and his associates or any of the Tri-Ergon companies anywhere in the world?
>
> "A. **I had no knowledge.**"

Moreover, as Wente also pointed out on cross-examination, (I, 369):

> "x-Q. 281. When was this perfectly obvious? A. **Well, in 1920, at any rate, we had considered the question of having the sound and picture record on a separate film for reproduction or on a single film. As far as the recording was concerned, we at all times felt that we should record separately and we always did so.**
>
> "x-Q. 282. Well, was your statement intended to be one or not, that in your opinion this idea of taking on separate films the sound and picture and then printing them on one common film was perfectly obvious in 1920? A. **Absolutely.**"

Certainly if Wente had thought there was any invention in that idea he would have submitted it

to the patent department in 1920, which he did not do. He said (I, 372):

> "I never supposed at any time, that this general problem of taking separately and printing at the same speed, that there was anything new in that, or I would have submitted it to the patent department."*

And in 1923 Wente recorded sound and pictures on separate films and developed them separately. He testified (I, 358):

> **"When I, in the laboratory, took the sound and pictures on separate films and kept them separate throughout,** the stock which I used for the sound record **at that time, in 1923,** was negative stock, the same as the picture stock.
>
> "As to those sound and picture records when they were taken on separate films and kept on separate films, I do not know whether I personally developed them, but **I saw them being developed, they were developed separately. They would be developed in a different developer. The rea-**

---

* No novelty, in that respect, was asserted by Wente in submitting his work to his company's patent department. The latter, in drafting his application, inserted a claim covering the separate development of the negatives and printing on one positive film. *They certainly would not have done that, had they known of the Bullis patent for the separate development.*

This Court held (Opinion, p. 4) that the Western Electric Company, which is defending this suit, is hardly in a position to question validity because of Wente's application, citing *Dubois* vs. *Kirk*, 158 U. S. 58; *General Co.* vs. *Steber Co.*, 194 Fed. 99, decided by this Court, and a Pennsylvania District Court case. We do not believe the Court would have made this holding, had it realized that the *Dubois Case* only holds that under such circumstances the defendant can not deny the *utility* of the alleged invention. *It did not hold that the defendant can not deny validity.* The law on that subject is stated by the Supreme Court in *Haughey* vs. *Lee*, 151 U. S. 282, as follows (p. 285):

> "There is no merit in the proposition made in the second assignment of error, that defendants are estopped from asserting that there is no patentable novelty in plaintiff's invention, by their conduct in seeking to procure, through one of their employés, a patent for substantially the same invention. *Whether or not there is*

> **son why we developed them—there is one reason we couldn't develop them any other way, that is, the facilities that we had was a tray developer. We developed one strip of film in a tray, and we would throw that out and make fresh developer for the other film."**

The Western Electric Company was at no time struggling with or concerned at all about any problem having anything to do with the process of the patent in suit, but was working on very real problems relating to the electrical features of sound recording and reproduction. As Wente testified (I, 355):

> **"We devoted all our attention to the making of and the improving of the record. Whether we were going to have pictures with it, in what manner, whether on the same film or on different film, that was thoroughly evident we had no concern with [it]."**

---

any inconsistency in trying, at one time, to get a patent for a supposed invention, and in afterwards alleging, as against a rival successful in obtaining a patent, that there is no novelty in the invention, it certainly cannot be said to constitute an estoppel. Besides, the defence of want of patentable invention in a patent operates not merely to exonerate the defendant, but to relieve the public from an asserted monopoly, and the court cannot be prevented from so declaring by the fact that the defendant had ineffectually sought to secure the monopoly for himself."

We also respectfully call the Court's attention to *Smokador Mfg. Co.* vs. *Tubular Co.*, 27 F. (2d) 948, decided by Judge Thomas in 1928, and the opinion by Judge Putman in the First Circuit Court of Appeals, in *Osgood Co.* vs. *Metropolitan Co.*, 75 Fed. 670, 673, cited by Judge Thomas. *The decision of this Court as to the Wente application is in direct conflict with the decision of the Supreme Court in Haughey* vs. *Lee, supra.* The soundness of the Supreme Court's holding in that case is clearly demonstrated in this case in which the entire motion picture industry would be prejudiced merely because one company filed a patent application for the same alleged invention. Invention cannot be created by estoppel. There could be no true estoppel in any event in this case because the defendant is the Paramount Company. The Wente application was filed by the Western Electric Company. The latter's subsidiary, Electrical Research Products, Inc., is defending the case but it is not a party defendant.

And (I, 359):

> "I have no recollection that we made any sound and picture records in 1924, because **we were working with the sound principally.**"

Also (I, 351):

> **"There were quite a large number of problems that had to be worked on in getting the apparatus for the recording, of the study of film emulsions, quite a lot of work we did for several years there."**

We have reproduced at the back of this petition defendant's Exhibit O, which shows the Western Electric sound-on-film recording system. If the Court may visualize by means of this diagram the enormous amount of work, which was done by the Telephone engineers over a period of years and at great expense, in perfecting the numerous electrical devices entering into this and also the Western Electric reproducing system, and which made possible the success of sound pictures both disc and film, we are sure the Court will not believe that the work of the patentees of the patent in suit contributed anything to that success. The work of the Telephone engineers on the devices shown in the diagram is described by Wente at pages 307 to 320 of Volume I.

This Court said in *Western Electric Company* v. *Wallerstein,* 60 F. (2d) 723, 724, that the success of sound pictures was due solely to high quality reproductions. It was to the attainment of this high quality that the Telephone engineers devoted their attention. They developed to an almost unbelievable degree of perfection and fidelity the vacuum tube amplifiers, microphones, and loud speakers which are vital parts of the Western Electric systems. **The plaintiff itself admitted that the Western Electric amplifiers**

were indispensable (I, 108). And, as Wente testified (I, 378-379):

> "Rd-Q. 319. In your opinion, would sound pictures have been successful commercially without the developments to which you have referred of the Western Electric Company?
>
> "A. No, I think not, unless similar developments had been made somewhere else.
>
> "Rd-Q. 320. Had any such development been made at the time that the Western Electric system was introduced? A. No."

It was the Western Electric apparatus embodying these electrical developments which Electrical Research Products Inc. licensed the defendant in this case to use "as the 'Western Electric sound system'" **and not the process of the patent in suit,** as the Court apparently thought when it said (Opinion, p. 2):

> "The Western Electric Co., and its wholly owned subsidiary, Electric Research Products Inc., licensed its licensees, including the appellee, **to use the process as** the 'Western Electric Sound System' ".

There is nothing in the record to support the Court's statement that the Western Electric Company or its subsidiaries licensed the use of this process by anyone, and the contrary is the fact.

The Western Electric Company did not turn to sound-on-disc because of any problem it had encountered with sound-on-film. The sound-on-disc and sound-on-film developments went along hand in hand in the Bell Laboratories, one being handled by one group of engineers and the other by another group (I, 313). The disc system happened to be the first to be put in use commercially; it had the immediate advantage that it

could be used with the picture films and projection equipment already in use.* This occurred in August, 1926, but, as Drake testified, the Western Electric Company was in a position to manufacture and put out the sound-on-film system the same year (I, 338). **The Fox Film Company acquired its license to use the Western Electric sound-on-film system in December, 1926. The Fox Film Company was not then and is not now connected in any way with the plaintiff.** Plaintiff's President, William Fox, was President of the Fox Film Company in December, 1926, when this Western Electric license was acquired, but is no longer connected with the Fox Film Company.

The commercial introduction of the Western Electric sound-on-film system was not delayed because of any lack of knowledge of the patented process. That had been independently disclosed by Wente in 1924 and practiced by him in 1925. **The sole and only reason that the Western Electric talking motion pictures were not introduced commercially until 1926 was to permit the attainment of the high quality of sound reproduction which is a commonplace today but which was**

* The sound-on-disc form was introduced first commercially because the apparatus was ready for manufacture. The Western Electric electrically recorded disc records for phonographs had already been introduced commercially by the Victor and Columbia Phonograph Companies (I, 313, 314). The sound-on-disc form involved merely the attachment of a phonograph type of turntable to the existing motion picture projectors and no modification of the projectors or film printing machines. It involved no change in the size of the picture on the film and enabled existing films to have sound reproduced with them. The sound-on-film form on the other hand involved new recording equipment and new recording technique with which the motion picture producers were not familiar and also changes in the existing film printing machines. Quite naturally the simplicity of the disc system appealed to the producers as did also the fact that the technique of recording disc records was already in commercial use and well understood.

essential to success. This the patentees wholly lacked and the process of the patent in suit most certainly did not provide.

The patentees made their invention in 1921 but sound pictures did not succeed until 1926 and then only at the hands of the Western Electric Company. If the process of the patent in suit was holding back talking motion pictures, why did not the patentees' system attain commercial success in Germany in 1921 and spread all over the world before 1926, as did the Western Electric system in the very short period following its introduction? If the work of the patentees of the patent in suit was satisfactory, why did not the leading motion picture producers in the United States acquire licenses from the plaintiff instead of from the Western Electric Company? The plaintiff was formed for the express purpose of commercially exploiting the Tri-Ergon "inventions, improvements, and processes" in the United States (Ex. 8, p. 8) but plaintiff's proofs fail to show that it has a single machine in use anywhere or that it has any licensees. The plaintiff has done nothing commercially but has confined its activities to patent exploitation by means of litigation. On the other hand, the record shows that the leading motion picture producers in the United States use the Western Electric recording system and apparatus (I, 332).

The patentees' attempt to introduce their sound-on-film system in Germany prior to 1926 flatly failed and their unsuccessful experiments would never have been heard of again had it not been for the world-wide interest resulting from the Western Electric Company's success, which alone made it possible for the patentees to revive their unsuccessful experiments.

It is not true that no sound-on-film was made until the appellant's process appeared. The patentees not only admitted this but stressed the fact in the De Forest interference. They said (Ex. I, Part 4, p. 43):

> "**It will be understood that the recording of sound on film was a well understood and known accomplishment at the date [1921] of De Forest's conception of the invention at issue. It is disclosed in numerous patents and had actually been accomplished not only by others but by De Forest.**"

Sound was recorded photographically by the Western Electric Company, as early as 1913 (I, 312). And as Wente also testified he recorded sound-on-film talking pictures in 1923 (I, 352).

In the case of *Stanley Co. of Am.* v. *General Talking Pictures Corp.*, 47 F. (2d) 817, which involved a patent applied for (in 1913) nine years before the application for the patent in suit, the Court of Appeals for the Third Circuit held that sound-on-film had long been known. It said (817):

> "**We refer to this in order to now dispel any impression that the patent here involved is the foundation stone, so to speak, of the 'talkie-movie' art.** Now in sound reproduction two types of records have **long been known**, namely, the disc system, which is used in victrola practice, with which we are not here concerned only to say the sound waves are there recorded by a cutting stylus on a wax record and reproduced by contact with a needle. The other **known method**, and with which we are here concerned, is where the sound waves are photographed on a sensitized film from which film record they are reproduced by action thereon of a beam of light."

But even more important, the Court has overlooked the fact that the Fox Film Company, which was the first motion picture producer to become interested in sound-on-film, successfully recorded sound-on-film in its studio in New York in the summer of 1926 and reproduced it commercially in theatres in the fall of 1926, considerably before the patentee, Engl, came to this country. Joy, plaintiff's own technical man, who was formerly with the Fox Film Company, testified (I, 110):

> "This apparatus that was brought from Germany that I have been testifying about was brought in 1926. It arrived in New York the latter part of December, 1926. **And prior to that time the Fox Case Corporation had in this country recorded sound-on-film. That Fox Case Corporation was the sound picture subsidiary of Fox Film.**"

And, (I, 111):

> "The first sound pictures which were recorded in Fox Studios in New York were recorded entirely by Case apparatus. **That was in July, 1926.**"

Engl gave his demonstration here in January, 1927, but the Fox Film Company did not use the process of the patent in suit for some time thereafter. Plaintiff's own witness, Smith, who was in charge of the Fox Film Company's sound-on-film business during this period, repeatedly pointed out that the sound-on-film productions of the Fox Film Company, which were recorded on single film, were responsible for the success of sound-on-film. **Sound-on-film had succeeded here with the aid of the electrical devices provided by the Western Electric Company, before the process of the patent in suit was ever**

adopted commercially. Smith testified (I, 421, 422):

> "When Fox Case started out they had what they called the Movietone wagons, going around to take sound pictures. Those were their equipment for the Fox Movietone News. **The Fox Movietone News was probably the biggest, in my opinion, Fox Movietone News was the biggest single reason for the successful introduction of sound into the motion picture business, because it showed not only that there was a tremendous demand on the part of audiences for sound, they responded tremendously to such a feature, but it showed it was practical to record pictures with sound anywhere anything that could be photographed in silence, and today that has been proved to be the case.**"

And, (I, 423):

> "The first time sound news shots were taken was at West Point in March, 1927. That crew immediately left for Italy, and actually recorded Mussolini in Italy in May, 1927. At the same time, toward the end of May, 1927, one of the great historic events of all time, Lindbergh's flight to Europe, was actually recorded by Fox Case sound-on-film, and the films were thereafter shown. **That was one of the biggest news stories ever photographed, and was one of the reasons for the tremendous interest in sound pictures. To show how feasible sound-on-film pictures were at that time, the Fox Laboratory got their negative in the morning, and in the afternoon we were showing the picture on Broadway.**"

The Fox Film Company did not record its commercial productions on separate films and print them on a single positive film until considerably later. As Smith testified (I, 426):

"Q. 47. Can you state when the Fox Case started using the method of taking the sound and picture records on two separate negatives, and then separately developing them and then printing the sound and picture records on one positive? A. I do not believe Fox Case, as I remember it, **Fox Case did not do that until we went to the coast, Hollywood, where for production purposes, sound and picture recording on two different pieces of film were very much desired.**"

This was in 1928, as Joy testified (I, 112). **Joy also admitted that the Western Electric Company developed its "own standard apparatus"** (I, 113). That apparatus was entirely different from the apparatus demonstrated at the Fox Film Company by the patentee, Engl. What Engl had was a sound recorder and camera combined in one machine. With such a machine the sound is recorded right where the action takes place in the studio. It therefore did not have the advantages provided by the Western Electric system which permits the recording machines to be placed elsewhere in the studio. This is accomplished by the electrical interlock which the Western Electric Company supplied the Fox Film Company in 1928. As Joy said (I, 112):

"The Western Electric Company furnished the Fox Case Company with an electrical interlock as between the picture camera and the sound camera early in 1928."

And, (I, 113):

"x-Q. 63. **The interlock made separate films possible with the sound recorder off the set, did it not?** A. **Yes, that is true. That was an advantage.**"

Smith also testified that the commercial films produced by the Fox Film Company prior to

Engl's demonstration were superior to the Germans' films. He said (I, 432):

> "I can only repeat what I have said before, that in my opinion, at that time, and that time covers a period of several years, **the quality of Fox Case sound was superior to the quality of any other sound on any other system manufactured by anyone else, either sound on film or sound on disc.**"

And (I, 422):

> "About the Tri-Ergon apparatus, the system being brought over by Mr. Joy, Mr. Joy left the United States either the end of July or—I remember distinctly that the Tri-Ergon equipment landed in New York, either in the middle of December, 1926, or toward the close of that month. It was immediately set up first at 10th Avenue and 55th Street studio, which was a very large floor, and I remember a lot of the equipment being scattered all over the floor. And then later, it was brought down and used in competition with or in comparison with the Fox Case equipment in the studio at 10th Avenue and 54th Street.
>
> "I did have occasion to compare the merits of the sound and pictures, the Fox Case sound and pictures with the Tri-Ergon system and the disc sound pictures, that system of Western Electric at that time.
>
> "Q. 34. To what extent did you have occasion to observe it? A. Well, practically to a daily extent. That was my only work for several years.
>
> "Q. 36. And what is your opinion as to the relative merits of the three, as you saw them at that time? A. **I think easily the Fox Movietone or Fox Case which it was was No. 1, as being best in quality.** At that time I would have preferred the Tri-Ergon sound on film to the Western Electric sound on disc."

Plaintiff's own witness thus admitted, while being examined by plaintiff's counsel, that the Fox Movietone pictures, recorded on single film, were superior to anything that the German patentees were able to show in 1927, although the latter employed the process of the patent in suit and had been experimenting since 1918.

And Drake, Vice-President of Electrical Research Products Inc., who also heard the Tri-Ergon apparatus demonstrated, testified (I, 328, 329):

> **"The reproduction was very unsatisfactory; it was not of good quality. He [Engl] had considerable difficulty in making the apparatus function."**

The Fox pictures were recorded and reproduced with the aid of the electrical devices developed by the Western Electric Company, which were responsible for their good quality. The process of the patent in suit was not used. The Fox Film Company acquired its license from the Western Electric Company in December, 1926 (I, 431). The patentee, Engl, brought his machine to the Fox Film Company in 1927, but the Fox Film Company rejected it after determining that it was inferior to the Fox Case and Western Electric system, which the Fox Film Company was then using, continued to use and has used ever since. The fallacy of plaintiff's position thus clearly appears.

The patentees did not advance the art. They did nothing which could possibly justify the far-reaching monopoly which the decision of this Court has given them.

2. There was No Patentable Invention in the Process.

The opinion states (p. 2):

> "The **problem** sought to be solved by the patent was **bringing together** on **one** positive film the picture record, which requires one type of development, and a sound record which requires a different type of development. **Its accomplishment** marked an important advance in the art."

We respectfully submit that no such problem existed. The "bringing together on one positive film" of the picture and sound records was not a problem. The prior Greensfelder patent No. 1,254,684 (II, 701) contains the following statement (p. 3, l. 128-p. 4, l. 8):

> "A developed negative containing the rows of '**sound** marks' but on which the spaces for the pictures are blank, is superimposed upon a developed negative properly pieced and joined and having the **pictures** photographed thereon but having spaces for the 'sound marks' left blank, and **a print is made from this combined negative which will give a positive** containing the pictures 4 and the corresponding rows of 'sound marks' 3, shown in Fig. 3."

The only act or operation involved in the "problem" was printing the two negative films on one positive film. Plaintiff's own counsel admitted at the argument in the lower court that there was no problem in this printing operation. He said (Tr. p. 15):

> **"Well, we never have suggested that we ever invented any idea of printing."**

This being so, what invention could the patentees have made over the prior Bullis patent No. 1,335,651 (II, 714), **which disclosed much more completely than the patent in suit the simultaneous recording and separate development of sound and picture films?** Certainly there was no novelty in the idea of having the sound and pictures on the same positive film.

Bullis preferred to use two final positive films instead of one because this enabled him not only to give separate development treatments to each of the negatives before printing the positives but also to the final positives (II, 719, ll. 78-99). It is not that Bullis overlooked the possibility of printing both negatives on the same film but merely that he preferred to carry out, even as to his final prints, "the special individual handling or treatment necessary to the best results" (II, 719, ll. 78-99). Printing both negatives on one film necessitated a compromise which Bullis did not wish to make. The separate development operation of the process of the patent in suit was disclosed much more completely by Bullis than by the patent in suit.

That there was no patentable novelty in the step of the process which involves printing both negatives on the same film is also brought out by consideration of a further statement in the opinion of the Court, as follows (p. 4):

> "The result is accomplished by recording the sound and pictures on separate films; then separately developing the sound and picture films in separate developer solutions under development conditions appropriate to the requirements of each. A single positive print is made from these two separately developed negatives, by printing the sound and picture sequences side by side **on the same face** of the positive film."

The Court here limits the printing operation to printing on the same face of the positive film. It, then, becomes pertinent to inquire what the patentees taught as to this. We quote below the patentees' application as originally filed:

> "In the production of speaking films it is of great advantage especially from the point of view of use, to arrange the sound sequence and the picture sequence upon one and the same material separate (film).
>
> "In this procedure, however, there frequently occur in consequence of the changing lighting conditions in the cinematographing process, changes in the degree of light and the bromide of silver layer, and this causes the picture sequence to be either overlighted or underlighted."
>
> "As the same film, however, bears close to the picture sequence the continuously normally lighted sound sequence, these differences cannot be removed in the case of combined negatives, by developing, weakening, strengthening and so forth.
>
> "They can only be removed by subjecting the underlighted or the overlighted negative places to separate corresponding treatment.
>
> "Technically, this treatment is practically impossible so long as the two sequences are photographed upon the same film.
>
> "According to the present invention the difficulty is overcome by either employing entirely separate films for the production of the negatives, or films which are connected during the photographing, but which are separated from one another before the developing.
>
> "The synchronism is assured in both cases by the perforations and by corresponding marks. The production of the positive films can take place by copying the two negative films preferably consecutively upon the same positive films.
>
> "One can, however, also unite previously the two negative films longitudinally to-

gether, and then copy this so united negative in the usual manner."

This original disclosure can be searched in vain for any statement whatsoever that the two records are to be printed on the same face of the film, to say nothing of any emphasis upon this as an essential or important part of the supposed invention. Plaintiff's own expert could not find any such statement in the application and resorted to inference and to the prior art when cross-examined about it. Nor is any such statement to be found in the specification of the patent as issued. Plaintiff's witness, Ballard, testified (I, 89):

"x-Q. 207. Do you find in the original specification as filed any statement that the sound and picture records are both printed on the same side or face of the final positive film?

"A. I find that by **inference**, sir.

"x-Q. 208. What do you get the inference from?

"A. From line 79: 'One can, however, previous to the printing, unite longitudinally together the two developed negative films and then copy this so united negative film in the usual manner.' **The usual manner was to print the sound record and picture record on different longitudinally exposed portions of the film.**

"x-Q. 209. **It was usual in the prior art to print them on the same side of the same film?**

"A. **In connection with the single film system, it was.**"

If the "usual manner" in the prior art can be resorted to by the patentees, why cannot that same "usual manner" be used by the defendant?

Not only was this the common practice, but it was also an old and well-known practice to print separate pictures from two separate negatives upon the same side of a common positive (see pp. 25-28, *infra*). So far as the **process** is concerned, it obviously makes no difference whether the negatives are sound records or picture records or any other records.

And in the Greensfelder patent we have a picture negative and a separate negative of **sound** marks, both photographically printed upon the same side of a common positive. Considered as a step in a process, the "problem" of "bringing together" upon the same side of a common positive the records on separate negatives requires no new exercise of inventive ingenuity by reason of what **appears** on the respective negatives. Obviously, it makes no difference whether the negative sound record is a phonographic sound record or any other kind of mark representing sound. If one wished to produce a positive print from two separate negatives, one taken with ordinary light and the other with x-rays, and this had never been done before, the fact that one of the negatives was an x-ray picture would not create a new problem of bringing these negatives together upon a common positive, nor would it require any inventive ingenuity for its solution.

The Walker patent No. 1,186,717 (III, 852) clearly shows how sound can be printed, photographically, alongside of the pictures on the same face of the positive film.

Still this Court has distinguished the Craig patent No. 1,260,337 (III, 861) because "he wanted to print on opposite sides" (Opinion, p. 7). **Is it conceivable that a monopoly so vast that it will demand tribute from every motion picture producer in the United States can be**

upheld on any such distinction, and especially where plaintiff's own expert has admitted there was nothing new or novel about it?

Craig's separate sound and picture negatives were recorded separately, separately developed and then printed on the same positive film (I, 452). **This fully anticipates any patentable novelty in the patentees' process as a process.** As stated in Walker on Patents, 6th Ed. § 19:

> "The generic definition of a process is 'an operation performed by rule to produce a result.' "

The invention, if any, must reside in the steps or operations of the process. The patent in suit disclosed only three operations, namely, recording on separate film, developing separately, and printing on one positive film. The result was a composite print of the two records. Craig performed exactly the same operations and obtained exactly the same result, a composite print of the two records. The fact that Craig's records are on opposite sides of the film does not make them any less a composite print. **The steps in Craig's process are identical with those disclosed in the application for the patent in suit.**

To sustain a process patent, it is not enough that the product produced by the process may be different in some respect from that produced by a former process. **The process itself must possess novelty.** In the leading case of *Brown* v. *Piper,* 91 U. S. 37, the patent in suit was for a process of preserving fish. Referring to a prior patent, the Supreme Court said (p. 41):

> "Here was the application of the requisite degree of cold exactly in the manner called for in the specification of the appellee.

> "This is hardly denied; but it is insisted that the process was never applied by the witness to the preservation of fish and meats.
>
> "The answer is, that this was simply the application by the patentee of an old process to a new subject without any exercise of the inventive faculty, and without the development of any idea which can be deemed new or original in the sense of the patent law. The thing was within the circle of what was well known before, and belonged to the public. **No one could lawfully appropriate it to himself, and exclude others from using it in any usual way for any purpose to which it may be desired to apply it.**"

Clearly any invention that might have existed in the process of the patent in suit was anticipated by Craig. The application for the patent in suit stated only that the negatives should be printed on the same positive film; not that both must be printed on the same face of the positive film.

The opinion states (p. 7):

> "Craig did not show or describe anywhere a sound and picture record on a single film where the sound and picture records did not overlie each other. In the process he was attempting to operate, he wanted to print on opposite sides. The experts agree that this is wholly inoperative."

Defendant's expert, Jones, the chief physicist and head of the Physical Research Laboratory of the Eastman Kodak Company, did not agree that Craig's **printing process** is inoperative, as, of course, it is not. Nor did he agree that Craig's composite print with the records overlying each other would not be useful when properly made. (See I, 178, 269, 270, 271.)

The patentees of the patent in suit disclosed no process invention over either the prior Bullis or Craig patents.

The opinion seems to us to show that the Court approached the patent in suit from the wrong point of view. The **product** of the patented process is used in exhibiting talking motion pictures, but the question of patentability of the **process** must be determined by the state of the art of composite printing. The application for the patent in suit was classified and examined in the Optics and Photographic Division of the Patent Office. Its own title shows conclusively that it was correctly classified. It is entitled, "Process For Producing **Combined** Sound and Picture **Films.**" **The patented process is merely another instance of the old and well known practice of composite printing.**

The authority of the statements of defendant's expert, Jones, on this subject, is of the highest order. Jones is not a professional expert and, as the record shows, he testified in this case because he was directed to do so by the Eastman Kodak Company (I, 241). Jones testified as follows (I, 166, 167):

> "Q. 103. Does the process of the patent in suit involve any photographic operations which are not involved in the ordinary art of composite printing, and if it does involve some additional operations, tell us what they are? A. **It involves nothing other than that known in the art as composite printing.***
>
> "Q. 104. How about in composite printing using and subjecting the two negatives to different lengths of development? Was that done or was it not done? A. **Very common.**

* See the *dictionary* definitions of *1894, 1896, 1906, and 1912* (I, 161-166).

"Q. 105. Did you do that composite printing yourself prior to April, 1921? A. Yes, I have often made prints, printing in clouds into landscapes without the clouds and other types of composite printing. **It was commonly used in pictorial photography.**

"Q. 106. How early did you do that? How far back did you do that work yourself? A. Oh, I imagine about in **1900.**

"Q. 107. And the Eastman Company, did it have any experience, so far as you know, with composite printing prior to April, 1921? A. **Well, of course, the art and practice of composite printing has been so general that the Kodak Company has made materials which have been used for that purpose, in many cases special materials for the practice of combination printing.**

"Q. 108. Now, will you state the steps involved in making composite prints such as you did them prior to 1921, and such as Eastman did them prior to 1921, beginning with the making of the separate records? A. **Well, two or more negatives are exposed, either on the same or different objects. These exposed negative materials are then developed separately in such a way as to give images of the character required for the subsequent operation of making the combination print. These are then printed together on a single piece of photographic material. They may be either adjacent, juxta-posed, or superposed, in register, on the same face or on opposite faces, as the case may be. There are any number of possibilities of combining the negatives in making combination printings."**

And the Biograph Company, in making motion pictures, took two motion pictures, each on separate negative films, developed them separately, and printed them on the same side of one positive film (Nonnenbacker, I, 128-134).

The admissions which the patentees made in the interference with De Forest are binding upon them. They said (Ex. I, Part 4, pp. 2, 3):

> "It will be observed that the invention at issue is **not** one—
>
> "(1) merely for the recording of sound on film, nor
>
> "(2) merely for the recording of pictures on film, nor both on the same film, nor
>
> "(3) **merely for recording sound and pictures on separate films so as to be able to develop them separately and then project them together, nor**
>
> "(4) **merely for printing sound and pictures from separate negatives upon a single film.**
>
> **"Each of these ideas, separately and collectively, was old prior to the conception date of either party, neither of which goes back of 1921. There are issued patents of record describing each of these four ideas, and each was a well recognized part of the art prior to the date of either party to this interference. This cannot be disputed. See for example, Greensfelder No. 1,254,684 (starting p. 3, line 92, and p. 5, lines 13 and 128). See also in addition De Forest's patent No. 1,446,246, filed in 1918, for the recording of sound."**

This is a clear admission by the patentees themselves that all three steps of their separate film process were old in the very same combination. The admission includes under (3) exposing on separate films followed by separate development, and under (4) the printing of the separately developed negatives on a single film.

Clearly, the patentees made no contribution to the photographic art. The three steps of the

patented process were old and well known in the same combination and order utilized by the patentees. No new principle, relationship or operation was involved. To hold under these circumstances that there was invention in the process is clearly contrary to the decision of the Supreme Court in the well-known *High Vacuum Case*, 283 U. S. 664, 678, 679.

Instead of constituting an important advance in the art, as the Court has held, the patent in suit added nothing whatsoever to existing photographic knowledge.

3. The Patent Office Proceedings and the De Forest Interference Did Not Create But, Rather, Rebut any Presumption of Validity of the Claims.

In the opinion, this Court said (p. 1):

> "The application for the patent was filed March 29, 1922 and granted September 29, 1931, after a long interference proceeding with De Forest patent No. 1,489,314, which was finally decided by the Court of Customs and Patent Appeals in appellant's favor."

And, (p. 10):

> "The interference between the application in suit and the De Forest patent No. 1,489,314 was won by the patentees in the tribunals of the Patent Office and the Court of Customs and Patent Appeals. The De Forest patent was subsequent to the patent in this suit."

From this it would seem that the Court considered that the De Forest interference and the decision rendered in it, strengthen or create a presumption of validity of the claims. The con-

trary is the fact. The claims in suit had no real examination in the Patent Office, but were granted under circumstances preventing a consideration of validity.

The De Forest interference was decided in favor of the patentees of the patent in suit by the Court of Customs and Patent Appeals, but the case was not considered by that Court on the merits. As the opinion shows (Ex. I, part 1):

> "At the time of oral argument in this Court, counsel for appellant [De Forest] stated that there were two methods of producing talking moving pictures on the same film, one of which did not comprise photographing simultaneously the picture and the sound upon separate films; that the counts in issue were limited to a method comprising photographing simultaneously the picture and the sound upon separate films; that, as the evidence produced by appellant [De Forest] was not directed precisely to the method of photographing simultaneously the picture and the sound upon separate films, he could not conscientiously ask the Court to consider appellant's evidence as so limited; and that, under the circumstances, he would formally suggest that the decision of the Board of Appeals be affirmed."

The decision of the Board of Appeals was therefore affirmed.

De Forest, thus, **conceded priority** to the patentees of the patent in suit insofar as there was any subject-matter common to the De Forest patent and the application for the patent in suit.

The De Forest interference was not declared until the application for the patent in suit had been pending for several years and had been persistently and consistently rejected by the Patent Office Examiner. The application stood rejected on March 31, 1925 (II, 499), after it had been pending for three years and when the patentees

could have had little hope that it would ever be allowed. They, therefore, dug up the De Forest patent, which had issued nearly a year before, and copied from it the two interference claims which were claims 1 and 3 of the De Forest patent and which ultimtely became claims 3 and 4 of the patent in suit. The patentees made little or no attempt to distinguish the Greensfelder patent, on which their application stood rejected, stating (II, 500, 501):

> "**Further discussion of this reference** [Greensfelder] **seems unnecessary in view of the fact that broader claims than those which have been contained herein are contained in patent No. 1,489,314**, granted to Lee De Forest, on April 8, 1924, for Recording Sound. It appears that claims 1 and 3 of this patent can be made herein, and these claims are added hereto by the present amendment as claims 3 and 4. An interference with the said patent at an early date is requested."

The patentees thus admitted that the De Forest claims were broader than any which they had previously made. The Examiner did not agree with the patentees' casual dismissal of the Greensfelder patent and again rejected the claims on the merits, stating (II, 502):

> "**It is shown to be old in Craig to take separate synchronous sound and picture records simultaneously and to then reproduce these two records on a single record strip. Applicant desires to reprint both records on one side only; but this is the teaching of Greensfelder, note page 3, line 128 to page 4, line 8.**"

The Examiner (Jarboe, the Principal Examiner of the **Optics and Photography Division of the Patent Office**), was the very same examiner who had granted the De Forest patent

(II, 942). **He had allowed the claims to De Forest over the Craig patent only because of his very definite understanding of their limited meaning and he did not propose to have them misconstrued so as to read on the original disclosure of the patent in suit.** He, therefore, ruled that the patentees had no right to make the claims (II, 502).

The De Forest specification (III, 876) also leaves no doubt as to what De Forest understood to be the meaning of the claims. Instead of printing his sound and picture records directly onto a positive film, as in the patent in suit, De Forest introduced the separate and distinct additional step, namely a photographing or re-photographing of the sound record **onto the original picture negative** to obtain "a more exact and faithful photograph containing any details of the finest light variations produced by sound waves" (pat. p. 1, ll. 61-64).

Thus the Examiner, whose regular duty and responsibility it was to pass upon questions of invention in the photographic art, and who had granted the claims to De Forest, ruled unequivocably against any invention in the subject-matter here involved. And he stated in effect that he would not have allowed the interference claims to De Forest in view of the Craig patent had they been intended to cover the subject-matter of the claims in suit. **Certainly, in view of these facts, the force of the Examiner's finding of non-invention is very great. And especially is this so in view of the further fact that in 1913 the Patent Office had refused because of lack of invention to grant claims to Craig for his composite print or process claims like those in suit for printing on the same film.**

Then the plaintiff's attorneys provoked the interference with De Forest and urged that they

had great concern that De Forest claims might later dominate the patent in suit if an interference were not obtained. That was truly fantastic.* The plaintiff's attorneys merely saw the technical advantage which their discovery of the De Forest claims gave them, making it possible for them to eliminate the experienced Examiner who was certain never to allow any claim not limited to the patentees' specific divided film process.

Having failed in getting the Examiner to declare the interference, the patentees' attorneys appealed to the Examiners-in-Chief. The result of their efforts was to raise sufficient doubt in the minds of the Examiners as to the meaning of the De Forest claims to obtain a favorable ruling. By numerous arguments, the attorneys convinced the Examiners that the De Forest patent "may be somewhat vague" (II, 530). In whatever respect the De Forest patent may have been vague, there certainly could have been no reasonable doubt that both De Forest and the Examiner, who allowed the patent, intended and understood the claims to call for the additional photographic step not disclosed by the patentees of the patent in suit.

Under the peculiar rule of the Patent Office practice no question of patentability or invention could be considered in connection with the De Forest claims because those claims were taken from an issued patent (see the patentee's brief, Ex. 3, pp. 62, 63):

> "That this opinion is correct is believed to be confirmed by the decision of the Commis-

* Plaintiff's counsel stated in opening statement to the District Court (Tr. 20, 21) that "I have always had doubts in my mind as to just what those two claims do mean with respect to his [De Forest's] process and ours", and (Tr. 60), "His [De Forest's] idea was totally different from the specific idea or problem that the patentees set up as their illustration of being able to handle these films separately."

sioner of Patents in *Both* vs. *Barr,* 200 O. G. 29:

> 'Where an applicant seeks an interference **with a patent, Held** that the claims in the application should not be rejected unless such rejection is based upon a clear anticipation.'

and *Ex Parte Brinkman* [1914 C. D. 30] cited therein quoting portions of Commissioner Ewing's decision wherein he held:

> 'The question has been raised elsewhere as to the propriety of the refusal by this Office to grant a claim to an applicant which is the same as the claim **of a patent** disclosing **interfering** subject-matter. Without passing on this broad question, it seems to me clear that after a patent has once been granted it is not good practice to reject an applicant seeking an interference, where the rejection is based upon no clear anticipation, but the piecing together of several patents.' ''

Therefore, having decided that the patentees could make the De Forest claims, the Examiners-in-Chief were compelled by this rule to render a purely perfunctory decision as to the patentability of the other appealed claim, that claim being more limited than the De Forest claims by specifying the separate development step. It is most significant, however, that, even under the restraint of the rule, the Examiners-in-Chief expressed doubt as to the patentability of all the claims over Craig and Greensfelder and clearly indicated, it seems to us, that they would have held them unpatentable were the De Forest patent not outstanding. They stated (Ex. 3, pp. 61, 62):

> ''The Examiner allowed these claims [*De Forest's claims*] which is evidence of their patentability notwithstanding that the Greensfelder patent was prior art and which

shows the printing of the two positives side by side, Fig. 5, as does also the Craig patent as above set forth. Greensfelder does not photograph his negatives simultaneously. **While the disclosures in these patents may tend toward a possibility of doubt as to invention being involved in the process defined by claim 1 the grant of the patent to De Forest** and the lack of clear anticipation in either of the references or in their combination as to the addition or substitution of features in one not shown in the other and involving the question of invention vs. mechanical skill, we are of the opinion that claim 1 should be allowed in the absence of more pertinent and anticipatory art **and appellants allowed to be placed in interference with De Forest to determine the question of priority."**

So, the result of the Patent Office proceedings was that doubts were cast on the patentability of the claims, not that they were valid. **If the liberal Patent Office was in doubt as to whether invention was involved, is it not clear that the Court on the present record, in which the prior art is developed much more fully than it was in the Patent Office, should conclude that invention was not involved?**

Respectfully submitted,

CHARLES NEAVE,
HENRY R. ASHTON,
Counsel for Defendant-Appellee.

Certificate.

We certify that this petition for rehearing, in our opinion, is well founded in law and in fact, and that it is not filed for the purposes of delay.

CHARLES NEAVE,
HENRY R. ASHTON,
Counsel for Defendant-Appellee.

June, 1934.

WESTERN ELECTRIC RECORDING SYSTEM

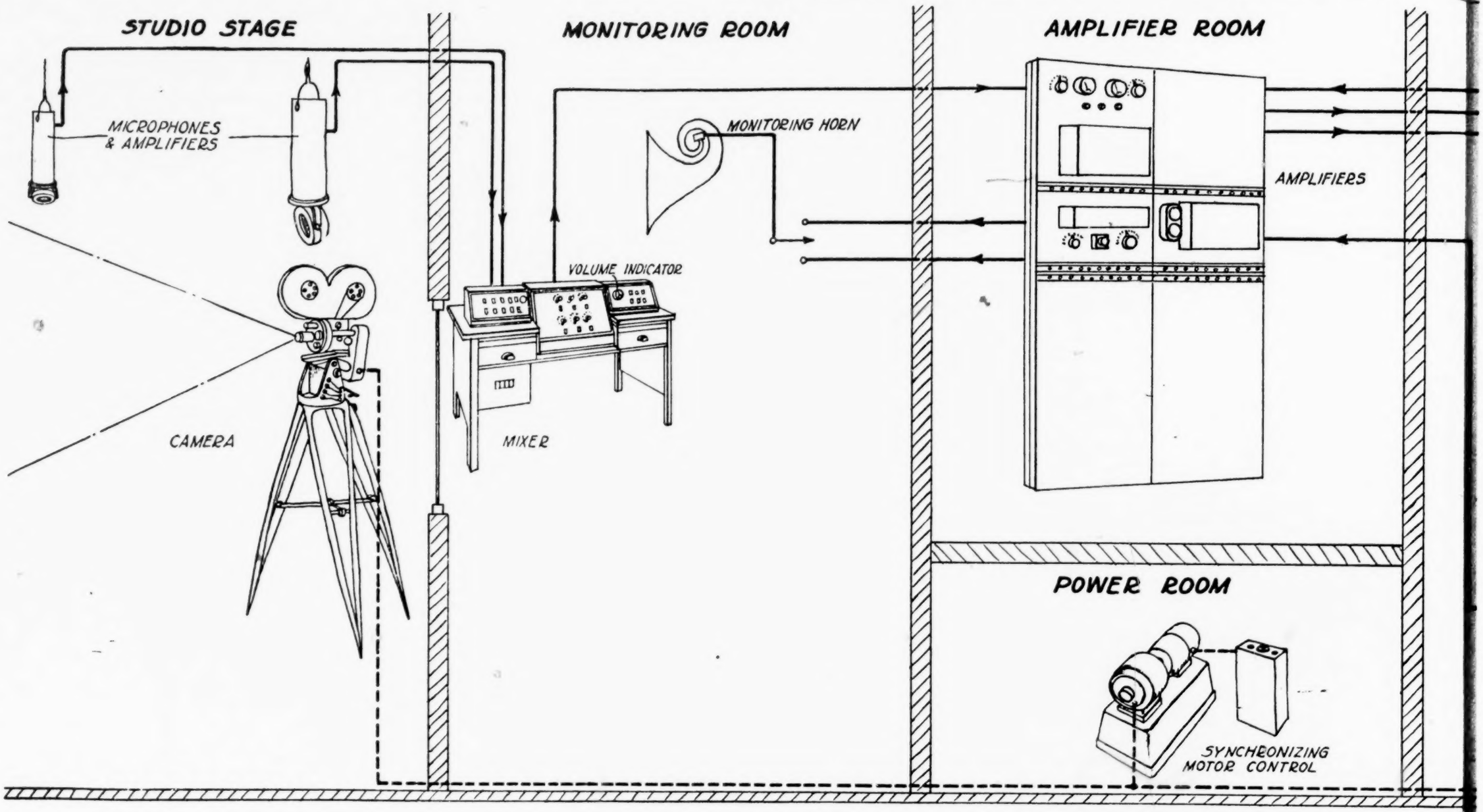

DEFENDANT'S EXHIBIT O

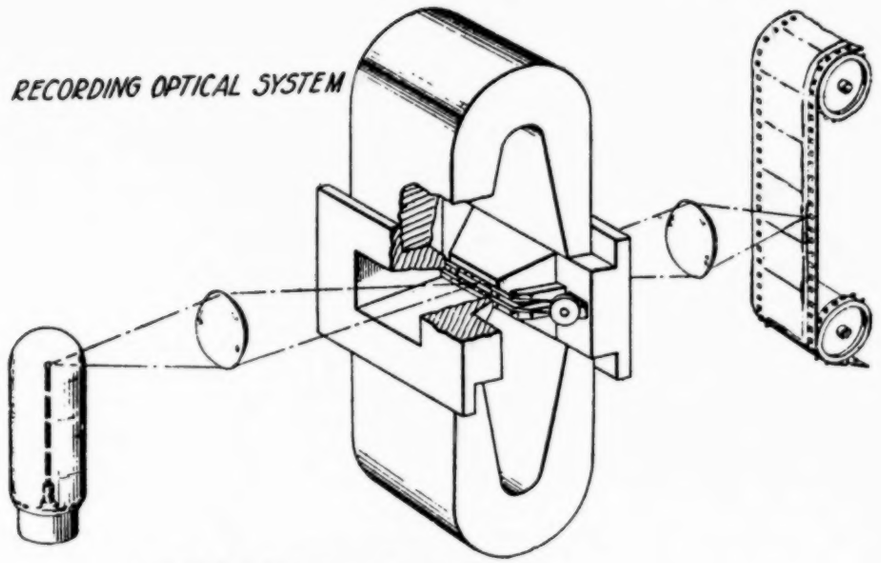

WESTERN ELECTRIC RECORDING SYSTEM

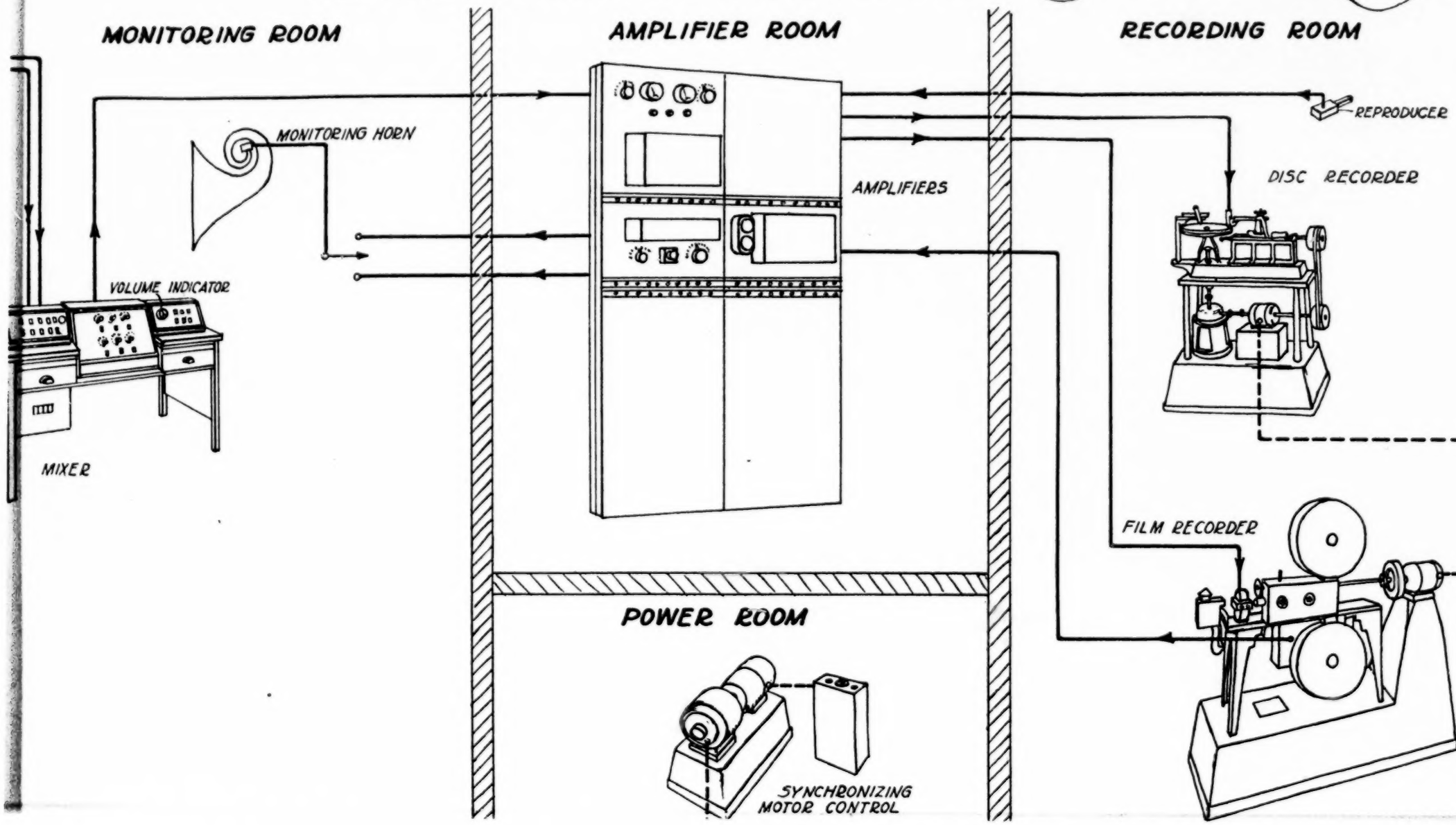

WESTERN ELECTRIC RECORDING SYSTEM

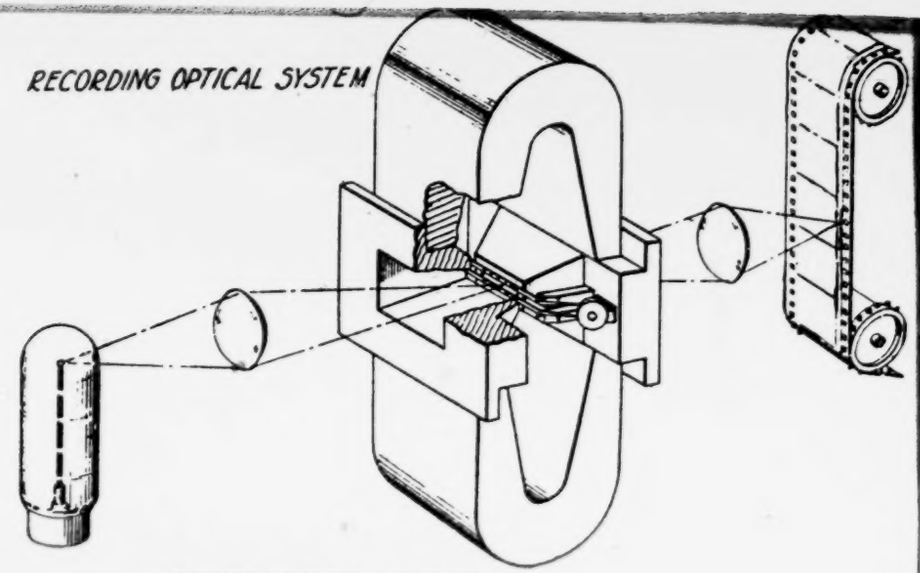

MONITORING ROOM

AMPLIFIER ROOM

RECORDING ROOM

MONITORING HORN

VOLUME INDICATOR

MIXER

AMPLIFIERS

REPRODUCER

DISC RECORDER

FILM RECORDER

POWER ROOM

SYNCHRONIZING MOTOR CONTROL

[fol. 1274] UNITED STATES CIRCUIT COURT OF APPEALS,
SECOND CIRCUIT

At a stated term of the United States Circuit Court of Appeals, in and for the Second Circuit, held at the court-rooms in the Post Office building in the City of New York, on the 2nd day of July, one thousand nine hundred and thirty-four.

Present: Hon. Martin T. Manton, Hon. Thomas W. Swan, Hon. Harrie B. Chase, Circuit Judges.

AMERICAN TRI-ERGON CORPORATION, Plaintiff-Appellant,

vs.

PARAMOUNT PUBLIX CORPORATION, Defendant-Appellee.

A petition for a rehearing having been filed herein by counsel for the appellee;

Upon consideration thereof it is ordered that said petition be, and hereby is denied.

Wm. Parkin, Clerk.

[fol. 1275] [Endorsed:] United States Circuit Court of Appeals, Second Circuit. American Tri-ergon Corporation vs. Paramount Publix Corporation. Order. United States Circuit Court of Appeals, Second Circuit. Filed Jul. 2, 1934. William Parkin, Clerk.

[fol. 1276] UNITED STATES OF AMERICA,
Southern District of New York:

I, William Parkin, Clerk of the United States Circuit Court of Appeals for the Second Circuit, do hereby certify that the foregoing pages, numbered from 1 to 1275, inclusive in 3 volumes, contain a true and complete transcript of the record and proceedings had in said Court, in the case of American Tri-ergon Corporation, Plaintiff-Appellant, against Paramount Publix Corporation, Defendant-Appellee, as the same remain of record and on file in my office.

In testimony whereof, I have caused the seal of the said Court to be hereunto affixed, at the City of New York, in the Southern District of New York, in the Second Circuit, this 5th day of July, in the year of our Lord one thousand nine hundred and thirty-four, and of the Independence of the said United States the one hundred and fifty-ninth.

Wm. Parkin, Clerk. (Seal United States Circuit Court of Appeals, Second Circuit.)

(5184-C)

SUPREME COURT OF THE UNITED STATES

ORDER ALLOWING CERTIORARI—Filed November 5, 1934

The petition herein for a writ of certiorari to the United States Circuit Court of Appeals for the Second Circuit is granted. And it is further ordered that the duly certified copy of the transcript of the proceedings below which accompanied the petition shall be treated as though filed in response to such writ.

CLERK'S COPY.

Vol. IV

TRANSCRIPT OF RECORD

DEFENDANT'S EXHIBIT I

Supreme Court of the United States

OCTOBER TERM, 1934.

No. 254

PARAMOUNT PUBLIX CORPORATION,
PETITIONER,

vs.

AMERICAN TRI-ERGON CORPORATION.

ON WRIT OF CERTIORARI TO THE UNITED STATES CIRCUIT COURT OF APPEALS FOR THE SECOND CIRCUIT.

PETITION FOR CERTIORARI FILED AUGUST 6, 1934.

CERTIORARI GRANTED NOVEMBER 5, 1934.

SUPREME COURT OF THE UNITED STATES

OCTOBER TERM, 1934

No. 254

PARAMOUNT PUBLIX CORPORATION,
PETITIONER,

vs.

AMERICAN TRI-ERGON CORPORATION

ON WRIT OF CERTIORARI TO THE UNITED STATES CIRCUIT COURT OF APPEALS FOR THE SECOND CIRCUIT

INDEX.

	Original	Print
Defendant's Exhibit "1"—Certified copy of papers in DeForest vs. Vogt, Massole and Engl	"A"	1
Clerk's certificate	"A"	1
Opinion, Hatfield, J., Court of Customs and Patent Appeals	"B"	2
Transcript of record	"D"	4
Brief for DeForest	115	94
Brief for Vogt, Massole and Engl	116	94

JUDD & DETWEILER (INC.), PRINTERS, WASHINGTON, D. C., DEC. 31, 1934.

—5752-C.

[fol. ½] No. 439

AMERICAN TRI-ERGON CORP.

v.

PARAMOUNT PUBLIX CORP.

This is the DeForest Interference Record, Defendant's Ex. I, referred to under Point 3 in Defendant's Petition for Rehearing.

[fol. a]

UNITED STATES COURT OF CUSTOMS AND PATENT APPEALS

Patent Appeal Docket

No. 2749

DEFOREST

vs.

VOGT, MASSOLLE AND ENGL

I, Arthur B. Shelton, Clerk of the United States Court of Customs and Patent Appeals, do hereby certify that the attached papers constitute true and correct copies of—

1. The opinion of this court of May 25, 1931, pages numbered 1 and 2,

2. The printed transcript of record, pages numbered 1 to 114,

3. The brief for DeForest, filed January 28, 1931, pages numbered 1 to 22,

4. The brief for Vogt, Massolle and Engl, pages numbered 1 to 64, filed April 18, 1931,

in the above entitled appeal, as the same severally remain of record on the files of this court.

Witness my hand and the seal of this court this twenty-first day of October, A. D., 1932.

Arthur B. Shelton, Clerk. (Seal United States Court of Customs and Patent Appeals.)

[fol. b] UNITED STATES COURT OF CUSTOMS AND PATENT APPEALS

October Term, 1930

Sut No. 2749

Pat. Cal. No. 241

Interference No. 53,103

DEFOREST, Appellant,

v.

VOGT, MASSOLLE, & ENGL, Appellee

HATFIELD, Judge:

This is an appeal from the decision of the Board of Appeals of the United States Patent Office affirming the decision of the examiner of interferences awarding priority of invention to appellee.

The invention relates to a method of producing talking moving pictures, and is sufficiently defined in count 1, which reads:

Count 1. The method of producing talking moving pictures on the same film which comprises photographing simultaneously upon separate films the picture and the sound, and photographing the sound record on an unexposed portion of the picture film.

[fol. c] At the time of oral argument in this court, counsel for appellant stated that there were two methods of producing talking moving pictures on the same film, one of which did not comprise photographing simultaneously the picture and the sound upon separate films; that the counts in issue were limited to a method comprising photographing simultaneously the picture and the sound upon separate films; that, as the evidence produced by appellant was not directed precisely to the method of photographing simultaneously the picture and the sound upon separate films, he could not conscientiously ask the court to consider appellant's evidence as so limited; and that, under the circumstances, he would formally suggest that the decision of the Board of Appeals be affirmed.

Accordingly, it is unnecessary for the court to give consideration to appellant's assignment of error.

The decision is affirmed.

Affirmed.

[fol. d] UNITED STATES COURT OF CUSTOMS AND PATENT APPEALS

Patent Appeal Docket

No. 2749

DEFOREST

vs.

VOGT, MASSOLLE and ENGL

Appeal from Board of Appeals. (Interference No. 53,103.)

TRANSCRIPT OF RECORD

[fol. e] INDEX

	Page
Hans Vogt, Joseph Massolle, and Josef Engl, application, filed March 29, 1922, for process for producing combined sound picture films, serial number 547,860	6
Petition of appeal to United States Court of Customs and Patent Appeals	2
Certificate of Commissioner of Patents to record Specification and claims, as filed	6
Drawing	8
Amendment, April 1, 1925 (claims 3 and 4)	9
Lee DeForest, letters patent number 1,489,314, granted April 8, 1924, for recording sound, application filed July 16, 1921, serial number 485,332	
Printed specification and drawing	10
In the matter of interference No. 53,103, Lee DeForest vs. Hans Vogt, Joseph Massolle, and Josef Engl	15
Printed record on behalf of Hans Vogt, Joseph Massolle, and Josef Engl	15
Index to printed record on behalf of Hans Vogt, Joseph Massolle, and Josef Engl	15

	Page
Printed record on behalf of DeForest	15
Index to printed record on behalf of DeForest	15
Copy of U. S. patent to Elmer Lewis Greensfelder, No. 1,254,684	69
Motion to shift burden of proof, March 9, 1926	81
Decision of examiner of interferences, April 13, 1926	85
Decision of examiner of interferences, July 14, 1928	85
Appeal to board of appeals, July 18, 1928	88
Decision of board of appeals, January 7, 1930	89
Notice of appeal to Court of Appeals, February 24, 1930	93

[fol. 1] IN THE UNITED STATES COURT OF CUSTOMS AND PATENT APPEALS

Patent Appeal Docket

No. 2749

Interference No. 53103. Subject Matter: Recording Sounds.

LEE DEFOREST, Appellant,

vs.

HANS VOGT, JOSEPH MASSOLLE and JOSEF ENGL

To the U. S. Court of Customs and Patent Appeals:

Your petitioner, Lee DeForest, of New York, in the County of New York and State of New York, respectfully represents:

That he is the original and first inventor of certain new and useful improvements in Recording Sounds.

That on the 16th day of July, 1921, in the manner prescribed by law, he presented his application to the Patent Office, praying that a patent be issued to him for the said invention; and that a patent was issued to him on April 8, 1924, bearing No. 1489314.

That thereafter, to wit, on the 10th day of November, 1925, an interference proceeding was instituted and de-

clared between his said Letters Patent No. 1489314, and a pending application of Hans Vogt, Joseph Massolle and Josef Engl, Serial No. 547860, filed March 29, 1922, for a similar invention.

[fol. 2] That the subject matter of said interference, as set forth in the official declaration, was as follows:

"Count 1. The method of producing talking moving pictures on the same film which comprises photographing simultaneously upon separate films the picture and the sound, and photographing the sound record on an unexposed portion of the picture film.

"Count 2. The method of producing talking moving pictures on the same film which comprises photographing simultaneously upon separate films the picture and the sound, and photographing the sound record on an unexposed portion of the picture film between the marginal edge and the sprocket perforations thereof."

That thereafter, to wit, on the 14th day of July, 1928, the case having been submitted upon the preliminary statements and evidence presented by the parties thereto, the Examiner of Interferences rendered a decision awarding priority of invention to Hans Vogt, Joseph Massolle and Josef Engl.

That pursuant to the statutes and the rules of practice in the Patent Office in such case made and provided, Lee DeForest appealed from the said adverse decision of the Examiner of Interferences to the Board of Appeals, and, the case having been argued and submitted to said Board, a decision was rendered by said Board on the 7th day of January, 1930, affirming the decision of the Examiner of Interferences.

That on the 24th day of February, 1930, your petitioner, pursuant to sections 4912 and 4913, Revised Statutes of the United States, gave notice to the Commissioner of Patents of his appeal to this honorable court from the decision of the Board of Appeals awarding priority of invention to said Hans Vogt, Joseph Massolle and Josef Engl, as aforesaid, and filed with him, in writing specific reasons of appeal.

That the Commissioner of Patents has furnished your petitioner a certified transcript of the record and proceedings relating to said interference case, including the notice

and reasons of appeal, which transcript is filed herewith and is to be deemed and taken as a part hereof.

[fol. 3] Wherefore your petitioner prays that his said appeal may be heard upon and for the reasons assigned therefor to the Commissioner, as aforesaid, and that said appeal may be determined and the decision of the Board of Appeals be revised and reversed, that justice may be done in the premises.

Lee DeForest, by Samuel E. Darby, Jr., His Attorney.

Washington, D. C., April 9, 1930.

Indorsed: United States Court of Customs and Patent Appeals. Filed Apr. 9, 1930. Arthur B. Shelton, Clerk.

Department of Commerce, United States Patent Office

To all persons to whom these presents shall come, Greeting:

This is to certify that the annexed is a true copy from the records of this office of Certain Papers, including printed testimony as used before the Office, in the matter of Interference Number 53,193, DeForest vs. Vogt, Massolle and Engl, Subject Matter: Recording Sounds; said Papers being the Record for the United States Court of Customs and Patent Appeals.

In testimony whereof I have hereunto set my hand and caused the seal of the Patent Office to be affixed, at the City of Washington, this second day of April, in the year of our Lord, one thousand nine hundred and thirty, and of the Independence of the United States of America the one hundred and fifty-fourth.

Thomas E. Robertson, Commissioner of Patents.
Attest: D. E. Wilson, Chief of Division. (Seal Patent Office, United States of America.)

[fol. 4] Application of Hans Vogt, Joseph Massolle and Josef Engl, Filed March 29, 1922. Serial No. 547860. Process for Producing Combined Sound Picture Films.

To all whom it may concern:

Be it known that we, Hans Vogt, Joseph Massolle and Josef Engl, citizens of the German Republic, and residents respectively, the first of Berlin-Wilmersdorf, the second and the third of Berlin-Grunewald, Germany, have invented a new and improved Process for Producing Combined Sound Picture Films of which the following is a full, clear and exact description:

In the production of speaking films — is of great advantage especially from the point of view of use, to arrange the sound sequence and the picture sequence upon one and the same material separate (film).

In this procedure, however, there frequently occur in consequence of the changing lighting conditions in the cinematographing process, changes in the degree of light and the bromide of silver layer, and this causes the picture sequence to be either overlighted or underlighted.

As the same film, however, bears close to the picture sequence the continuously normally lighted sound sequence, these differences cannot be removed in the case of combined negatives by developing, weakening, strengthening and so forth. They can only be removed by subjecting the underlighted or the overlighted negative places to separate corresponding treatment.

Technically, this treatment is practically impossible so long as the two sequences are photographed upon the same film.

According to the present invention the difficulty is overcome by either employing entirely separate films for the production of the negatives or films which are connected during the photographing, but which are separated from one another before the developing.

The synchronism is assured in both cases by the perforations and by corresponding marks. The production of the positive films can take place by copying the two negative films preferebly consecutively upon the same positive films. [fol. 5] One can however, also unite previously the two negative films longitudinally together, and then copy this so united negative in the usual manner.

We claim:

1. Process for the production of combined sound and picture films, in which the sound sequence and picture sequence positives are copied upon single film, characterized

by the feature that the respective negatives have been developed separately.

2. Process for the production of combined sound and picture films according to claim 1, characterized by the feature that the photographing of the sound sequence and of the picture sequence takes place on separate films.

3. Process for the production of combined sound and picture films as set forth in claim 1, characterized by the feature that the photographing of the sound sequence and of the picture sequence takes place upon a single film and subsequently divided.

4. Process for the production of combined sound and picture films as set forth in claim- 1 to 3, characterised by the feature that the negatives after development are re-united.

Hans Vogt, Joseph Massolle, Josef Engl. Witnesses: Bruno Learwenka, John W. Bulkley.

(Here follows drawing, side folio 5a)

5752

81

No. 2749 Patent Appeal Docket.

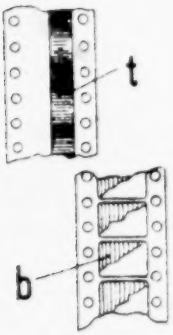

Fig. 1

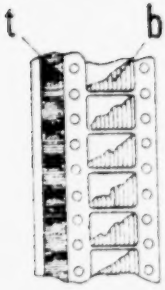

Fig. 2

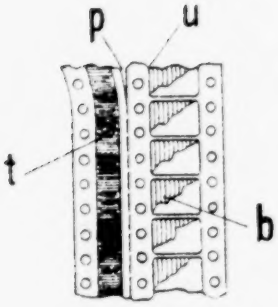

Fig. 3

INVENTOR
Hans Vogt
Joseph Massolle
Josef Engl
BY Munn & Co.
ATTORNEYS

AMENDMENT, APRIL 1, 1925

Hon. Commissioner of Patents.

SIR:

In response to Patent Office action of January 26, 1925, please amend the above entitled application as follows:

* * * * * * *

D'. 3. The method of producing talking moving pictures on the same film which comprises photographing simultane- [fol. 6] ously upon separate films the picture and the sound, and photographing the sound record on an unexposed portion of the picture film.

4. The method of producing talking moving pictures on the same film which comprises photographing simultaneously upon separate films the picture and the sound, and photographing the sound record on an unexposed portion of the picture film between the marginal edge and the sprocket perforations thereof.

* * * * * * *

Respectfully submitted, Hans Vogt, Joseph Massolle and Josef Engl, by Ward, Crosby and Smith, their Attorneys.

April 8, 1924. 1,489,314

L. DE FOREST

RECORDING SOUND

Filed July 16, 1921

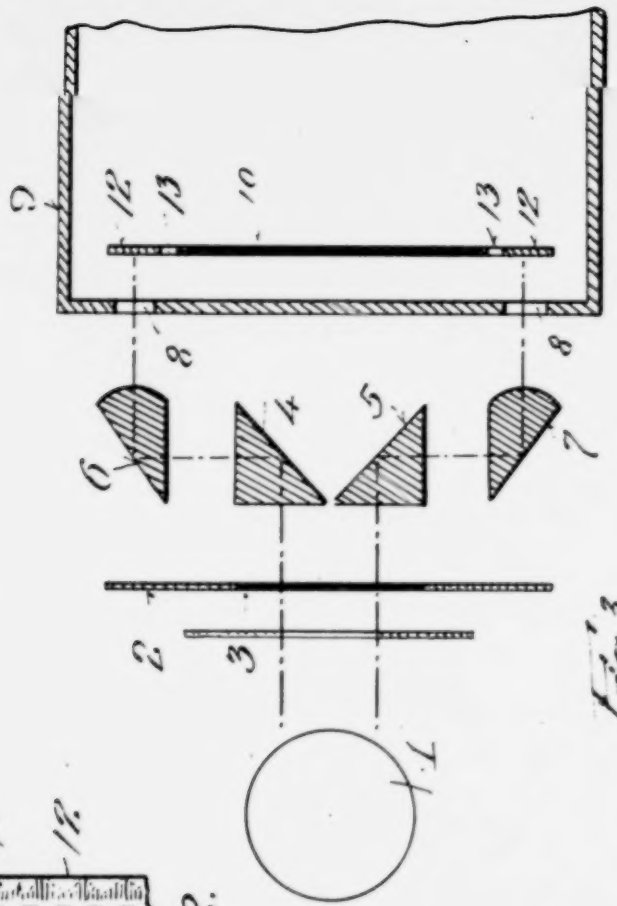

Fig. 3.

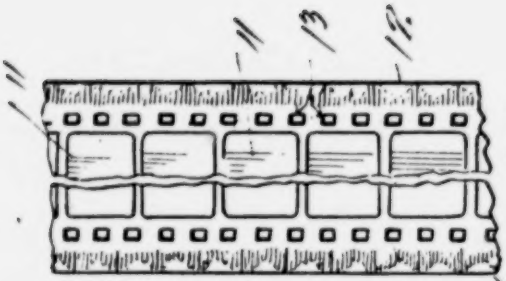

Fig. 2.

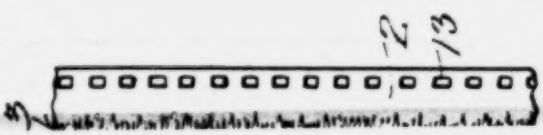

Fig. 1.

Patented Apr. 8, 1924.

UNITED STATES PATE

LEE DE FOREST, OF NEW YORK, N. Y., ASSIGNOR, BY
FOREST PHONOFILM CORPORATION, OF JERSEY CI
TION OF DELAWARE.

RECORDING SOUND.

Application filed July 16, 1921. Serial

To all whom it may concern:

Be it known that I, LEE DE FOREST, a citizen of the United States, residing in the city of New York, county and State of New York, have made a certain new and useful Invention in the Art of Recording Sound, of which the following is a specification.

This invention relates generically to the art of recording sound and more specifically where such record is obtained photographically for use in connection with photographic sound records such as films or the like, and is especially adaptable for use in connection with the art of motion picture photography.

The object of the invention is to provide means which are simple, economical and efficient for photographing sound record on films.

A further object of the invention is to provide means which are highly effective for accurately recording sounds on the marginal edges of a standard motion picture film.

Further objects of the invention will appear more fully hereinafter.

The invention consists substantially in the construction, combination, location and relative arrangement of parts and the method employed in connection therewith, all as will be more fully hereinafter set forth, as shown by the accompanying drawing and finally pointed out in the appended claims.

Figure 1 is a fragmentary view of a sound record embodying the principles of my invention.

Fig. 2 is a similar view showing the sound record applied to the marginal edge of the motion picture film in accordance with my invention.

Fig. 3 is a diagrammatic view illustrating

inside the i
the said fil

I find tha
such sound
made large
mum ampli
be, say one
and faithfu
tails of the
by sound w
as a sound
is satisfacto
would be t
nection wit
used indepe
necessitati
chronism
sidered, an
objectionab
cordance w
produce th
sound reco
shown in F
graphically
print the
edges of t
in Fig. 2.

In the
sound reco
that the re
of the axis
parent tha
record ca
the record
axis there
is accompl
vention, i
wherein th
thereon th
a light sou
arranged

1,489,314

DE FOREST

CORDING SOUND

July 16. 1921

Fig. 3.

Fig. 2.

Fig. 1.

Patented Apr. 8, 1924. 1,489,314

UNITED STATES PATENT OFFICE.

LEE DE FOREST, OF NEW YORK, N. Y., ASSIGNOR, BY MESNE ASSIGNMENTS, TO DE FOREST PHONOFILM CORPORATION, OF JERSEY CITY, NEW JERSEY, A CORPORATION OF DELAWARE.

RECORDING SOUND.

Application filed July 16, 1921. Serial No. 485,332.

To all whom it may concern:

Be it known that I, LEE DE FOREST, a citizen of the United States, residing in the city of New York, county and State of New York, have made a certain new and useful Invention in the Art of Recording Sound, of which the following is a specification.

This invention relates generically to the art of recording sound and more specifically where such record is obtained photographically for use in connection with photographic sound records such as films or the like, and is especially adaptable for use in connection with the art of motion picture photography.

The object of the invention is to provide means which are simple, economical and efficient for photographing sound record on films.

A further object of the invention is to provide means which are highly effective for accurately recording sounds on the marginal edges of a standard motion picture film.

Further objects of the invention will appear more fully hereinafter.

The invention consists substantially in the construction, combination, location and relative arrangement of parts and the method employed in connection therewith, all as will be more fully hereinafter set forth, as shown by the accompanying drawing and finally pointed out in the appended claims.

Figure 1 is a fragmentary view of a sound record embodying the principles of my invention.

Fig. 2 is a similar view showing the sound record applied to the marginal edge of the motion picture film in accordance with my invention.

Fig. 3 is a diagrammatic view illustrating the principle involved in recording the sound inside the intermittent feed perforations of the said film.

I find that if the original photographs of such sound-controlled light fluctuations be made large so that the width of the maximum amplitude of such photographic track be, say one-half inch or more, a more exact and faithful photograph containing any details of the finest light variations produced by sound waves will be obtained. For use as a sound record per se this type of record is satisfactory, but as is readily apparent it would be too large a record to use in connection with a motion picture film unless used independently therefrom and therefore necessitating the various problems of synchronism which have always been considered, and still are considered to be the objectionable problems in this art. In accordance with my invention, however, I produce the large, accurate and definite sound record on a film, for example, as shown in Fig. 1, and therewith reduce photographically the record thus obtained and print the same on one or both marginal edges of the motion picture film as shown in Fig. 2.

In the production of the photographic sound record of Fig. 1 it will be observed that the record is symmetrical on both sides of the axis thereof and it will readily be apparent that a highly effective and efficient record can be obtained by photographing the record contained on opposite sides of the axis thereof, on the marginal edge. This is accomplished, in accordance with my invention, in the manner illustrated in Fig. 3 wherein the sound record film 2 containing thereon the sound record 3 is passed between a light source 1 and 2 and prisms 4 and 5 so arranged that the sound record on one side

Fig. 3.

Fig. 2.

Fig. 1.

INVENTOR
Lee de Forest
BY his ATTORNEYS Darby & Darby

TION OF DELAWARE.

RECORDING SOUND.

Application filed July 16, 1921. Serial No.

To all whom it may concern:

Be it known that I, LEE DE FOREST, a citizen of the United States, residing in the city of New York, county and State of New York, have made a certain new and useful Invention in the Art of Recording Sound, of which the following is a specification.

This invention relates generically to the art of recording sound and more specifically where such record is obtained photographically for use in connection with photographic sound records such as films or the like, and is especially adaptable for use in connection with the art of motion picture photography.

The object of the invention is to provide means which are simple, economical and efficient for photographing sound record on films.

A further object of the invention is to provide means which are highly effective for accurately recording sounds on the marginal edges of a standard motion picture film.

Further objects of the invention will appear more fully hereinafter.

The invention consists substantially in the construction, combination, location and relative arrangement of parts and the method employed in connection therewith, all as will be more fully hereinafter set forth, as shown by the accompanying drawing and finally pointed out in the appended claims.

Figure 1 is a fragmentary view of a sound record embodying the principles of my invention.

Fig. 2 is a similar view showing the sound record applied to the marginal edge of the motion picture film in accordance with my invention.

Fig. 3 is a diagrammatic view illustrating the principle involved in recording the sound waves photographically, in accordance my invention, on the marginal edge of a standard motion picture film.

The same part is designated by the same reference character wherever it occurs through the several views.

In my co-pending application, Serial No. 391,705, filed June 25, 1920, I show and describe methods for photographing sound-produced fluctuations of a source of light upon one or both margins of a standard motion picture film either outside or directly inside the int
the said film.

I find that
such sound-c
made large s
mum amplitu
be, say one-h
and faithful
tails of the f
by sound wa
as a sound re
is satisfactor
would be too
nection with
used indepen
necessitating
chronism w
sidered, and
objectionable
cordance wi
produce the
sound record
shown in Fig.
graphically
print the sa
edges of the
in Fig. 2.

In the pr
sound record
that the reco
of the axis th
parent that
record can
the record c
axis thereo
is accompli
vention, in
wherein the
thereon the
a light sour
arranged th
of the axis
direction an
the film is
by means o
course, be
rays affect
reflected b
The reflec
by prisms
allel lines
in which
exposed
of and u

Fig. 3.

Fig. 2.

Fig. 1.

INVENTOR
Lee de Forest

ATTORNEYS Darby & Darby

RECORDING SOUND.

Application filed July 16, 1921. Serial No. 485,332.

To all whom it may concern:

Be it known that I, LEE DE FOREST, a citizen of the United States, residing in the city of New York, county and State of New York, have made a certain new and useful Invention in the Art of Recording Sound, of which the following is a specification.

This invention relates generically to the art of recording sound and more specifically where such record is obtained photographically for use in connection with photographic sound records such as films or the like, and is especially adaptable for use in connection with the art of motion picture photography.

The object of the invention is to provide means which are simple, economical and efficient for photographing sound record on films.

A further object of the invention is to provide means which are highly effective for accurately recording sounds on the marginal edges of a standard motion picture film.

Further objects of the invention will appear more fully hereinafter.

The invention consists substantially in the construction, combination, location and relative arrangement of parts and the method employed in connection therewith, all as will be more fully hereinafter set forth, as shown by the accompanying drawing and finally pointed out in the appended claims.

Figure 1 is a fragmentary view of a sound record embodying the principles of my invention.

Fig. 2 is a similar view showing the sound record applied to the marginal edge of the motion picture film in accordance with my invention.

Fig. 3 is a diagrammatic view illustrating the principle involved in recording the sound waves photographically, in accordance my invention, on the marginal edge of a standard motion picture film.

The same part is designated by the same reference character wherever it occurs through the several views.

In my co-pending application, Serial No. 391,705, filed June 25, 1920, I show and describe methods for photographing sound-produced fluctuations of a source of light upon one or both margins of a standard motion picture film either outside or directly inside the intermittent feed perforations of the said film.

I find that if the original photographs of such sound-controlled light fluctuations be made large so that the width of the maximum amplitude of such photographic track be, say one-half inch or more, a more exact and faithful photograph containing any details of the finest light variations produced by sound waves will be obtained. For use as a sound record per se this type of record is satisfactory, but as is readily apparent it would be too large a record to use in connection with a motion picture film unless used independently therefrom and therefore necessitating the various problems of synchronism which have always been considered, and still are considered to be the objectionable problems in this art. In accordance with my invention, however, I produce the large, accurate and definite sound record on a film, for example, as shown in Fig. 1, and therewith reduce photographically the record thus obtained and print the same on one or both marginal edges of the motion picture film as shown in Fig. 2.

In the production of the photographic sound record of Fig. 1 it will be observed that the record is symmetrical on both sides of the axis thereof and it will readily be apparent that a highly effective and efficient record can be obtained by photographing the record contained on opposite sides of the axis thereof, on the marginal edge. This is accomplished, in accordance with my invention, in the manner illustrated in Fig. 3 wherein the sound record film 2 containing thereon the sound record 3 is passed between a light source 1 and 2 and prisms 4 and 5 so arranged that the sound record on one side of the axis of the film 2 is reflected in one direction and the record on the other side of the film is reflected in the opposite direction by means of the prisms 4 and 5. It will, of course, be understood that it is the light rays affected by the sound record 3 that are reflected by the respective prisms 4 and 5. The reflected light rays are again reflected by prisms 6 and 7 to direct the same in parallel lines through orifices 8 in the casing 9, in which the motion picture film 10, either exposed as to the picture spacing 11 thereof and unexposed as to the marginal edge

thereof or unexposed as to its entire surface, is located. Means are provided to reduce, in size, the sound record 3 contained on its film 2, to the necessary size to be accurately and completely recorded on the marginal edges 12 of the film 10. This means may comprise suitable lenses or preferably a combination of a convex lens with the prisms 6 and 7, as shown. By means of this arrangement it will readily be apparent to those skilled in the art that the large, clear, distinct sound record 3 contained on its film 2 may be accurately reproduced in smaller, but nevertheless complete detail on one or both marginal edges 12 of the motion picture film, to thereby enable utilization of the space of the film contained between the intermediate feed perforations 13, and the edge or edges thereof.

It will also be readily apparent to those skilled in the art that by suitable location of the prisms 4, 5, 6, 7, and the orifices 8 of the casing 9, the reproduction of the sound record may be effected on any other desired part of the film. By suitable variation in the form of the prisms 6 and 7, or the utilization of suitable lenses, the original sound record may be reduced in size, reproduced as of the same size or enlarged, as desired.

Many other modifications and changes in details will occur to those skilled in the art without departing from the spirit and scope of my invention as defined in the claims, but having now set forth the objects and nature of my invention, and having shown and described structures embodying the principles thereof and illustrating the method employed in accordance therewith, what I claim as new and useful, and of my own invention, and desire to secure by Letters Patent, is:—

1. The method of producing talking moving pictures on the same film which comprises photographing simultaneously upon separate films the picture and the sound, and photographing the sound record on an unexposed portion of the picture film.

2. The method of producing talking moving pictures on the same film which comprises photographing simultaneously upon separate films the picture and the sound, reducing the size of the record, and photographing the reduced sound record upon an unexposed portion of the picture film.

3. The method of producing talking moving pictures on the same film which comprises photographing simultaneously upon separate films the picture and the sound, and photographing the sound record on an unexposed portion of the picture film between the marginal edge and the sprocket perforations thereof.

4. The method of producing talking moving pictures on the same film which comprises photographing simultaneously upon separate films the picture and the sound, reducing the size of the record, and photographing the reduced sound record upon an unexposed portion of the picture film between the marginal edge and the feed sprocket perforations thereof.

In testimony whereof I have hereunto set my hand on this 14th day of July, A. D. 1921.

LEE DE FOREST.

[fols. 10 & 11] [Stamp:] U. S. Patent Office, Docket Division, Feb. 6, 1928

IN THE UNITED STATES PATENT OFFICE

Interference No. 53,103

HANS VOGT, JOSEPH MASSOLLE and JOSEF ENGEL

vs.

LEE DEFOREST

Ward, Crosby & Smith, Attorneys for Vogt, Massolle and Engl. S. Mortimer Ward, Jr., of Counsel.

RECORD OF HANS VOGT, JOSEPH MASSOLLE AND JOSEF ENGEL

[fol. 12] INDEX

	Page
The Issue	13
Preliminary Statement of Hans Vogt, Joseph Massolle and Josef Engl	14

[fol. 13] IN THE UNITED STATES PATENT OFFICE

Interference No. 53,103

HANS VOGT, JOSEPH MASSOLLE and JOSEF ENGEL

vs.

LEE DEFOREST

The Issue

1. The method of producing talking moving pictures on the same film which comprises photographing simultaneously upon separate films the picture and the sound, and photographing the sound record on an unexposed portion of the picture film.

2. The method of producing talking moving pictures on the same film which comprises photographing simultaneously upon separate films the picture and the sound, and photographing the sound record on an unexposed portion of the picture film between the marginal edge and the sprocket perforations thereof.

[fol. 14] IN THE UNITED STATES PATENT OFFICE

Interference No. 53,103

HANS VOGT, JOSEPH MASSOLLE and JOSEF ENGEL

vs.

LEE DEFOREST

PRELIMINARY STATEMENT OF HANS VOGT, JOSEPH MASSOLLE AND JOSEF ENGL

Hans Vogt, a resident of Berlin-Wilmersdorf, Germany, and Joseph Massolle and Josef Engl, residents of Berlin-Grunewald, being duly sworn, depose and say that they jointly, are party to the interference declared by the Commissioner of Patents, November 10, 1925, between their application for patent, filed March 29, 1922, Serial No. 547,860, entitled "Process for Producing Combined Sound and Picture Films," and the patent of Lee DeForest, granted April 8, 1924, No. 1,489,314, for an improvement in "Recording Sound"; that they jointly made the invention contained in claims 3 and 4 of their application declared to be involved in this interference as counts 1 and 2 respectively, thereof, being at that time in Germany; that patents for [fol. 15] such invention were applied for and obtained by them as follows:

Application filed in France, April 5, 1922, patent dated April 5, 1922, No. 549,728, granted the 28th day of November 1922, and published the 17th day of February, 1923.

Application filed in Germany, April 14, 1921, published the 7th day of September, 1922, patent dated April 15, 1921, No. 368,383 and granted the 21st day of November, 1922.

Application filed in Great Britain, April 11, 1922, patent dated 14th April, 1921, No. 178,442, specification open to inspection in its then condition although not accepted 14th April, 1922, printed official abridgment of specification in the condition in which it was when open to inspection 14th June, 1922, specification accepted and open to inspection in its accepted condition 16th November, 1922, specification printed and copies on sale 6th December, 1922, patent actually sealed 1st February, 1923.

Application filed in Italy, March 24, 1922, No. 208,496—No. 9/602 granted the 17th day of May, 1924, and published the 17th day of May, 1924; patent dated March 24th, 1922.

The invention was never fully described in a printed publication other than the patents above referred to.

The invention was introduced into the United States by the application papers, viz., the present application, Serial No. 547,860, which papers were received in the United [fol. 16] States on or about the 24th day of March, 1922.

Hans Vogt, Joseph Massolle, Josef Engl.

Subscribed and sworn to before me this 6th day of January, 1926, by Messrs. Hans Vogt, Joseph Massolle and Josef Engl. E. T. Smith, Consul of the United States of America at Berlin. (Seal American Consulate.) $2.00 Fee Stamp. Service No. 112. $2.=m. 8.60.

[fol. 17] [Stamp:] U. S. Patent Office, Docket Division, Mar. 6, 1928

IN THE UNITED STATES PATENT OFFICE

Interference No. 53,103

LEE DEFOREST

v.

MASSOLE, ENGL & VOGT

Darby & Darby, Attorneys for DeForest. Samuel E. Darby, Jr., L. D. Fletcher, of Counsel.

RECORD ON BEHALF OF DEFOREST

[fol. 18] INDEX

	Page
Preliminary Statement	16
Testimony	17
Stipulations	43

Testimony

	Page
Dr. Lee DeForest:	
Direct	17
Cross	25

Stephen J. Torma:
Direct 34
Cross 37
Redirect 39
Recross 42
William E. Garity:
Direct 43
Cross 48
Redirect 54
Recross 56
Adolph G. Senner:
Direct 59
Cross 62
Redirect 67

Exhibits

1.—DeForest Notebook No. II 22
2.—DeForest Notebook 24
3.—Memorandum 39
4. Application Data 54

[fol. 19] In the United States Patent Office

Interference No. 53,103

DeForest

v.

Vogt, Massole & Engl

In re Patent to Lee DeForest No. 1,489,314, Granted April 8, 1924, on Application, Serial No. 485,332, Filed July 16, 1921, for Recording Sound

Preliminary Statement

County of New York,
State of New York, ss:

Lee DeForest, being first duly sworn, deposes and says as follows: I am the patentee of the above entitled patent and declared to be involved in the above entitled interference; that I conceived the invention set forth in the counts of said interference on or about January 1, 1921; and I first disclosed the invention to others on or about the first

day of January, 1921; that I made the first written description and drawing of the invention on or about January 1, 1921; that the invention was first reduced to practice on or about January 15, 1921; that the invention has been used commercially but not to any great extent.

Lee DeForest.

Sworn to and subscribed before me this 14th day of December, 1925. Rose A. Batterman, Notary Public. (Notarial Seal.) New York Co. Clerk's No. 802, Reg. No. 6199A. Commission expires March 30, 1926.

[fol. 20] IN THE UNITED STATES PATENT OFFICE

Interference No. 53,103

LEE DEFOREST

against

MASSOLLE, ENGL & VOGT

TESTIMONY ON BEHALF OF PARTY DEFOREST

Depositions taken on behalf of the Party DeForest, pursuant to agreement of counsel, at the offices of Darby & Darby, 220 Broadway, New York, New York, before Augusta P. Boos, Notary Public, Thursday, January 5, 1928, commencing at 10:30 o'clock in the forenoon.

Present:

S. E. Darby, Jr., Esq., and L. D. Fletcher, Esq., on behalf of Party DeForest.

S. Mortimer Ward, Jr., Esq., on behalf of Party Massolle, Engl & Vogt.

(The presence of Mr. John M. Joy as an observer is noted.)

Deposition of Dr. Lee DeForest

DR. LEE DEFOREST, called as a witness in his own behalf, having been first duly sworn, testifies as follows, in response to questions by Mr. Darby:

Direct examination.

By Mr. Darby:

Q. 1. Please state your name, age, residence and occupation.

A. Lee DeForest, 54 years, residence, Spuyten Duyvil, [fol. 21] New York City, occupation, inventor and research engineer.

Q. 2. You are the applicant of the DeForest application involved in this interference?

A. I am.

Q. 3. I call your attention to the counts of the interference so as to familiarize yourself with the subject-matter involved, and ask you to please read them.

A. Yes, I have read them.

Q. 4. Do you claim to be the inventor of the subject-matter of those counts?

A. I do.

Q. 5. Will you please recite the story of your making the invention of these counts, giving dates, and referring to any documentary records that you have thereof.

A. I began my work in recording sound photographically in 1919. Having determined that it was possible to solve the problem of talking motion pictures along that principle, I devoted myself to the general problem in all its phases.

Having conceived three methods of recording sound photographically on motion picture film, I applied myself to working out these three methods to determine which was the most practical. This work extended from 1919 until July, 1921, at which time I left New York to visit Germany. Previous to this date, my experiments had been carried on at the High Bridge plant of the DeForest Radio Company, Sedgwick Avenue, New York City. My three earliest notebooks, which I have before me, date from November, 1919, to January 26, 1922.

Q. 6. Was it your practice to keep notebook records of your work?

[fol. 22] A. It was. I was very careful during this period to make note of almost every experiment which I conducted and also the line of research which I proposed to work, jotting down, usually in pencil, the conditions of a certain experiment before same had been carried out, and writing out the results thereof in ink, so that it would be very easy

to distinguish by glancing over my notes between what I proposed to do and the results obtained from the work.

Q. 7. Which was it you jotted down in ink, the results or the proposed work?

A. Results. The conditions under which the tests were made are in pencil.

Q. 8. Was that your practice throughout all of the notebooks, or was it your intention to distinguish between what you proposed to do and the results that you obtained?

A. It was my practice during this work on phonofilm—talking motion pictures—to use the two methods of describing, although I had not adopted this method generally in my previous work in radio.

Q. 9. My question is: Did you have any fixed rule as to which would be put in ink and which would be put in pencil; or was it merely your intention to distinguish between them by having either the one or the other in pencil?

A. It was the latter, to distinguish between them, that is, between the conditions of the experiment and the results obtained, so I could tell at a glance, in looking over my notes, the difference—could distinguish between the two subjects. In some of the notes you will find the conditions preceding the experiments to be written in ink and the results in pencil; some of the notes are reversed.

[fol. 23] Q. 10. Confining yourself now to the subject-matter of the present controversy, will you please refer to the first record that you have bearing on this subject, and state the circumstances under which the record was made.

A. The first note that I find in my notebook. No. II, bearing on this point, is under the date of December 26, 1922——

By Mr. Darby: What date?

(Answer continued:) December 26, 1920. Under this date, under paragraph lettered "8," I find the following comment on the result obtained from the Record #8—Photographic Sound Record #8—made on that date:

"Too faint. Had to develop this film for 6 minutes to get at all heavy track, this completely fogged it. So a *picture* would have been ruined."

By Mr. Ward: Counsel asks whether the witness is going to contend that he had a conception of the invention at

issue at the said date of December 26, 1920. If so, counsel wishes to object to the last answer and all other answers bearing any date prior to January 1st, 1921, according to the preliminary statement.

By Mr. Darby: We will contend that Dr. DeForest had a conception of the invention at least as early as the date of this entry; but we recognize that, under the rules controlling the matter, by virtue of Dr. DeForest's preliminary statement, there may be circumstances whereby proof of [fol. 24] conception of the date of this notebook record may of necessity be limited to the date alleged in the preliminary statement.

By Mr. Ward: The last question is, therefore, objected to, and it is moved that it be struck from the record.

Q. 11. Will you please explain in non-technical language the meaning of this entry and the significance of it, going into the matter of what the entries in the notebook refresh your recollection as to what you were actually doing at the time this entry that you have quoted from was made.

A. At that period—December, 1920—I was working on various types of sound-controlled sources of light, for the purpose of photographically recording fluctuations of said light produced by sound waves, directly or indirectly. I had experienced great difficulty in getting sufficiently actinic light which would respond to telephonic frequencies, and had been, therefore, experimenting with various types of motion picture film, for example, X-ray film, superspeed film, panchromatic film, etc. The note under heading, December 26, states that I was using at this time X-ray film.

On account of the aforementioned lack of photographic quality of the light source I was employing, said light falling through a very narrow slit upon a film traveling at about 60 feet per minute, I found it necessary to overdevelop the film in order to obtain a satisfactory sound record on same. Inasmuch as I had in my mind from the very beginning of my work the combining of sound record and motion picture photograph on the same film, it occurred to me about this time—when I found that overdevelopment of [fol. 25] the film for a sound record was necessary—that said overdevelopment would fog the picture, were a picture taken at the same time upon the same film—same negative film.

Looking further through this notebook, I find, under date of December 28, 1920, under paragraph 8 thereof, the following comment:

"Developed this last *10* minutes until well fogged. This would be too long for cine *picture*. Hence will probably need to make 2 negatives (picture and sound) and print on *same* pos."

Looking further through this same notebook, I find, under date of January 18, 1921, under paragraph 8 thereof:

"Developed 11 minutes (very cold day) (longer development is best for *sound* film but *not* for picture. Hence will probably use 2 films)."

A perusal of this and the following notebook shows in countless instances that I was having trouble in obtaining satisfactory photographic records of sound without overheavy—over-long—development of the negative and consequent fogging of same.

Under date of April 6, 1921, is the following comment on result obtained from a sound record film which I had sent up to Dr. Mees, of Eastman's, Rochester, for special development by him. The note reads:

"April 6. Second half of film developed by Dr. Mees at Eastman's. In *appearance* it is clearer (and cleaner!) than [fol. 26] my half. These records reproduce quite noticeably better than those I developed. #3 is the best of lot. Mees developed *this* record until it was quite fogged—too much for a picture film."

Q. 12. Now, will you please state briefly and concisely the signficance of the substance of those entries.

By Mr. Ward: Objected to as calling for secondary evidence. The entries speak for themselves.

A. As stated above, I had from the very start embarked on this work with the idea of photographing sound and motion picture on the same film. When I first conceived a method of solving this problem, I did not foresee I would have the difficulty which I soon encountered of obtaining sufficiently actinic light source for sound recording, a light source which in intensity could be compared—would be

comparable—to the light used upon the subject of the motion picture itself. However, soon after my work revealed this fault of the recording light to me, and my continued developments of photographic sound records showed that it was frequently necessary to overdevelop the negative in order to obtain a sufficiently dense sound record thereon, the problem suggested itself to me as how this overdevelopment would affect the picture when the picture was also recorded on the same film. The solution of this difficulty which I conceived was to use in this case two films, one for a picture and the other for a sound, and to develop each negative as it should be developed in order to properly ob- [fol. 27] tain an exposure thereon—in order properly to bring out the exposure thereon; and to subsequently print from both negatives, one carrying the sound and the other the picture, upon the same positive; so that in reproducing the talking motion picture I would have to deal with only one positive film.

The notes from which I have quoted give the dates when this conception and solution of the problem came to me. I discussed this matter on repeated occasions with my assistant, Mr. William Garity, and also with Mr. Senner, who was in charge of the motion picture department of the optical supply house, Herbert & Huesgen, East 42nd Street, New York City. From Mr. Senner I was purchasing at that time all my film used in my experiments, my developer equipment, developing and fixing solutions, and my motion picture camera. I discussed these problems and the development of my films with Mr. Senner. My notebooks show that I took my first films on which sound had been recorded photographically to Paul Thompson for development, but that shortly after I began to take them to Herbert & Huesgen, where I discussed the various photographic matters involved in my work with Mr. Senner.

By Mr. Ward: That part of the answer which refers to what the witness' notebook shows is objected to as secondary evidence, unless the entries in the notebook are produced, showing the same.

By Mr. Darby: I offer in evidence the DeForest Notebook No. II, the entries appearing to be dated from October, 1920, to April 6, 1921; and ask that the same be marked, "DeForest Exhibit No. 1." For convenience of counsel, I have had

[fol. 28] turned down the marginal edge of the pages on which the entries read by Dr. DeForest are contained, and will mark these entries, in the order in which they were read into the record, on the turned-down edge of the page:

"1" for entry of December 26, 1920;
"2" for entry of December 28, 1920;
"3" for entry of January 18, 1921;
"4" for entry of April 6, 1921.

Q. 13. In Notebook III, under date of July 27, appears an entry entitled, "Garry's Picture," and the next succeeding entry is dated December 8, 1921, "Berlin." Am I correct in understanding from your previous answer that you left for Berlin in July, 1921?

A. Yes; it was the last day of July, as I recall it, or possibly the 30th, I sailed for Berlin. I returned in September to New York, merely to pack up my apparatus and move my laboratory to Berlin, where I recommenced my work as soon as my apparatus had arrived and was set up in my new laboratory.

Q. 14. From December, 1920, until the last day of July, 1921, when you left for Berlin, what proportion of your time were you devoting to this line of investigation in the talking motion picture art?

By Mr. Ward: Question objected to as indefinite.

A. At least three-quarters of my time was devoted to the phonofilm problem, and the balance was devoted to radio telephone matters.

[fol. 29] Q. 15. Are all of the entries in these two notebooks between the dates I last gave you in your own handwriting, so far as you know?

A. Yes; I do not think there is any entry by anyone else in the book.

By Mr. Ward: In view of the last answer, the notebook is objected to as the witness' notebook, unless he can identify as being his own handwriting each and every entry therein relied upon.

Q. 16. Are each of the entries that you have read into this record in your own handwriting?

A. Yes.

Q. 17. You made those entries yourself.

A. I did.

Q. 18. And when did you make each of the respective entries with respect to the date appearing on the pages that you have referred to?

A. Either on that date or on the day following. It sometimes happened that my work for the day ended with the development and fixing of the film and placing same on the drying rack, and I was in no position to test said film until the following day. The tests of the film, however, were made at the first possible opportunity, and my comments based on said tests were immediately entered into the book,—each comment in the space which I had left in the notebook under the line describing the conditions under which that particular test had been made.

Q. 19. Do all of the entries of the notebook record work actually done by you where result entries are made?

A. Yes, they do.

Q. 20. Do the entries during that period fairly indicate, [fol. 30] in your opinion, the amount of time that you were devoting to phonofilm problems?

By Mr. Ward: Objected to as vague and indefinite, and as leading.

A. Yes, the dates show that I was working practically every day,—Sundays and holidays included,—on these phonofilm problems; but they do not show how much of each day was devoted to this task.

By Mr. Darby: I offer in evidence the notebook beginning with an entry of April 23, 1921; and ask that the same be marked, "DeForest Exhibit No. 2."

Q. 21. You have referred in your testimony to an assistant, William Garity. Was he your assistant throughout the period between December, 1920, and July, 1921?

A. Yes; whenever I required the services of an assistant, I called Garity in. However, Garity spent by far the largest part of his time in the Radio Laboratory, and not in helping me on my phonofilm experiments. I discussed the problems with Gariety from time to time.

Q. 22. I notice in that period a name in one of the notebooks,—"Logwood." What is the full name of Logwood, and state who he is and where he is.

A. Charles V. Logwood was my chief radio assistant during all the years that I was working at the High Bridge

Laboratory,—that is, from 1913 to 1921. I called Logwood in from time to time to show him results I was obtaining in phonofilm work, and discussed the problems as they arose with him. Unfortunately, Mr. Logwood died last summer.

Q. 23. Did you do any phonofilm experimental work when [fol. 31] you returned to the United States in September, 1921, to pack up your things to go back to Germany, according to one of your answers?

By Mr. Ward: Objected to as vague and indefinite.

A. My recollection is that I did no work on phonofilm whatever during the brief period I was in New York preparing to return to Berlin.

Q. 24. About how long were you in New York?

A. About three weeks.

Q. 25. I call your attention to the fact that your application involved in this interference was filed July 16, 1921. Had you attempted to actually use the invention of this interference prior to the filing date of your application?

By Mr. Ward: Objected to as leading.

A. No, I did not, for the reason that I had only my motion picture camera—my one motion picture camera—and no available method of using another camera synchronized to the first one, through one of which cameras the sound record film could be passed, while the other camera was recording the picture on its film.

Q. 26. What do you mean by the expression, you had "no available method"?

A. I would have had to have two cameras,—one for sound and one for picture—and the two synchronized by some mechanical or electrical means in order to record simultaneously sound and picture on two separate negatives.

Q. 27. That is, you did not have the apparatus necessary to do that?

A. I did not.

Direct examination closed.

[fol. 32] Cross-examination.

By Mr. Ward:

X Q. 28. How long have you had a clear understanding of what the claims of your patent here in interference cover?

A. Since they were first presented to me by my attorney. I don't remember the exact date.

X Q. 29. Well, would that be shortly after the patent issued, or at the time this interference was declared, or what?

A. At the time the application was prepared and those claims added, although I cannot now state that those particular claims were originally in the specification—the text of the specification. The record would show that.

X Q. 30. Well, at any event, by the date of issue of the patent, you were familiar with what the claims of the patent covered?

A. Yes.

X Q. 31. You state that your notebook shows that you took your first sound record films to Paul Thompson for development. Where is that shown?

A. Let me look at the Notebook No. I. (Witness examines notebook.) The first note I find to this effect is in Notebook No. I, under date of December 16, 1919:

"Note.—This film developed by Paul Thompson—while second film was by Herbert & Huesgen and showed much more detail."

X Q. 32. You have referred to the fact that you invented three methods of recording sound photographically on motion picture film. Please describe very briefly the three methods you have reference to.

[fol. 33] A. The method of the speaking flame; the short incandescent filament lamp; and the gas-filled glow lamp.

X Q. 3. That is, those subjects-matter related to photographing sound on a film by those three types of light source; is that right?

A. That is correct.

X Q. 34. You stated that from 1919 to July, 1921, you applied yourself to the working out of these three methods to determine which was the most practical; that is correct, is it not?

A. It is.

X Q. 35. And in doing that work, it is not necessary, is it, to resort to taking a picture record on one film and a sound record on another and printing these on a third?

A. No; for these preliminary experiments, negative exposure only was sufficient. It was not necessary to make a print of any sort in order to determine the quality of sound record which I had secured.

X Q. 36. Now, you referred to it being your custom to keep notebooks. How long were you keeping notebooks on your phonofilm sound recording work?

A. From practically the very first of my experiments I kept notes. The first date in the notebooks which I have is November 7, 1919, but I kept my notes of work prior to this date in another laboratory notebook in connection with my radio work.

X Q. 37. And was it your custom to put down all your experiments in your notebooks?

A. Not all, but most of them.

X Q. 38. And where have you had, during the last three years, the three notebooks which you have produced at this [fol. 34] testimony, which date from November 7, 1919?

A. They have been in my studio at 318 East 48th Street, until the interference between myself and Tri-Ergon—the first interference between one of my patents and Tri-Ergon's patent application was declared, since which time these notebooks have been in the possession of Mr. Darby.

X Q. 39. That is, since the date of declaration of the Interference 51,947, involving your patent 1,482,119, and on application owned by Tri-Ergon Company of Engl, Massolle & Vogt?

A. That is correct.

X Q. 40. And where have these three notebooks which you produced at this hearing been since July 1st, 1926—at the same place or places?

A. Yes.

X Q. 41. The two notebooks, Exhibits No. 1 and No. 2, have then been either in your possession or in the possession of your attorney, Mr. Darby, since July 1st, 1925?

A. Yes.

X Q. 42. And in Mr. Darby's possession from that date until January, 1926?

A. Yes; and since that latter date.

X Q. 43. And since January 1st, 1926, where has the other notebook been, in which you say you recorded your first experiments?

A. I brought all of the notebooks down to Mr. Darby at the same time—Notebooks Nos. I, II and III.

X Q. 44. I refer particularly to the one about which you said you made the records in your notebook on radio work.

A. That book was one which was left in the radio labo-

[fol. 35] ratory at 1391 Sedgwick Avenue and was destroyed in the fire.

X Q. 45. In the above-mentioned Interference No. 51,947 between yourself and Engl, et al., involving your patent 1,482,119, you testified as a witness did you not?

A. I did.

X Q. 46. On page 96 of your record, in answer to Q. 60, I read you the following:

"Q. 60. Did you keep any notebook records up to September, 1919?

"A. Yes, I kept notes of my work while I was in New York in the regular laboratory notebooks, into which were written the results of work and experiments by Mr. Logwood and myself. These books remained in the general laboratory of the DeForest Company and were, so far as I know, in their possession when the studio—or, the works the laboratory were moved from High Bridge to Jersey City, which was in the early spring of 1922. I left High Bridge to carry on my development of the talking motion picture in Germany in October, 1921, and was abroad at the time the factory was moved to Jersey City. These notebooks—I have never been able to find these early notebooks since the plant was moved over to Jersey City. A great number of records of the office and laboratory were lost or destroyed during that moving."

Now, what is your present recollection as to whether that notebook was destroyed in the fire or not?

[fol. 36] A. Since giving the testimony which you have just read, my memory has been refreshed by the testimony of Coyer and Garity, and my present recollection is that the notebook which I was keeping—in which I was keeping the record of my early work prior to my work in the studio—in the office building located at 1415 Sedgwick Avenue—was destroyed in the fire.

X Q. 47. You say your memory was refreshed by Coyer's deposition?

A. Yes, by the deposition of Henry Coyer.

X Q. 48. When did you read Coyer's deposition?

A. Not until some time after it was completed—typed. I was not present when Coyer was testifying most of the time.

X Q. 49. Were you present when he was testifying?

A. I was present when he began his testimony, but, as I recall it now, only for a half hour or so.

X Q. 50. By your statement in answer to Q. 14 of your present testimony, to the effect that about three-quarters of your time was devoted to the "phonofilm problems," you were referring to the trials of the different light sources under various conditions for getting sound photographed on a film?

A. Yes, in general. That was part of the general phonofilm problem at which I was at work during that period.

X Q. 51. You were not intending to give the impression that three-quarters of your work during this period was endeavoring to take sound record and picture record on separate films and then print them on a third?

A. Oh, no, not at all. I didn't begin to take pictures until I purchased the camera from Herbert & Huesgen in February, 1921.

[fol. 37] X Q. 52. I have read through your notebook No. II, and as far as I can ascertain therefrom that notebook is concerned with experiments endeavoring to photograph sound by a gas flame, except for a few days' work in March, 1921—I believe about March 10th to about March 18th—when you were using in experiments what you referred to as the photion tube; is that substantially correct?

A. The notes in that book between the dates you have cited refer, as you have stated, to an experiment with the photion or gas-filled tube as a source of light. I carried on experiments at earlier dates than above with the photion, which I originally called "luxion."

X Q. 53. But in that notebook, Exhibit No. 1, the experiments outside of those dates that I referred to appear to be carried on merely with photographing sound with a gas flame.

A. Yes; I do not find any reference in this book to other tests with the photion tube.

X Q. 54. And in that book, as far as I could ascertain, there are only two entries—namely, those under date of December 28, 1920, and January 18, 1921—which make any reference or suggestion to the use of two separate films for recording sound and pictures; is that correct?

A. Yes; those are the two references to the use of two films, one for recording sound and one for the picture.

X Q. 55. Now, did you read your patent application before you signed it?

A. Yes.

X Q. 56. Did you consider in reading it that it correctly set forth your invention with respect to the use of two separate films for recording sound and pictures and the print- [fol. 38] ing of the sound record on the same film with the picture record?

A. Yes, I read the specification at the time it was prepared. I do not believe I was particularly—thoroughly satisfied with it—which is frequently my condition when I receive patent specifications from my attorney which I do not draw up myself.

X Q. 57. In what way do you recall you were not satisfied with it?

A. It was too brief, as I recall it. It did not go into the subject as thoroughly as I should have liked to have had it.

X Q. 58. Did you consider that it at least pointed out in general the problem which you were seeking to solve?

A. At this late date I have no recollection of just how I was impressed by reading the specification in 1921.

X Q. 59. Well, would you have accepted as satisfactory an application specification which made no reference whatsoever to the object of your invention or the problem you were seeking to solve by that invention?

A. It was my opinion, as I recall it now, that the claims covered the invention and, if issued, would give me the protection that I was after.

By Mr. Ward: The answer is objected to as unresponsive.

X Q. 60. I asked you whether you would accept as satisfactory a specification of yours which made no reference to the object of the invention or the problem that the invention sought to overcome.

A. In general, no.

X Q. 61. You have testified here that you had found, after [fol. 39] developing your sound records, that you would have to overdevelop the film in order to get a proper sound record and that you realized that this necessary overdevelopment of the sound record would fog a picture record if it was sought to take both on the same film and develop the combined record as found on that film, and that it was for this reason that you conceived of the idea of taking the picture record and the sound record on separate films and then reprinting from these on a third film; is that correct?

A. That is correct.

X Q. 62. Now, I will ask you to take your patent specification and look through it and see if you find a word anywhere in it with reference to that problem?

By Mr. Darby: The question is objected to because it calls for the construction of the patent and patent language by this witness. The patent will speak for itself, and the counts of the present interference of themselves answer the question.

I further object to the question on the ground that it is not proper cross examination, and call attention to the fact that opposing counsel is making the witness his own witness.

By Mr. Ward: Counsel believes he has a right to cross examine the witness in an endeavor to have him clear up, if he can, what counsel believes is an obvious inconsistency between the disclosure of the patent specification and the witness' alleged conception, or rather a total absence in the specification, as counsel sees it, of anything pertaining to [fol. 40] what the witness now alleges he had in his mind in December, 1920, and January, 1921, but which is the subject-matter and is fully disclosed in his opponents' specification.

By Mr. Darby: Opposing counsel's statement consists of nothing more nor less than an argument based on documentary record, which argument can be successfully or unsuccessfully presented on that documentary record before the proper tribunal without requiring this witness, who, so far as this record is concerned, is unqualified to give a legal construction of the patent, for, obviously, the patent will speak for itself. If, however, counsel insists on answer to this question, which likewise obviously is directed to matter not gone into on direct examination, I adhere to the rules of evidence and will urge that the witness has been made his own and he will be bound thereby.

By Mr. Ward: Counsel insists that he has a right through cross examination to point out the improbability of the statements made by the witness, particularly in view of the character of the said two items appearing in the notebook; and if this witness is not the proper one to cross examine on it, counsel does not know who is.

By Mr. Darby: Mr. Ward's right to impeach this or any other witness in this or any other proceeding is in no sense questioned. The method and subject-matter of his endeavor to do so, however, must conform to the rules of

[fol. 41] evidence. Further argument on the question, however, will be reserved for the proper tribunal; and the witness is instructed to answer the question to the best of his ability if an answer is insisted upon.

A. This patent specification does not set forth the fact that the picture negative and the sound negative may advantageously or necessarily be developed to different degrees of development, but the idea of printing separately from the sound negative and also from the picture negative on the same positive is very clearly expressed and covered in the claims.

X Q. 63. And as you read the specification and understand it, the object of doing it is to get the advantage of taking the sound record originally on a larger scale and then reducing that scale when reprinting on the combined picture and sound film?

A. That is the advantage of this method which is set forth in the specification, but it is not the only advantage.

X Q. 64. Now, with respect to your notebook marked "III," Exhibit No. 2, I do not understand that there are any entries in that notebook pertaining to the subject-matter of the invention here at issue. By that I mean the taking of sound and picture records on separate films and printing on a third film therefrom.

A. That is correct.

X Q. 65. From your experience, what is the maximum time that the picture record can be developed without fogging it?

[fol. 42] A. Well, that all depends on the brightness of the light on the object, the type of film used, and the type or degree of concentration of the developing solution.

X. Q. 66. Well, as a general proposition, can you develop the film up to 3½ to 4 minutes without fogging it?

A. Yes, usually can.

X Q. 67. Can it be developed up to 5 minutes without fogging it?

A. Yes; in certain developers it can be developed 10 minutes without fogging. Others developers would fog that same film in two or three minutes.

X Q. 68. You have made reference to the Mees developer —as I understand it, that being a developer that was recommended to you by Dr. Mees; and with that particular devel-

oper about how long could you develop a motion picture film without fogging it?

A. My recollection is that the note refers to film I sent to Rochester and was developed there by Dr. Mees. (The witness consults notebook.) The film that you referred to was actually sent to Dr. Mees at Eastman's in Rochester, and was developed there by him. The note makes no statement as to how long it was developed by Dr. Mees, but states that it was developed by him until it was quite fogged—too much for a picture film.

X Q. 69. Well, you are referring to a particular item under date of April 6, 1921. I am asking you as a general proposition from your experience with this Mees developer, which, from your notebooks, I have observed that you had subsequently used; and I ask you, from your experience [fol. 43] with that developer, how long did you find that a picture film could be developed without fogging it?

A. I find a reference under date of May 10, 1921, that I developed a film in the new (Mees) developer for 4 minutes. I take it that this was about the time that was recommended by Dr. Mees for developing the film in his developer, although the notes do not make reference to any such instructions.

X Q. 70. Do you remember approximately how long a picture film could be developed in the Mees developer without fogging it?

A. No, at this date I cannot. I find another reference under date of May 16, 1921:

"Developed 5 minutes but in *diluted* developer Mees type."

So I should infer that Mees' developer had to be diluted in order to permit even 5 minutes' immersion without fogging the film.

X Q. 71. That notebook that you are reading from, Exhibit No. 2, is entitled, is it not, "Films with Motion Picture Camera"?

A. Yes.

X Q. 72. That means that those films referred to in that notebook were films on which you took the sound on record run through your motion picture camera?

A. Yes.

X Q. 73. Or does it mean that you took the sound and also pictures?

A. My first work with this motion picture camera was recording sound alone. Then, later on, I photographed picture at the same time.

[fol. 44] X Q. 74. How long from the time you purchased the camera—which has been testified to as being February 18, 1921, did you continue to photograph sound alone and not pictures and sound? In other words, how long after the purchase of the camera did you start to photograph pictures and sound?

A. It was several weeks after I got the camera before I had the necessary attachment placed on same for recording sound on the same film with the picture.

Cross-examination closed.

Deposition closed.

(Signed) Lee DeForest.

Subscribed and sworn to before me this 6th day of February, 1928.

(Signed) Augusta P. Boos, (Seal.) Notary Public, Queens Co. No. 2011. Certificate filed New York Co. No. 1109. New York County Register's No. —. Commission Expires March 30, 1929.

DEPOSITION OF STEPHEN J. TORMA.

STEPHEN J. TORMA, called as a witness in behalf of the Party DeForest, having been first duly sworn, testifies as follows, in response to questions by Mr. Darby:

Direct examination.

By Mr. Darby:

Q. 1. Please state your full name; age; residence; and occupation.

A. Stephen J. Torma; 28; 109-04 108th Street, Richmond Hill, New York; occupation, salesman—photographic salesman.

[fol. 45] Q. 2. By whom are you employed?

A. Herbert & Huesgen Company.

Q. 3. How long you been employed by that company?

A. Twelve and a half years.

Q. 4. In 1920 and 1921, who was your superior in Herbert & Huesgen in your department?

A. In that particular department, Mr. A. J. Senner.

Q. 5. Did you during that period know or have any dealings with Dr. Lee DeForest?

A. Indirectly, Mr. Senner being in charge. He was the only salesman we had back there, my being more or less of an order clerk at that time and making out different orders given me by Mr. Senner; and, of course, I assisted—when we got a little busy, I assisted in selling; but I wasn't a full-fledged salesman at that time—I wasn't recognized as such, but I did assist quite some.

Q. 6. Is Mr. Senner still with Herbert & Huesgen Company?

A. No, he left the employ in November—the latter part of November, 1927.

Q. 7. Do you know of your own knowledge what was the nature of the dealings had by Dr. DeForest with Herbert & Huesgen?

A. Yes; I understand he was working on some talking moving pictures.

By Mr. Ward: Objected to as hearsay.

Q. 8. What were the dealings that Dr. DeForest had?

A. He had purchased films; had them developed.

Q. 9. Did Herbert & Huesgen develop films for him?

A. We did.

[fol. 46] Q. 10. You know that of your own knowledge?

A. I do.

Q. 11. And Dr. DeForest purchased films from Herbert & Huesgen?

A. Yes, sir.

Q. 12. You know that of your own knowledge?

A. I do.

Q. 13. Did you assist in any way in the transaction for Herbert & Huesgen?

A. As I say, indirectly, as I was under Mr. Senner. Mr. Senner had direct dealings with Dr. DeForest for the company, and I being there was, too, very, very much interested in what was going on. I took care of making out the necessary orders that were submitted to me in order to complete the transaction.

Q. 14. Did you ever see any of the film?

A. I did.

Q. 15. What was the appearance of it?

A. I recall seeing a film with lines on it. At that time I understood those lines were really voice recorded on the film.

By Mr. Ward: Objected to as hearsay.

Q. 16. Over what period of time were these transactions carried on?

A. Well, I recall from some part of—not quite the latter part of 1920 to about the middle of 1921.

Q. 17. And about the middle of 1921 were the transactions stopped? Did Dr. DeForest stop coming back?

A. Yes; as I understood, I think he was going abroad; in fact, he did go abroad, because when he came back he told us he had been over there; we missed him for quite a while. [fol. 47] Q. 18. And how frequently during that period, to your knowledge, was Dr. DeForest ordering either work done or equipment from Herbert & Huesgen?

A. Oh, approximately once or twice a week in small ways; sometimes in pretty large, especially when he bought the camera.

Q. 19. He bought a camera from Herbert & Huesgen before he went to Europe, did he?

A. Yes, sir.

Q. 20. Were you familiar with that transaction?

A. I was, very much.

Q. 21. And from your knowledge, was Dr. DeForest's activity with Herbert & Huesgen greater or less after he bought the camera?

A. It seems as though he was more active after he bought the camera, because he had more equipment to play with; in fact, he was anxious to see how this particular camera would work.

Q. 22. Did he buy more film after he bought the camera?

A. Yes, he was.

Q. 23. Did you do more developing for Dr. DeForest after he bought that camera?

By Mr. Ward: Objected to as grossly leading.

A. I believe so.

Q. 24. That is your recollection?

A. Yes, sir.

Direct examination closed.

Cross-examination.

By Mr. Ward:

X Q. 25. How old were you in January, 1920?

A. Going on my 21st birthday—Oh, in January, 1920, I was going toward my 20th birthday.

[fol. 48] X Q. 26. Where is Mr. Senner now?

A. Well, as I understand, he is home, 33 Sutton Place.

X Q. 27. You say that during this time you saw Dr. DeForest bring in film with lines on it?

A. Yes, sir.

X Q. 28. What kind of lines?

A. Oh, very faint lines; of course, very hard to describe; in a way they vanish at times.

X Q. 29. Where were these lines placed on the film?

A. My recollection, I think it is right towards the edge of the film.

X Q. 30. Do you know or are you guessing?

A. I'm not sure; towards the edge of the film—I know it wasn't in the center; whether left side or right side, I can't remember.

X Q. 31. What, if anything else, was on the film?

A. I don't remember seeing anything else.

X Q. 32. Now, did you make any notes or have any memorandum as to these transactions?

A. No; at that time I was just interested in an offhand way. Being that I was more or less an understudy, I wasn't very much interested, because I didn't think it would do me any good, anyhow. Mr. Senner, I believe, was very much interested, and he, of course, knows more than I do.

X Q. 33. And all you know about the matter is that you saw film, which Dr. DeForest either brought or sent there, with lines on it?

A. Yes, sir.

X Q. 34. And how are you able with any certainty to fix the dates you have given as commencing about the latter part of 1920?

A. Well, I remember it was some time before Dr. DeFor-[fol. 49] est bought the camera from us. He had been playing with something else—whether it was a camera he had borrowed or owned previous to that, I don't know; but he had been playing with films along those lines, and then he bought the camera and continued with his experiments.

X Q. 35. What is the date on which he bought the camera?

A. February 18, 1921. I looked up those records not long ago just to refresh my memory.

X Q. 36. Did you know if prior to that he was playing with films of the same kind?

A. Yes, experimenting on this talking film.

X Q. 37. How do you know it was talking film?

A. I was made to understand it at that time.

X Q. 38. You don't know it was talking film, though?

A. I haven't actually seen it work, but I have known that it was those lines Doctor was working on.

X Q. 39. You were told that?

A. No, I overheard different talks between Mr. Senner and Dr. DeForest at that time, and from their talks I knew that it was talking film they were working on.

X Q. 40. And how do you know that he brought these films in up to about the middle of 1921?

A. Well, it was pretty near a year from the first time Doctor came in with his first experiments until about the last time; I should judge between 10 and 12 months. In all that time he was bringing in films.

X Q. 41. Are you able to positively swear now that he was bringing in film in July, 1921?

A. I wouldn't say July, but some time the latter part of 1920.

[fol. 50] X Q. 42. Are you able to positively swear now that he was bringing in film in June, 1920?

A. No, I can't say.

X Q. 43. Are you able to positively swear now that he was bringing in film in June, 1921?

A. June, 1921? No, I wouldn't swear to that, either. I know it was around the latter part of 1920 and the early part of 1921.

X Q. 44. Would you be willing to swear positively from your knowledge that he brought in films of that character that you have testified about, in April, 1921?

A. Oh, no—April, 1921? Yes, because the Doctor bought the camera in February and was playing with it at least three or four months after.

X Q. 45. How do you know it was in April as distinguished from February or March?

A. I have no record to refer to, but I am quite certain.

X Q. 46. In other words, the best you can say under oath is that during some time between January, 1921, and the

end of 1921, Dr. DeForest brought some film in of the character you have described?

A. From about—not the end of 1921, no.

X Q. 47. Up to when?

A. Up to about two or three months after he bought the camera—February, March, April—just about two or three months after. Later, I believe, the Doctor sailed or had plans of going to Europe and went; and we haven't seen him after that for about a year, I guess.

X Q. 48. That is all you know about the situation?

A. That is as much as I can remember.

X Q. 49. And you were a boy of about nineteen at that time?

[fol. 51] A. That's right.

X Q. 50. And are testifying entirely from memory over a period of about seven years; is that right?

A. Between seven and eight years.

Cross-examination closed.

Redirect examination.

By Mr. Darby:

R. D. Q. 51. You referred, in your cross examination, to having recently looked up when Dr. DeForest purchased the camera. You did that at Dr. DeForest's request, did you not?

A. I did.

R. D. Q. 52. And you made a written memorandum of the record of the purchase?

A. We did. I made a memorar lum myself, and then the records are still at Herbert & Huesgen of the original date of purchase.

R. D. Q. 53. And you made a memorandum which you copied from the record and gave that memorandum to Dr. DeForest?

A. I did—no, I had it made up for me by one of the office boys.

R. D. Q. 54. Is that the memorandum you gave Dr. DeForest?

(Counsel hands memorandum to witness.)

A. I did. That is made out by the man who makes the camera sales. I phoned up for it.

R. D. Q. 55. And do you know whether everything on that memorandum was taken from the records of Herbert & Huesgen?

A. At that time the Doctor bought other materials which were not entered, such as films and accessories we do not keep a record of—those records are thrown out every so [fol. 52] many years; but camera sales they try to keep as long as they can, because they have a serial number.

R. D. Q. 56. My question is whether everything on that written memorandum you gave Dr. DeForest was copied from the records of Herbert & Huesgen.

A. Exactly.

R. D. Q. 57. What is the date, February 18, 1921? Is that the date of purchase?

A. That's the date of purchase, yes, sir; but the camera was charged to the DeForest Radio Tel. Co.—right there (witness indicates on memorandum).

R. D. Q. 58. And what was the name?

A. Ernemann Model A Motion Picture Camera.

R. D. Q. 59. Was that given a number?

A. Serial Number 732021.

R. D. Q. 60. And what is that next line (indicating on memorandum)?

A. That's the lens that was fitted on that camera—Carl Zeiss Tessar.

R. D. Q. 61. And was the lens given a number?

A. Yes, sir—271112.

R. D. Q. 62. And was the $330 the purchase price of the camera?

A. The camera at that time listed for $300, and I believe the additional $30 is for the better lens.

By Mr. Darby: I offer in evidence the memorandum referred to; and ask that the same be marked, "DeForest Exhibit No. 3."

By Mr. Ward: Objected to as not proven, as this witness has stated either on or off the record that he did not make that memorandum, but, as I understood, that he phoned up and had some one make it for him.

[fol. 53] R. D. Q. 63. Did you compare the memorandum with the original record in Herbert & Huesgen's?

A. I didn't, because the man who makes our entries has no reason to put in any other serial numbers or make any irregular entry on the copy.

R. D. Q. 64. What was the name of the man who made the memorandum?

A. Mr. Cruset.

R. D. Q. 65. To clear up the matter, I will put another question. You actually saw the DeForest record, did you not?

A. At the time of purchase, yes.

R. D. Q. 66. But you haven't seen it since?

A. No.

R. D. Q. 67. I am going to ask you, during the noon adjournment, to personally compare this record, which is marked DeForest Exhibit No. 3, with the original record at Herbert & Huesgen Company, so as to enable you to state whether or not this memorandum is accurate and complete as to the purchase of the camera.

A. I will do that.

R. D. Q. 68. You have referred to seeing the lines on the films that Dr. DeForest brought to Herbert & Huesgen?

A. Yes.

R. D. Q. 69. Were those lines on the film that Dr. DeForest brought, or were they on the film after Herbert & Huesgen had developed the film?

A. Well, I have seen them both ways, if my memory is right. I remember we developed some and they looked like nothing to me—ordinarily we expect to see pictures on film. Then there were times when Doctor brought in films—whether there was a picture on it or not I can't really remember.

[fol. 54] R. D. Q. 70. I am not so much concerned with the picture as I am with these lines you have referred to, and what I am trying to bring out is that you never examined the films before they were developed, did you?

A. You couldn't, you would ruin them.

R. D. Q. 71. Have you ever testified in court or in any court proceeding of this nature before?

A. Never.

R. D. Q. 72. And you, of course, are not interested one way or the other as to the outcome of this proceeding?

A. Not in the least. In fact, I am losing a lot of time now when I could be making money.

Redirect examination closed.

Recross-examination.

By Mr. Ward:

R. X Q. 73. Was this camera which was purchased a motion picture camera?

A. Yes, sir.

R. X Q. 74. Did you say that prior to this DeForest had any camera?

A. Whether he had or not I never seen it. He must have used something in the way of a moving picture camera to do what he did.

R. X Q. 75. You said he was playing around with motion pictures, didn't you?

A. It must have been a moving picture camera because film won't run through anything else I can think of.

R. X Q. 76. Do you remember when the DeForest factory or laboratory, or whatever it was, at High Bridge burnt?

A. No, that's news to me; I didn't know they had a fire.

[fol. 55] R. X Q. 77. You didn't know they had a fire there?

A. No.

R. X Q. 78. Are you a graduate of any school or institution?

A. No.

R. X Q. 79. Do you recall on what day Lincoln's Birthday falls?

A. February 22nd—February 12th, pardon me.

R. X Q. 80. When did you go with this Company?

A. I can tell you right to the date, July 13th, 1915.

R. X Q. 81. And are you still with them?

A. Yes, sir; $4 a week at that time.

Recross-examination closed.

Re-redirect examination.

By Mr. Darby:

R-R. D. Q. 82. Were you ever up to the DeForest factory on Sedgwick Avenue?

A. Never, no.

R-R. D. Q. 83. Do you know where it is?

A. I can find it, Sedgwick Avenue, yes. It's up in the High Bridge section.

Re-redirect examination closed.
No re-recross examination.
Deposition closed.

Signature of the witness waived by consent of counsel.

STIPULATION

It is stipulated that if Stephen J. Torma was recalled to testify concerning the data contained on DeForest Exhibit No. 3, he would testify that the data thereon contained [fol. 56] is accurately transcribed from the record of Herbert & Huesgen, and that he had examined the record and found that to be the case.

By Mr. Darby: I am advised by Mr. Torma that the original record from which DeForest Exhibit No. 3 was copied is at the office of Herbert & Huesgen, 18 East 42nd Street, New York, N. Y., and is available to inspection by opposing counsel at any time within business hours, the record being in a large book forming part of the permanent records of Herbert & Huesgen.

DEPOSITION OF WILLIAM E. GARITY

WILLIAM E. GARITY, called as a witness in behalf of the Party DeForest, having been first duly sworn, testifies as follows, in response to questions by Mr. Darby:

Direct examination.

By Mr. Darby:

Q. 1. Please state your name, age, residence and occupation.

A. William E. Garity, 439 Bainbridge Street, Brooklyn, age, 28, occupation, engineer.

Q. 2. By whom are you employed?

A. At present time I am a free lance.

Q 3. By whom were you employed in 1920 and 1921?

A. DeForest Radio Tel. & Tel. Company.

Q 4. While so employed did you have anything to do with talking motion picture problems?

A. I assisted Dr. DeForest in all his experimental work.

Q. 5. Where?

A. At Sedgwick Avenue, at the DeForest plant.

[fol. 57] Q. 6. Were any records kept of the experimental work that Dr. DeForest did?

A. The Doctor kept his records of his experiments in a series of stenographers' notebooks.

Q. 7. Did you have occasion to inspect those notebooks during those experimental periods?

A. They were on hand at all times. I could read them and read the records of experiments made.

Q. 8. Did you conduct any experimental work under the direction of Dr. DeForest on talking motion pictures?

A. In that way, no. I worked with the Doctor. I made no independent researches; I worked with him entirely.

Q. 9. Did you do any work, the results of which, you know of your own knowledge from your inspection of the notebooks, were recorded in the notebooks?

A. The results? I will put it this way: The Doctor used to use my voice as a check against his in recording the film, so he could check the difference in quality, and for defects produced by natural reproduction; and all such records of those tests were recorded in those notebooks.

Q. 10. And what method, if any, was employed by Dr. DeForest, to your knowledge, in making records in the notebook?

A. Why, generally, the experiment to be conducted was the notation that was made in pencil, and the results of the experiment noted in ink.

Q. 11. Then, as I understand it, as a general method there would be an entry of an experiment before it was actually conducted?

A. Yes; an idea would be had and a note would be made in pencil and space left for the results: there might be two [fol. 58] or three subjects noted before any tests were made or any experiments conducted on those subjects. One experiment might suggest several, and notes would be made on that, tests to be made in the future.

Q. 12. How long after an experiment was outlined in the notebook was it customary to record the results?

A. At the earliest possible moment. It might be a day or two days after the idea, so as to make a continuous run of experiments on the work; and it might be that one idea might be two days before you could work it out—two days later.

Q. 13. You are familiar with patent claims, are you?

A. Yes.

Q. 14. Accepting my statement that the subject-matter here in controversy has to do, in part at least, with making separate records of sound and picture for talking motion pictures, was that a subject that you at any time in 1920 or 1921 were conversant with?

A. In this way: We had always found—it seemed to work out that the technique of handling film for voice would be radically different from that for a satisfactory picture, and it suggested itself at that time, when we first realized that at some future time provisions would have to be made for handling the development—that is, the developing of the voice record would have to be separate from the developing of the picture.

Q. 15. Why was that?

A. Because the voice record—the good voice records that we got—required overdark exposure, which would usually be so dark it would prohibit the use of that particular type [fol. 59] of developer to be used on the picture—you wouldn't get anything on the screen—it would practically fog the film.

Q. 16. What is meant by fogging the film?

A. Fogging is where you get beyond the optimum point of developing and start—and cause a reaction to take place in your basic silver solutions that haven't already been acted upon by the photograph.

Q. 17. Did you keep conversant with the progress that Dr. DeForest was making in his work on talking motion pictures?

A. Yes; my laboratory was in the same room with the Doctor.

Q. 18. Did you keep conversant with the results that Dr. DeForest was recording in his notebooks?

A. I read every record that he made at that time.

Q. 19. And did you keep abreast of the entries in the notebooks?

A. Yes.

Q. 20. Did Dr. DeForest ever tell you of any plan that he had in mind for getting over this difficulty that you have described?

A. He stated the necessity of handling the two films, that is, the voice and the picture, differently; and at some time sooner or later, when the opportunity presented itself, he

would develop the necessary mechanical apparatus to develop first the picture and then the voice and then superimpose the two on a single negative, from which we would make the positives. The actual mechanical work wasn't done at that time, because there was no necessity for it.

Q. 21. Do you recall when Dr. DeForest made this disclosure to you and if, to your recollection, he made any record of such a solution?

[fol. 60] By Mr. Ward: Question objected to as vague and indefinite, and as not defining what is meant by the disclosure.

A. I can't state any definite time, because all during that period we realized the necessity of it, and as I recall, Doctor made some notes as to method of developing mechanical technique for taking two records and producing a single film from them. I say "two records"; I mean by that one voice record and the picture.

Q. 22. Can you give any definite time before which you are certain you discussed this matter with Dr. DeForest?

A. Well, I would place the first time we talked about it around the holidays in 1920.

By Mr. Ward: Objected to as contrary to the preliminary statement.

Q. 23. I call your attention to DeForest Notebook No. II, which is marked here in evidence as DeForest Exhibit No. 1, which has entry dated December 26th; and I call your attention to the entry at the bottom of the page in pencil, and will ask you if you ever saw that entry before; if so, when for the first time?

A. Well, I would say I saw it either the same day or within the second or third day following—right at the time, because I was conversant with the notebooks at all times.

Q. 24. Are you familiar with the subject-matter of the entry?

A. Yes.

Q. 25. Do you recognize that notebook?

A. I do.

Q. 26. Is that one of the—

[fol. 61] A. (Interrupting:) This is the type of book that was used.

Q. 27. Do you recognize that as one of the notebooks in which Dr. DeForest kept all the work he was doing on talking motion picture work in 1920 and 1921?

A. I do.

Q. 28. I call your attention to the entry at the bottom of page which is marked "2" in red pencil; and ask you if you can positively state that you saw that entry on or about the date thereof?

By Mr. Ward: Objected to as leading.

A. Yes.

Q. 29. Have you a definite recollection of discussing the subject-matter of that entry with Dr. DeForest?

By Mr. Ward: Objected to as leading.

A. Not this particular entry. I have no particular recollection of this definitely.

Q. 30. Have you a definite recollection of discussing with Dr. DeForest on or about that time the subject-matter of the entry?

By Mr. Ward: Objected to as leading.

A. This subject-matter was discussed continuously on and off throughout that period. I cannot name any one particular time on which we discussed it.

Q. 31. I call your attention to the entry at the bottom of page marked "3" in red pencel; and ask you if you can recall having read that entry on or about the date thereof.

By Mr. Ward: Objected to as leading.

A. Yes.

[fol. 62] Q. 32. And have you a definite recollection of having discussed the subject-matter to which that entry is directed with Dr. DeForest on or about that period?

By Mr. Ward: Same objection.

A. I would give you the same answer as on the other question.

Q. 33. I call your attention to the last entry in the book, on page marked "4" in red pencil. Do you recall having read that entry on or about the date thereof?

By Mr. Ward: Same objection.

A. I do.

Q. 34. I ask you to examine DeForest Notebook No. III, which is marked DeForest Exhibit No. 2 in this case; and ask you if you can identify that notebook as one of the notebooks of Dr. DeForest with which you are familiar and kept by the Doctor at that time.

A. I can; I do.

Q. 35. Am I correct in understanding that your laboratory was in the same room with Dr. DeForest?

A. Yes, sir.

Q. 36. During that period?

A. Yes, sir.

Q. 37. What proportion of Dr. DeForest's time, from your observation, was he devoting to phonofilm problems during that period?

By Mr. Ward: Question objected to as vague and indefinite.

A. That was his entire work outside of a few moments he might spend in administration—that was required for [fol. 63] the administrating of the radio work; his entire research work was devoted to phonofilm.

Q. 38. And how long did his application to phonofilm work last, as near as you can recall?

By Mr. Ward: Same objection.

A. Lasted until he went to Europe at that time; and he continued his work in Europe.

Q. 39. About when, according to your recollection, did Dr. DeForest go to Europe?

A. Some time in the summer of 1921.

Direct examination closed.

Cross-examination.

By Mr. Ward:

X Q. 40. Why is it that you were able to identify the entry on the last page of notebook, Exhibit No. 1, notebook marked No. II, the page of the entry being marked "4" in red pencil, as of the date of April 6th under which it appears, and yet you were unable to identify the other entries, as I understood you, as of the dates under which they appear?

A. I don't think I identified them exactly as to date. I can't do that. I can testify to the record—the running record. I was conversant with that record when made, but to say that a particular record 2 or 3 or 4 was made on a certain date, I can't testify to that. My memory doesn't go back that far.

X Q. 41. In other words, what you know about this notebook is that Dr. DeForest was keeping a notebook of this character in 1921 and 1922, making entries in it, and that you were in a general way conversant with the notebook at that time?

A. Exactly.

[fol. 64] X Q. 42. But you can't swear that any one of these particular entries are now exactly in the form in which they were entered by Dr. DeForest?

A. I would. Yes, I would say that; that is, the subject-matter in these notebooks covers that general period.

X Q. 43. I didn't ask you that. I asked you: Could you state now that this writing in these entries is exactly what it was when it was made?

A. Yes.

X Q. 44. How can you make that statement?

A. Well, due to the fact that I am conversant with the entire book in general. I know that was the subject-matter covered at the time.

X Q. 45. Well, is your memory sufficiently good to memorize these entries?

A. No, I can't memorize the entries.

X Q. 46. You couldn't undertake to tell me what is on a page I show you without reading it?

A. No, not without reading it. I can tell you in general what the notebook covers from start to finish.

X Q. 47. And while you know that Dr. DeForest was making experiments on photographing sound during this period and keeping a notebook of this character, you can't state that the particular entries to which you have been directed were made on the particular dates under which they appear?

A. Not to definitely state the exact time to the day.

X Q. 48. Did you make any entries in this notebook yourself?

A. I did not.

X Q. 49. You made some reference to the fact that the proposed experiments were usually written in pencil and

[fol. 65] the results in ink as a general proposition, didn't you?

A. That is my recollection.

X Q. 50. Doesn't it appear to you that the reverse seems to be true in most of these pages?

A. It does in that book.

X Q. 51. As I understand your testimony, all the experiments pertaining to the phonofilm matters that were conducted during the period covered by this book, Exhibit No. 1, October 15, 1920, to April 6, 1921, were recorded in this book?

A. Yes.

X Q. 52. And as I understand your testimony, during the period covered by this book, at the time therein, Dr. DeForest was engaged in developing films having sound records thereon; and that he stated that later on, when occasion arose, he intended to take the picture film and sound film separately and superimpose or photograph the two on another film?

A. In general. Let me answer that: The records that the Doctor made were purely sound records. He would run as many as eight records on a single strip of film. The voice records weren't good, and we had to first develop the technique of making a sound record on the film. The matter of timing it in with the picture was understood; it could be done; that is, using a sound camera and a motion picture camera for talking motion pictures was only a matter of mechanical convenience of connecting the two cameras on the same drive shaft to get synchronization; so it wouldn't be necessary.

X Q. 53. And he intended to do that later on?

A. There was absolutely no use doing it then. That [fol. 66] would be unnecessary expense, and it was concededly so simple there wasn't any use buying a camera to take pictures when we didn't have a sound record to begin with.

X Q. 54. When you didn't have what to begin with?

A. Didn't have a decent sound record, let me qualify it.

X Q. 55. And that photographing of the pictures and sound on separate records and then reprinting from those on single records was not tried out?

A. It was not. It was conceded it was so simple it wasn't necessary going to the expense.

By Mr. Ward: The last part of the answer is objected to as volunteered and not responsive.

X Q. 56. You say it was a simple matter to mechanically connect up the two cameras, one with a sound record and one with a picture record, to run them synchronously. How much of a job do you think that would have been?

A. It just requires placing of a sound camera and a moving picture camera adjacent to one another and connecting them mechanically by a solid shaft—I won't say solid shaft—a shaft with a flexible coupling—to allow for mechanical play, and drive either one with the other. Both machines would run the same footage, and as a result you would have the same amount of film and picture taken at the same time.

X Q. 57. Is that much of a job, to connect the two together?

A. It isn't any job.

X Q. 58. What do you think it would cost?

[fol. 67] A. It would first cost—the actual connection wouldn't amount to much—a mechanic could do it in a day—but the primary cost is the purchase of a moving picture camera, which runs into two or three thousand dollars.

X Q. 59. Dr. DeForest bought a motion picture camera, the testimony here shows, for $330. Did he have any motion picture camera prior to February, 1921?

A. No, sir; not to my recollection.

X Q. 60. With what was he taking motion picture sound film records prior to February, 1921?

A. With what we term now a "sound camera"—purely a device to record sound.

X Q. 61. Did it have sprocket wheels?

A. It had sprocket wheels—everything necessary to drive the film and just record sound alone.

X Q. 62. Could that have been connected up with a motion picture camera synchronously?

A. Provided, in that case, the sound camera would have to be placed in an adjacent room and the drive shaft placed through the adjacent wall, the sound camera in one room and the motion picture camera in the other room, in order to preserve a light-proof condition on the sound camera. It wasn't manufactured and made to be worked in the open air; it had to have a dark room.

X Q. 63. But that sound camera, as I understand you, could be connected up synchronously with a motion picture camera?

A. By means of a shaft and gears.

X Q. 64. And the work entailed the time of a mechanic for about a day or two?

A. Yes.

X Q. 65. And that was not done up to when?

[fol. 68] A. It was never done in my experience here with the DeForest Radio.

X Q. 66. And you were there for how long?

A. For five years.

X Q. 67. You were there from the latter part of 1920?

A. 1919.

X Q. 68. Up until when?

A. 1924.

X Q. 69. And these various records that this notebook refers to as films having sound records thereon are simply films with sound records on them without picture records?

A. At that time. We subsequently made pictures.

X Q. 70. And those various experiments that were conducted during this time to determine the proper density of record of sound on these films were necessary in order to carry out Dr. DeForest's inventions with respect to recording sound on film, were they not?

A. Exactly. The making of pictures was a foreign field, and was already well covered, and there was no necessity of trying to improve on that.

X Q. 71. The prime thing that he was working on during the period covered by these notebooks was the problem, as I understand it, of merely recording sound on film properly?

A. Developing the technique of recording sound.

X Q. 72. And later on it was his intention to get at the idea of adapting this to talking movies by taking the sound record and picture record and printing them on a single film?

A. Yes.

X Q. 73. When was the fire at High Bridge?

[fol. 69] A. The latter part of 1921, I recall.

X Q. 74. Do you remember in what month?

A. I think it was in September or November—somewheres in the fall; we had just finished inventory; that is generally taken in the fall.

X Q. 75. Did the whole factory burn down?

A. Well, it burned practically—wrecked the entire plant.

X Q. 76. Where were these notebooks kept prior to that time?

A. We have an office building, 1391 Sedgwick Avenue—I won't be sure of the address—a separate building aside from the factory.

X Q. 77. Then, if anyone else has testified that in that fire all of Dr. DeForest's notebooks pertaining to experiments were destroyed, that would be untrue?

A. Notebooks as far as phonofilm, yes.

X Q. 78. The phonofilm notebooks were all preserved—saved?

A. The main manufacturing plant, containing all manufacturing units, including the vacuum tube division, was at 1391 Sedgwick Avenue. Dr. DeForest and my own laboratory was located at 1415—and both these addresses are subject to question as to the exact number—in a two-story building, of which the upper floor was used as the office of the radio plant. All phonofilm experiments as to film recording and reproducing were carried on at 1415 Sedgwick Avenue. The manufacturing and mechanical work done for phonofilm, along with all other developments of the plant, were done at 1391.

X Q. 79. Which burnt down?

A. 1391 burnt.

[fol. 70] X Q. 80. So that the building in which all of the phonofilm experiments were made was not burnt?

A. Exactly.

X Q. 81. And all the records in that building were not destroyed?

A. Not a thing. It was 800 feet from the other plant.

X Q. 82. No chance of that fire having destroyed records pertaining to phonofilm work? By that I mean the recording of sound.

A. I don't think so; no, in fact.

X Q. 83. And you were intimately connected with Dr. DeForest during this time—1919-1920?

A. Yes, sir; until the Doctor went to Europe.

X Q. 84. That was in July, 1921?

A. Some time in the summer of 1921.

X Q. 85. And you knew that all of these records pertaining to the recording of sound—phonofilm—were kept in this building, 1415 Sedgwick Avenue, which was not burnt?

A. Right. Allow me to qualify just on one point there. The fire at the plant started in the vacuum tube division, where some experiments were being made on the photion tube with high frequency, and that plant was completely destroyed.

X Q. 86. Were the records on the tubes kept in that department or in this No. 1415?

A. The mechanical records of the details of manufacturing, amounts of gas and pressure, etc., may have been kept in that record there. To my knowledge, they were not kept in our own laboratory.

X Q. 87. But the records of the experiments on those tubes and attempts to record sound were kept there?

[fol. 71] A. The results were kept in 1415. The records of the manufacturing and experimenting in the manufacture of those lamps may have been destroyed.

X Q. 88. The records kept of the experiments in the manufacture of the tube may have been destroyed in the fire; but the records kept of the testing of those tubes for recording sound were in the building, 1415, which was not burnt?

A. These results of the tubes were kept in those books (witness points to DeForest Exhibits 1 and 2.)

X Q. 89. About how much money would you estimate Dr. DeForest was spending a year in 1921 in his business of experimenting on phonofilm work?

By Mr. Darby: Objected to as incompetent.

A. Well, I would answer that: Plenty. As to the exact amount, he might have spent $20,000 in that year.

X Q. 90. Would you say he spent at least $10,000.

A. I would say, yes, $10,000.

Cross-examination closed.

Redirect examination.

By Mr. Darby:

R. D. Q. 91. You never saw any notebooks of Dr. DeForest's pertaining to the vacuum tube experiments, as distinguished from recording experiments, in 1415 Sedgwick Avenue, did you?

A. No, none at all.

R. D. Q. 92. You knew that Dr. DeForest was keeping such notebooks, did you not?

A. I wouldn't say I knew positively he was keeping it, [fol. 72] because that work was done by Mr. Coyer—Henry Coyer—in conjunction with Doctor.

R. D. Q. 93. Then, you don't know of your own knowledge whether or not there were any such notebooks?

A. No.

R. D. Q. 94. That was outside your field?

A. Outside my field. I was not concerned with that end of the division. I might state as a matter of record that I was also employed—was in charge of the test division of the radio factory; and my work with Dr. DeForest was incidental to that. I wasn't purely Doctor's assistant in this work.

R. D. Q. 95. What is your recollection as to whether or not the fire at Sedgwick Avenue occurred before Dr. DeForest went to Europe or afterwards?

A. I think it was after Doctor went—after, I would say.

R. D. Q. 96. Is your recollection quite clear on that?

A. No.

R. D. Q. 97. When was the DeForest factory moved from Sedgwick Avenue to New Jersey, to the best of your recollection?

A. I believe it was in 1922.

R. D. Q. 98. And did you move to New Jersey with the DeForest Radio Company?

A. Yes.

R. D. Q. 99. And did Dr. DeForest maintain a laboratory, to your knowledge, in New York for phonofilm work on his return from Germany, apart from the factory in New Jersey?

A. From the time Doctor left the Sedgwick Avenue plant to go to Germany, he never came back and did very much work—in fact, he did no direct phonofilm work—at the radio plant. I believe he opened a studio here in 48th Street.

[fol. 73] R. D. Q. 100. Then, of your own knowledge, you are not familiar with Dr. DeForest's work after that time?

A. From the time he left for Germany I know nothing intimately about his activities.

R. D. Q. 101. You were not intimately familiar with his activities?

A. It was not intimately familiar with his activities.

Redirect examination closed.

Recross-examination.

By Mr. Ward:

R. X Q. 102. Dr. DeForest went to Germany, as I understand it, the last day of July, 1921?

A. About then; in the summer.

R. X Q. 103. And you said the records of the making of tubes were kept in the building that burnt? But as I understand it, all the records and notes of tests and use of tubes for recording sound were in the building that was not burnt?

A. Exactly.

R. X Q. 104. When did Dr. DeForest make his first film sound record of a character which was audible so that you could recognize the voice or the speaking?

A. Well, all of his—I would say 90 per cent. of the records that he made you could recognize a voice, and if you heard it two or three times you could figure out what was being said.

R. X Q. 105. When did he first make a sound film record in which you could recognize that the sound reproduced from the record was the sound intended to be recorded on the film?

A. Very early in 1920.

R. X Q. 106. What date?

[fol. 74] A. I wouldn't give you a date. Say April or May—somewheres along there.

R. X Q. 107. Would it have been earlier than that?

A. It might have been earlier than that, but I didn't hear it.

R. X Q. 108. But you say you were there with him all the time.

A. I was there with him all the time; I went with him in December, 1919.

R. X Q. 109. So if he made one before that date you wouldn't know anything about it?

A. No.

R. X Q. 110. But you were with him as early as January, 1920?

A. Yes. I was not as intimate with his work then as I was a couple of months later, being a new employee.

R. X Q. 111. And the first one you heard of a character you could recognize reproduced sound as that intended to

be recorded was, according to your information, about April or May, 1920?

A. Yes.

Recross-examination closed.

Re-redirect examination.

By Mr. Darby:

R-R. D. Q. 112. Do you recall whether or not Dr. De-Forest was at the factory during the period of the fire?

By Mr. Ward: Objected to as asking for information contrary to the witness' previous answers.

A. I don't recall the Doctor being around. He may have been or may not have been. I am not entirely certain. I don't recall him being there.

[fol. 75] R-R. D. Q. 113. Did you know Mr. Klein at the factory?

A. Dick Klein, yes.

R-R. D. Q. 114. He had a managerial position, did he not?

A. General manager.

R-R. D. Q. 115. And do you recall that after the fire there was some discussion as to whether or not the factory would be rebuilt?

A. Yes.

R-R. D. Q. 116. Do you recall whether or not a rather violent disagreement took place between Mr. Klein and one or more officials of the Company on that occasion?

A. I can't say that I do.

R-R. D. Q. 117. I am endeavoring to refresh your recollection as to the date of the fire. Do you recall a New Year's Eve party that was held at 1415 Sedgwick Avenue?

A. Very, very well.

R-R. D. Q. 118. Was more than one New Year's Eve party held at 1415 Sedgwick Avenue?

A. No.

R-R. D. Q. 119. Was that New Year's Eve party before or after the fire?

A. That was before the fire. The fire occurred about three or four days after. That's right, because inventory was taken during Christmas week, and this party was New

Year's Eve; and the fire occurred, not in the fall, but in January.

R-R. D. Q. 120. Was Dr. DeForest at that party?

A. Very much.

R-R. D. Q. 121. Then, what is your present recollection as to the year in which the fire occurred, having in mind that the evidence in this case is that Dr. DeForest was in [fol. 76] Germany New Year's Eve of 1921-1922?

A. The fire was about the 3rd, 4th, or 5th of January, 1921, because we had just finished taking inventory.

Re-redirect examination closed.

Re-cross-examination.

By Mr. Ward:

R-R. X Q. 122. What was the occasion for this New Year's Eve party?

A. I don't suppose there was any excuse for it, except it was New Year's.

R-R. X Q. 123. Why did you have it on this particular New Year's rather than New Year's of 1920 or 1919?

A. Well, the subsequent results impressed it on my memory very much. The connection is this: I went with Dr. DeForest in December, 1919. In 1919 there was no party—I was only there three or four days. In 1920, no there was no party on New Year's. In 1921 we were preparing—thinking about moving to Jersey City—thinking about moving the plant—and there was only one party were had there at Sedgwick Avenue; so it would have to be at that date.

Re-cross-examination closed.

Deposition closed.

(Signed) William E. Garity.

Suscribed and sworn to before me this 24th day of February, 1928. (Signed) Augusta P. Boos. (Seal.) Notary Public, Queens Co. No. 2011. Certificate filed New York Co. No. 1109. New York County Register's No. —. Commission expires March 30, 1929.

Recess

[fol. 77] DEPOSITION OF ADOLPH G. SENNER

ADOLPH G. SENNER, called as a witness in behalf of the Party DeForest, having been first duly sworn, testifies as follows, in response to questions by Mr. Darby:

Direct examination.

By Mr. Darby:

Q. 1. Please state your full name; age; residence; and occupation.

A. Adolph G. Senner; age, 38; address, 33 Sutton Place, New York City; occupation, motion picture camera man.

Q 2. Are you a member of the Society of Motion Picture Engineers?

A. Yes.

Q. 3. By whom were you employed and in what capacity in 1920 and 1921?

A. Herbert & Huesgen Company, 18 East 42nd Street, as manager of the Motion Picture Department.

Q. 4. You are not employed by Herbert & Huesgen now, are you?

A. No, I left them.

Q. 5. What motion picture camera work was done by Herbert & Huesgen at the time you were in their employ?

A. Well, we supply cameras, projectors, and do developing, printing, making titles.

Q. 6. Sell film?

A. Experiment, and sell film.

Q. 7. During any part of 1920 or 1921 did you come in personal contact with Dr. Lee DeForest?

By Mr. Ward: Objected to as leading.

A. I did.

[fol. 78] Q. 8. In what respect?

A. As a customer.

Q. 9. What did he buy?

A. He purchased a camera—motion picture camera.

Q. 10. Did he purchase anything else?

A. He purchased films; he purchased developers.

Q. 11. Did he have any developing work done?

A. He did quite frequently.

Q. 12. Did you personally have charge of the dealings with Dr. DeForest for Herbert & Huesgen Company?

A. Yes.

Q. 13. It has been testified in this case that Dr. DeForest bought an Ernemann motion picture camera for $330. Did you sell that camera to Dr. DeForest?

By Mr. Ward: Objected to as leading.

A. I did.

Q. 14. It has also been testified that this camera was sold to Dr. DeForest on February 18, 1921, according to the records of Herbert & Huesgen. Did you have anything to do with securing the date of that sale from Herbert & Huesgen?

By Mr. Ward: Objected to as leading.

A. I did.

Q. 15. Did you do any developing work for Dr. DeForest before the camera was purchased?

By Mr. Ward: Same objection.

A. Frequently.

Q. 16. What was the nature of the work?

[fol. 79] A. The nature was standard motion picture film in short lengths, containing voice record—sound record—as far as I could tell at the time.

Q. 17. Did they, prior to the purchase of the camera, contain any pictures?

A. Not to my recollection.

Q. 18. And after the purchase of the camera, did Herbert & Huesgen still continue to do developing work?

A. At intervals.

Q. 19. Did that work include the sound records?

A. Yes, pictures and sound records on the one film.

Q. 20. On the one film?

A. On the one film.

Q. 21. How soon after the purchase of the camera did you do developing work where the picture and sound were on the same film?

A. Within a few days.

Q. 22. Did you examine the film after it was developed?

A. No, but I called Dr. DeForest's attention to the fact that the pictures were very much under-exposed.

Q. 23. Well, just describe in non-motion-picture language how the films looked.

A. Dr. DeForest, as far as I could gather at the time—he never told me exactly how his method worked—but he tried to get a film record showing the picture and the sound record; and when he brought in this film, I pointed out to him, and he himself realized, that the picture was very much under-exposed; in other words, had not sufficient light to record properly on the film.

Q. 24. But how was the sound record?

[fol. 80] A. The sound record was rather dense. In other words, the two were very much in contrast,—one was over-exposed, and the other was under-exposed,—which meant one had too much light and one had too little light.

Q. 25. And I understand that you called Dr. DeForest's attention to that fact.

A. Yes.

Q. 26. Did Dr. DeForest describe to you any way that he had in his mind to overcome that difficulty?

A. Well, he had many ideas, and amongst others he had the idea of using a separate film for the picture and for the sound.

Q. 27. That is, one film for the picture and one film for the sound?

A. Yes; which I immediately discouraged on account of the impracticability to my mind; and I recommended the use of more powerful lights for his subject, in order to equalize the exposure—bring them up to the strength of the sound recording exposure.

Q. 28. Did Dr. DeForest say anything to you as to whether he was discouraged in his idea or was more in favor of yours?

By Mr. Ward: Objected to as calling for hearsay.

A. I don't think we discussed it very much, as far as I remember. He had his own mind about the subject, and I had my own opinion.

Q. 29. How soon after the purchase of this camera did this occurrence take place,—your calling his attention to the film?

A. As far as I remember—he was very anxious to see [fol. 81] first results naturally—this question came up and my recommendation was made at perhaps the first or sec-

ond attempt; it must have been within a week or ten days of the purchase of the camera.

Q. 30. Did Herbert & Huesgen continue to sell Dr. DeForest supplies and develop film subsequent to that time?

A. Yes.

Q. 31. How frequently? That is, once a week, or what?

A. We continued to sell him supplies, but I think the developing work was less frequent. It is my recollection he purchased some developing outfit of his own—special apparatus to do it in longer lengths than what he had been before.

Q. 32. And about how frequently was he purchasing supplies from you subsequently to his purchase of the camera?

By Mr. Ward: Objected to as irrelevant and immaterial.

A. Well, I should say I saw him perhaps three times a week, either on matters of calling for finished work or purchasing new material.

Q. 33. That lasted for how long?

A. After the purchase of the camera?

Q. 34. Yes.

A. I should say several months, becoming less frequent as time went on.

Q. 35. You are not connected with the DeForest Phonofilm, are you?

A. Never have been, and am not connected now in any way.

Q. 36. And you are not interested in this controversy one way or the other?

[fol. 82] A. Don't even know what it's about.

By Mr. Ward: All of which shows the irrelevancy of the testimony of the witness.

Direct examination closed.

Cross-examination.

By Mr. Ward:

X Q. 37. As I understand your testimony, prior to the date of the purchase of the camera from your concern by Dr. DeForest, which was in February, 1921, he had brought to your concern or sent to your concern motion picture film having sound records printed thereon?

A. Not printed thereon, but we developed it. He brought undeveloped film. We found sound records after development.

X Q. 38. How did you know they were sound records?

A. Dr. DeForest told me so.

By Mr. Ward: The testimony of this witness on this point is, therefore, objected to as hearsay.

X Q. 39. Now, as I understand it, up to the time that the camera was purchased none of these picture films that you developed contained pictures?

A. No.

X Q. 40. And as I understand you, shortly after the purchase of this motion picture camera from your concern by Dr. DeForest, he brought in motion picture film, upon which, after you developed it, you found picture records and sound records?

A. Yes.

X Q. 41. Are you certain of that?

A. Absolutely.

X Q. 42. Your assistant, Mr. Torma, has just testified in [fol. 83] this case that the motion picture film never had picture records thereon. What have you got to say to that?

By Mr. Darby: I think opposing counsel has unintentionally misstated the testimony of Mr. Torma. The testimony of Mr. Torma, as I recall it, was that he stated that none of the films that he had seen had any pictures on the sound records.

By Mr. Ward: I will accept the amendment to my question if the record shows that.

X Q. 43. Do you still maintain that the motion picture film that you developed for Dr. DeForest after the purchase of the camera had pictures on it?

A. I maintain that. But I want to qualify this by saying that there might have been times that Dr. DeForest, during intervals of time, had tested out his camera without the taking of actual pictures, just recording the sound waves.

X Q. 44. What records, if any, have you got to show that Dr. DeForest sent to you any film with pictures and sound records taken thereon prior to April or May, 1921?

A. Nothing but my memory. A record of that kind never could be used, because no records are kept of what the film contains in the way of picture or sound waves.

X Q. 45. And you are testifying entirely from memory now over a period of about seven years, are you not?

A. I am testifying from memory that the film contained pictures and sound waves; and the record of the camera purchase is an established fact.

[fol. 84] X Q. 46. And I say, testifying entirely from memory after a lapse of seven years, are you prepared to swear that as early as May 1st, 1921, Dr. DeForest brought you picture film having picture records and sound records thereon?

A. I do not testify to any dates, except the fact that the camera purchase is an established date and that right thereafter these records have been brought to me and have been developed.

X Q. 47. Well, if you testify that they were brought to you and developed right thereafter, you are testifying positively that the films were brought to you containing pictures and sound records prior to May 1st, 1921, are you not?

A. It would appear so.

X Q. 48. Well, are you so testifying or not?

A. I am not testifying as to the exact date that this happened. I am relying on the fact, which has been established, that the camera was purchased on a certain date, and that right thereafter this development took place.

X Q. 49. Well, I want you to testify "yes" or "no" to the following question: Did Dr. DeForest bring to you film having picture records and sound records thereon prior to May 1st, 1921?

A. Based on the fact that the camera was purchased prior to the date, I do.

By Mr. Ward: I object to the answer, and ask for a "yes" or "no" answer to my question.

X Q. 50. (X Q. 49 repeated.)

A. I do not wish to take the responsibility of the date of the purchase of the camera, because I have no records in my possession; but if the record can be proven correct, [fol. 85] I certainly do testify to that date.

X Q. 51. I repeat the former question, and ask you to

testify "yes" or "no" as to whether films were brought to you by Dr. DeForest having pictures and sound records thereon prior to May, 1921.

By Mr. Darby: In the effort to meet opposing counsel's insistence on a categorical answer, in view of the witness' last answer, I advise the witness that, for the purpose of answering "yes" or "no" to this question, he can accept the date of acquisition of the camera by Dr. DeForest as of February 18, 1921.

By Mr. Ward: I object to the remarks of counsel, and call the Examiner's attention to the fact that this witness' testimony is worthless to establish the fact interrogated about unless he can testify that the film with the picture and sound records thereon were shown to him prior to May 1st, 1921.

By Mr. Darby: I think we will leave to the proper tribunal the question of the value of this witness' testimony. The witness has made it perfectly apparent from his previous testimony that the film with picture and sound records thereon were developed within a week or ten days after Dr. DeForest acquired the camera. The witness, in his previous answers has repeated the fact that his testimony as to date is based on the date of acquisition of the camera. I, therefore, advise the witness that he is not compelled to answer the question "yes" or "no" without the quali- [fol. 86] fication which he has already stated, namely, that if that was the date that Dr. DeForest acquired the camera, then his answer can follow.

X Q. 52. Do you refuse to answer the question as propounded to you by me?

A. With the qualification of Mr. Darby's explanation as to the date of the purchase of the camera, I answer, yes.

X Q. 53. Then you base the time of this disclosure to you entirely on the fixing of the date of the purchase of the camera; is that correct?

A. Exactly.

X Q. 54. And according to your testimony, when you received this film from Dr. DeForest having the picture records and sound records taken thereon and developed the same, you found that the pictures were very much underexposed and the sound records over-exposed, and you called Dr. DeForest's attention to that fact?

A. He called my attention to the fact; and I verified it.

X Q. 55. You testified on direct examination, if I am not mistaken, that you called it to his attention.

A. We both discussed the matter. It was his film and his work, and therefore he showed me when it was developed and pointed out the deficiency, and I concurred with him in his opinion.

X Q. 56. That was about when?

A. Within a few days of the purchase of the camera.

X Q. 57. And you rely upon the date of purchase of the camera to establish this date?

A. Positively.

X Q. 58. And you say that Dr. DeForest told you that [fol. 87] he intended to overcome this trouble by taking the sound record and picture record on two different films?

A. He told me the best in his opinion would be to have pictures taken on a film and sound records taken on a film and have them printed on a third film, so the sound record would come out in the same density as the picture.

X Q. 59. And you had some other scheme you thought was better?

A. To me at that time it looked going around in a difficult way, and I suggested to him that he could overcome this under-exposure of the picture by using more light.

X Q. 60. And did he try out your scheme?

A. That I couldn't say.

X Q. 61. How did he overcome this difficulty that you found him faced with?

A. That I couldn't say, because he did his own work in his own laboratory until he perfected this phonofilm.

X Q. 62. Well, you have testified you continued to develop film for him some time after the purchase of this camera?

A. But we never carried it far enough to see the perfected film.

X Q. 63. Did the films continue to have this defect as long as you developed them for him?

A. At times it was the reverse.

X Q. 64. And the defect of over-exposure of one and under-exposure of the other continued throughout the time you developed film for him?

A. Yes; correct.

X Q. 65. You have testified that you developed film of this character for him up to what time?

[fol. 88] A. I should say for several months after the purchase of the camera.

X Q. 66. Up to what time? What month would you call "several months"?

A. Two or three months.

X Q. 67. That is, up to April or May?

A. I couldn't say.

X Q. 68. Well, what is your best opinion as to the time when you stopped doing this work for him?

A. Two to three months is the best of my recollection.

X Q. 69. Two months would bring you up to April 18th, and three months would bring you up to May 18th, would it not?

A. I don't want to go on record as definitely establishing the length of that period; it might be as much as six months.

X Q. 70. And it is your testimony that you had less of this work for Dr. DeForest after the purchase of the camera than before?

A. After a period of several months, yes, the amount of work declined.

Cross-examination closed.

Redirect examination.

By Mr. Darby:

R. D. Q. 71. How long have you been in the motion picture business?

A. Twelve years.

Redirect examination closed.
No recross-examination.
Deposition closed.

Signature of the witness waived by consent of counsel.

[fol. 89]

Stipulation

It is hereby stipulated by and between counsel for the respective parties that exhibits offered in evidence by either party may be retained in the custody of offering counsel until the hearing, subject to inspection by opposing counsel upon reasonable notice.

Stipulation

It is stipulated and agreed that if Samuel E. Darby, Jr., were called as a witness in this case, he would testify that he received the data on which the application of DeForest involved in this interference was based at least as early as June 30, 1921, as shown in the papers which are here offered in evidence on behalf of DeForest as "DeForest Exhibit No. 4."

(Papers referred to are marked in evidence as "DeForest Exhibit No. 4.")

It is further stipulated and agreed that, inasmuch as DeForest's testimony was taken subsequent to the time allowed for DeForest to complete his testimony to meet mutual convenience of counsel the testimony-in-chief of DeForest, which is now closed, with the consent of the Honorable —— ——, Commissioner of Patents, is accepted nunc pro tunc.

Testimony-in-chief of DeForest closed.

Notarial certificate waived by consent of counsel.
Feb. 24, 1928.

(Signed) Augusta P. Boos. (Seal.) Notary Public, Queens Co. No. 2011. Certificate filed New York Co. No. 1109. New York County Register's No. —. Commission expires March 30, 1929.

E. L. GREENSFELDER.

METHOD AND APPARATUS FOR SYNCHRONOUSLY PRODUCING SOUNDS TO ACCOMPANY MOTION PICTURES.

APPLICATION FILED MAR. 30, 1916.

1,254,684.

Patented Jan. 29, 1918.

4 SHEETS—SHEET 1.

Fig. 1.

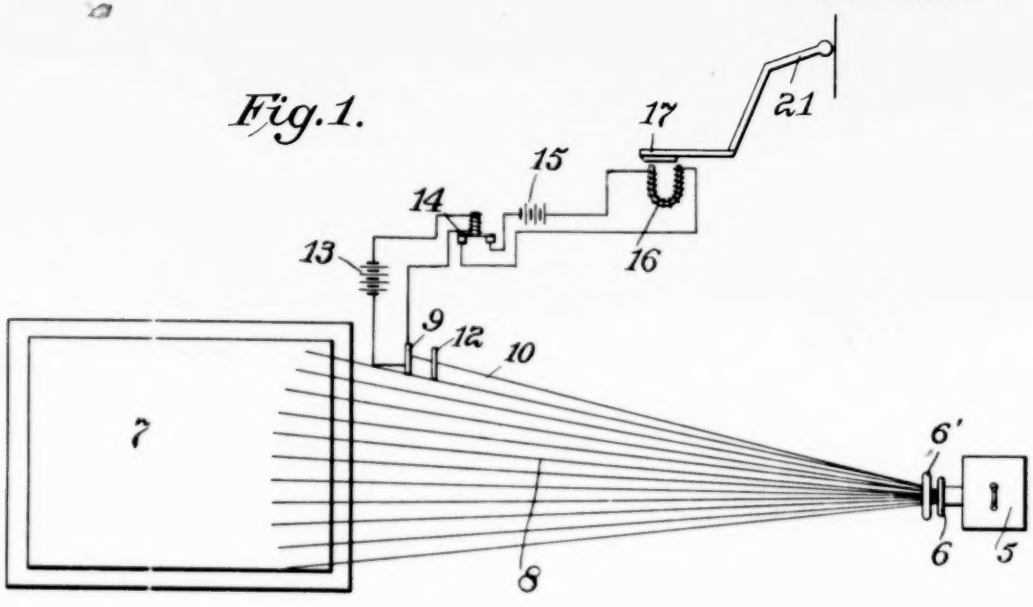

Fig. 2.

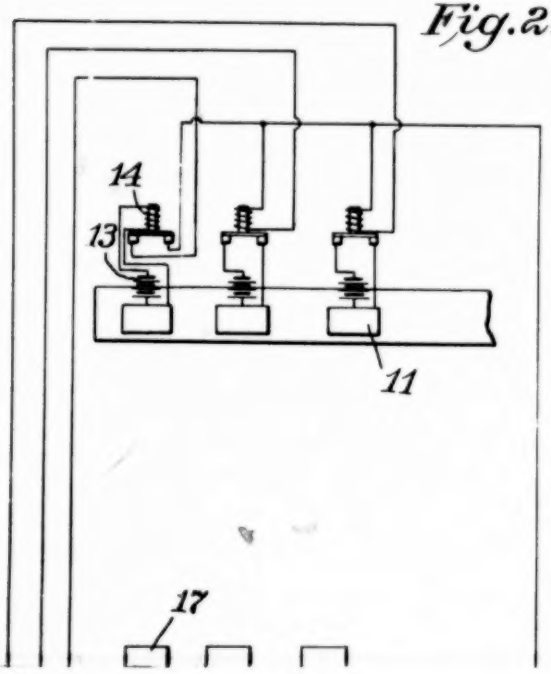

Fig. 3.

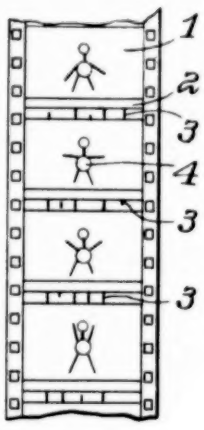

Fig.1.

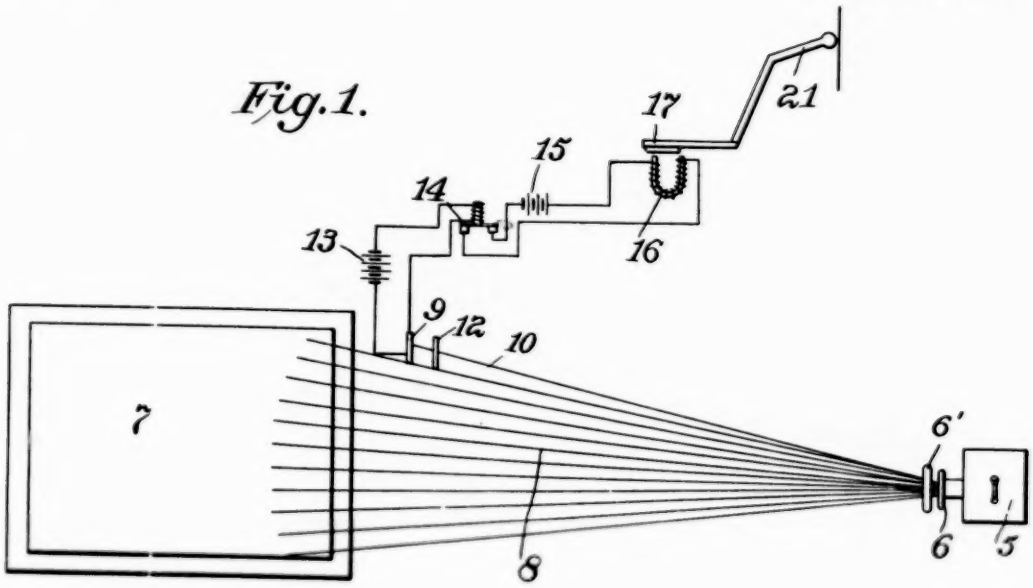

Fig.2.

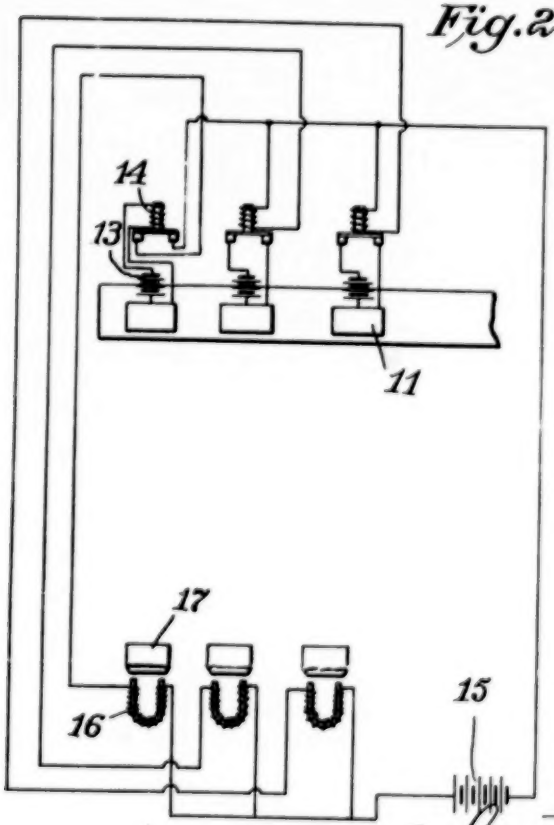

Fig.3.

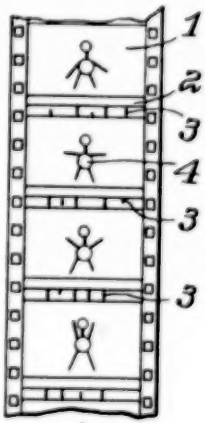

Inventor:
Elmer L. Greensfelder,
by Spear, Middleton, Donaldson & Spear
Atty's.

E. L. GREENSFELDER.

METHOD AND APPARATUS FOR SYNCHRONOUSLY PRODUCING SOUNDS TO ACCOMPANY MOTION PICTURES.

APPLICATION FILED MAR. 30, 1916.

1,254,684

Patented Jan. 29, 1918.

4 SHEETS—SHEET 2.

Fig. 4.

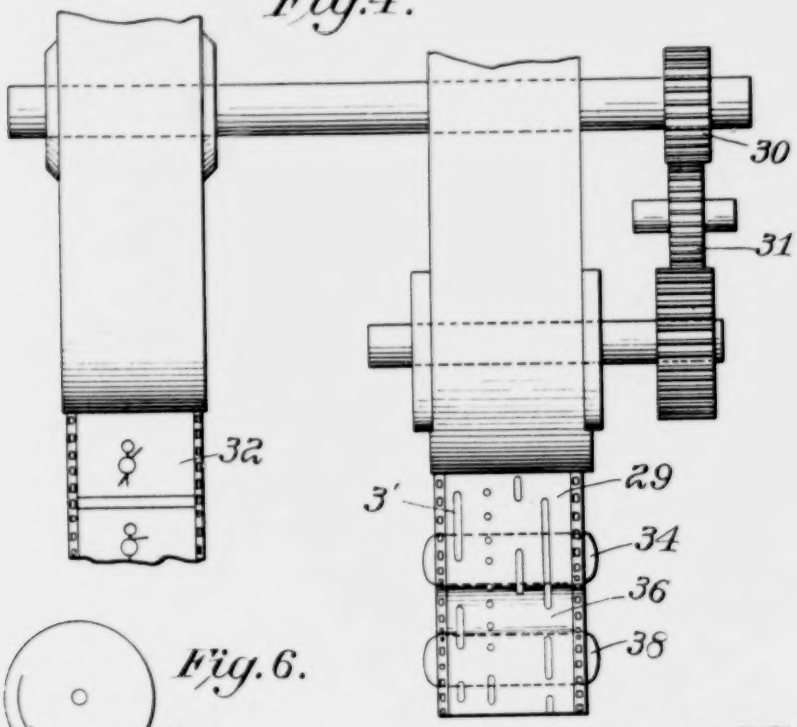

Fig. 6.

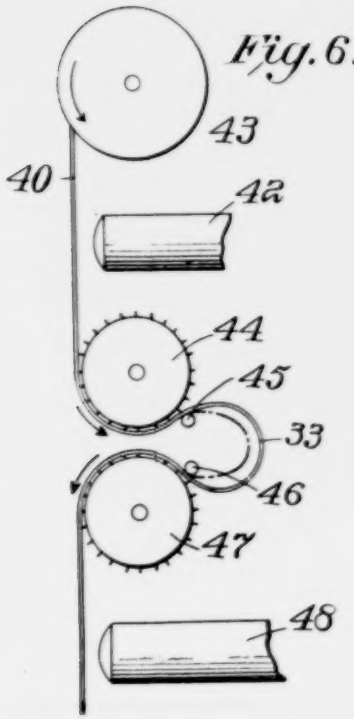

Fig. 5.

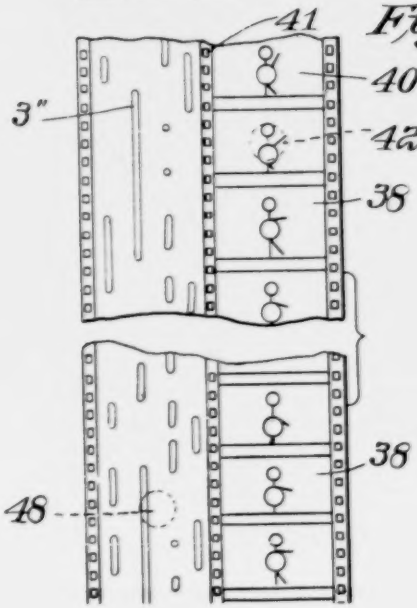

1,254,684. APPLICATION FILED MAR. 30, 1916. Patented Jan. 29, 1918.

4 SHEETS—SHEET 2.

Fig. 4.

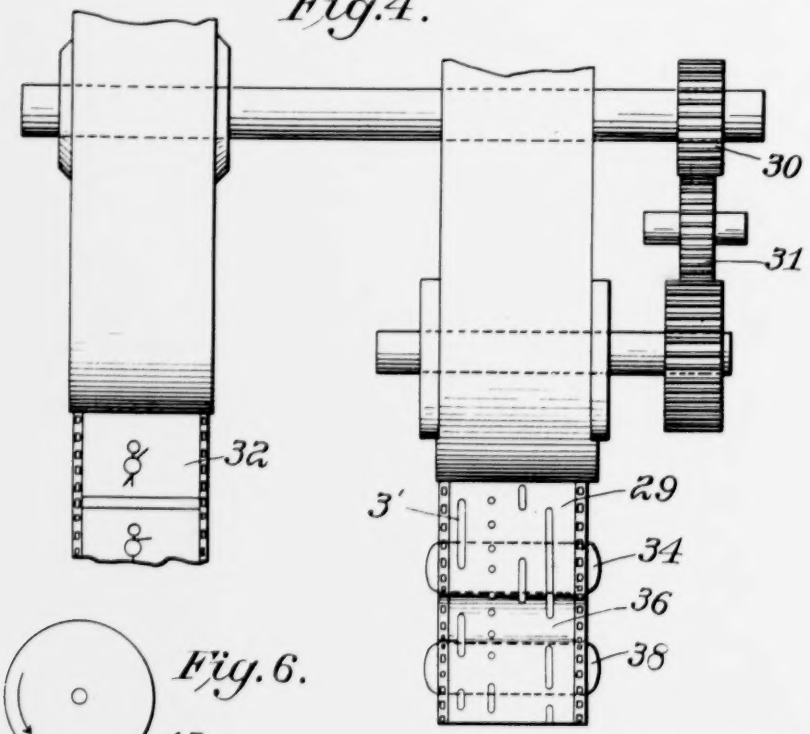

Fig. 6.

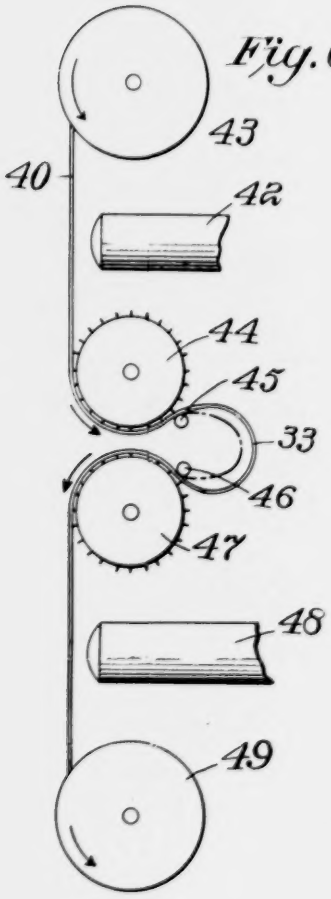

Fig. 5.

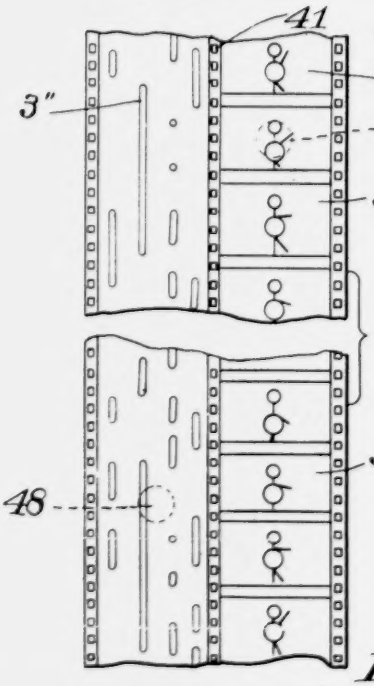

Inventor:

Elmer L. Greensfelder:

by Spear, Middleton, Donaldson & Spear

Atty's.

E. L. GREENSFELDER.

METHOD AND APPARATUS FOR SYNCHRONOUSLY PRODUCING SOUNDS TO ACCOMPANY MOTION PICTURES.

APPLICATION FILED MAR. 30, 1916.

1,254,684.

Patented Jan. 29, 1918.

4 SHEETS—SHEET 3.

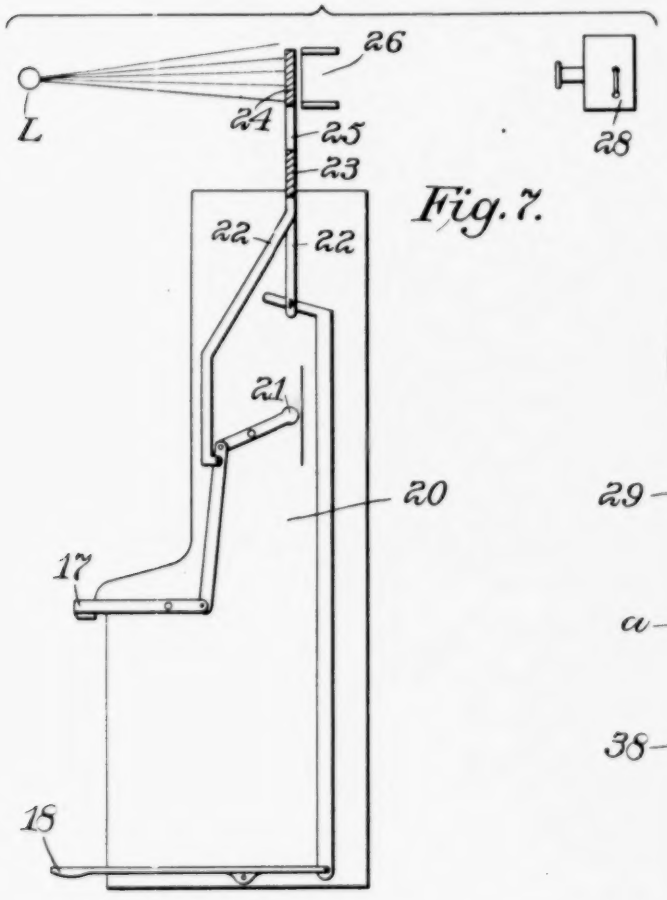

Fig. 7.

Fig. 9.

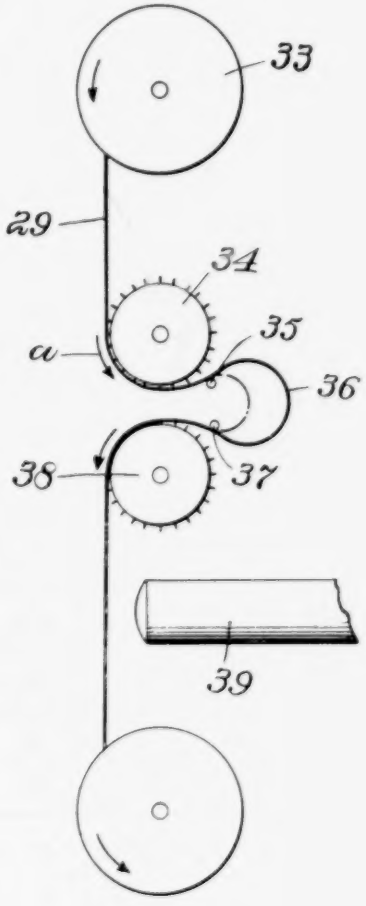

Fig. 8.

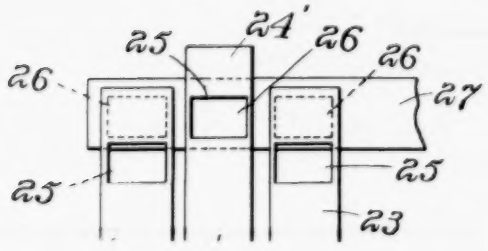

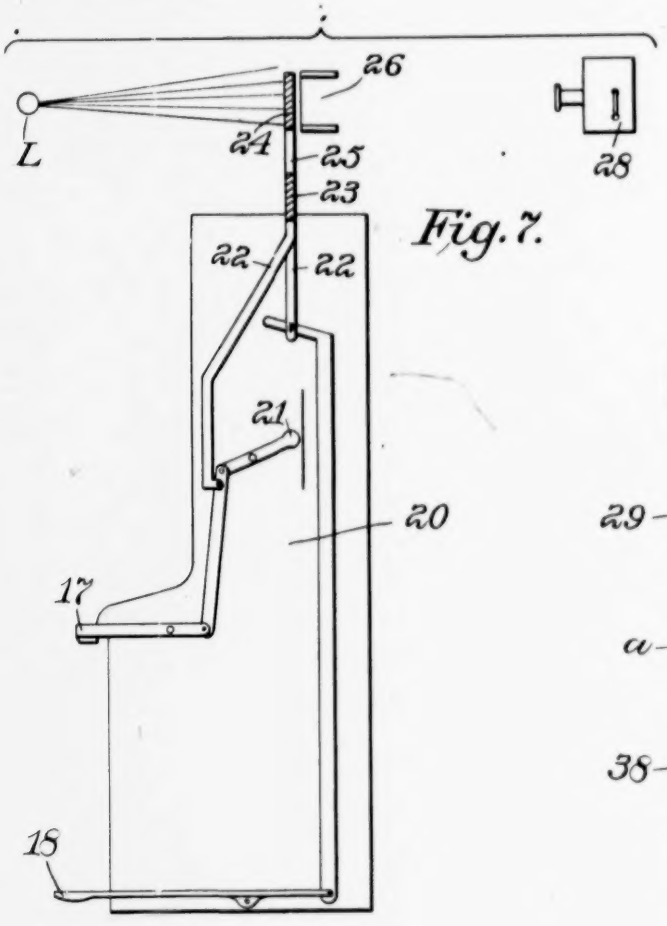

Fig. 7.

Fig. 9.

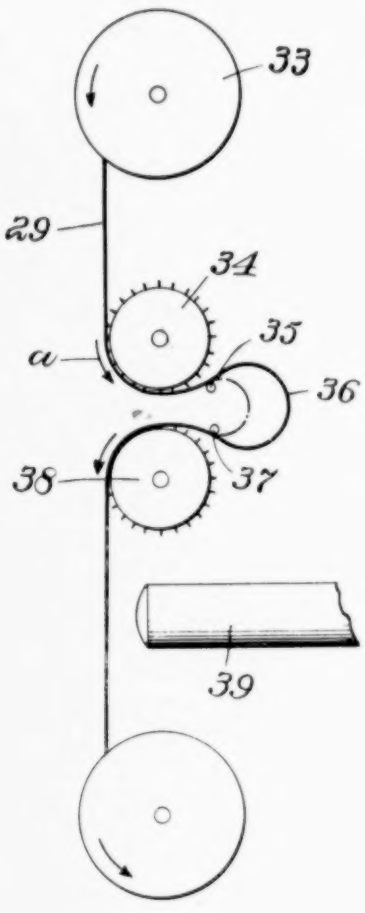

Fig. 8.

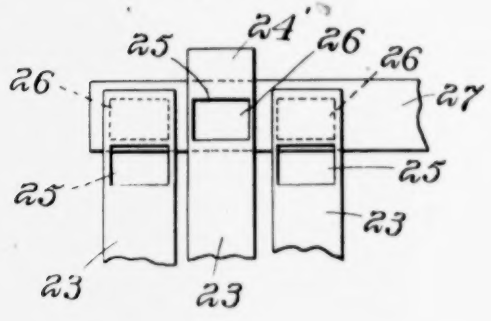

Inventor:
Elmer L. Greensfelder,
by Spear, Middleton, Donaldson & Spear
Atty's.

E. L. GREENSFELDER.

METHOD AND APPARATUS FOR SYNCHRONOUSLY PRODUCING SOUNDS TO ACCOMPANY MOTION PICTURES.

APPLICATION FILED MAR. 30, 1916.

1,254,684.

Patented Jan. 29, 1918.

4 SHEETS—SHEET 4.

Fig. 10.

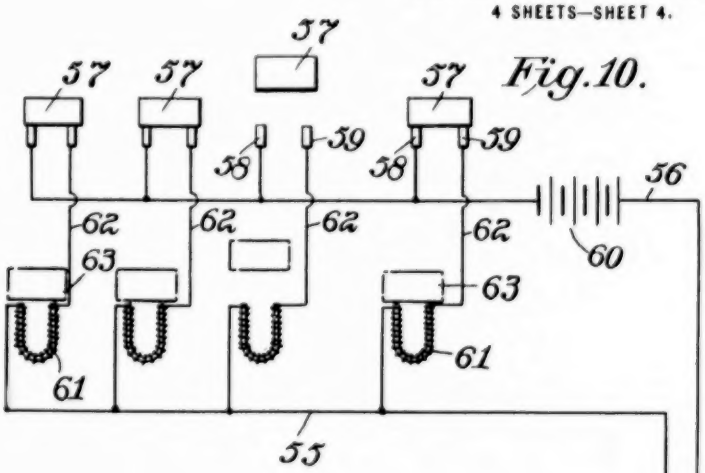

Fig. 11.

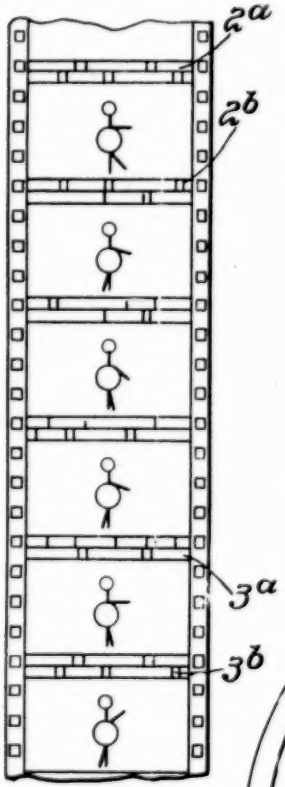

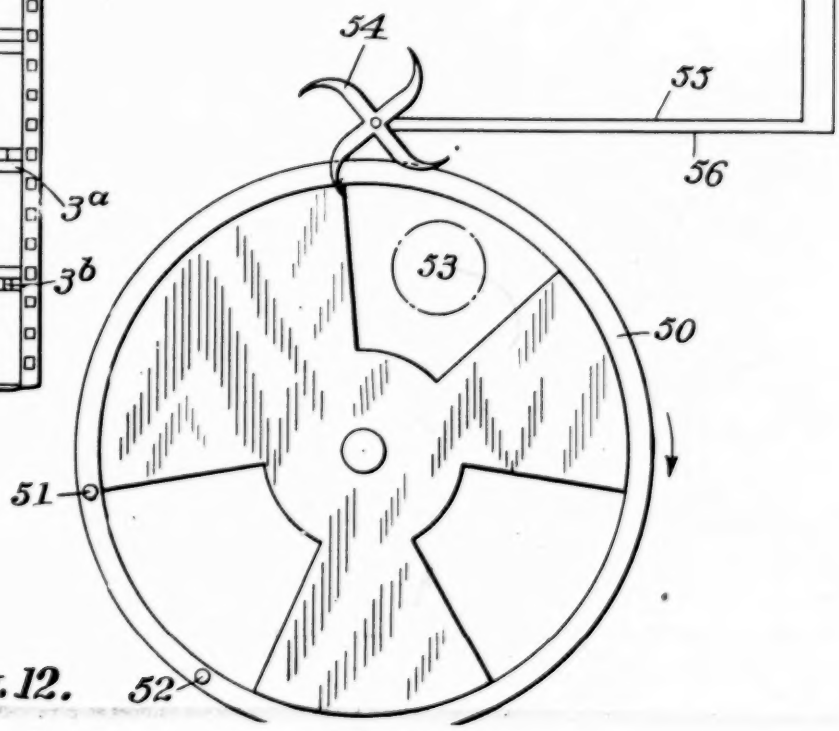

Fig. 12.

UNITED STAT

ELMER LEWIS GREENS

METHOD AND APPARATUS FOR SYN
M

1,254,684. Specifi

Application filed

To all whom it may concern:

Be it known that I, ELMER L. G
FELDER, a citizen of the United Stat
residing at Baltimore, Maryland, h
vented certain new and useful Improv
in Methods and Apparatus for Sy
nously Producing Sounds to Acco
Motion-Pictures, of which the follow
a specification.

The present invention relates to
proved method of producing different
during the projection of motion p
upon the object screen. As is custom
present, while the pictures are being
upon the screen, the orchestra plays
priate musical selections. In order
duce a more realistic effect the m
generally chosen and conducted so as
added expression to the actions and d
tive scenes being reproduced in pan
on the screen. Unusual sounds, such
report of a gun, the shriek of a whis
clatter of horses' feet, the cry of a ch
ringing of a bell, etc., all of whi
greatly to the vividness of the sce
generally assigned to one of the me
orchestra to be reproduced as nearly
chronism with the corresponding ac
the picture as possible.

The object of the present invention
provide an improved method whereb
various supplemental sounds, or ev
piano accompaniment will be produ
the various instruments in exact synch
with the reproduction on the picture
of the scene of which they are illustr

The invention consists in providing
tem of control for these several instr
which will be automatically operated
picture film itself. It consists, more
cally, in photographing on the film
of lines, or marks, disposed parallel
length of the film, and suitably po
in relation to the individual

IDS TO ACCOMPANY MOTION PICTURES.

Patented Jan. 29, 1918.

4 SHEETS—SHEET 4.

Fig. 10.

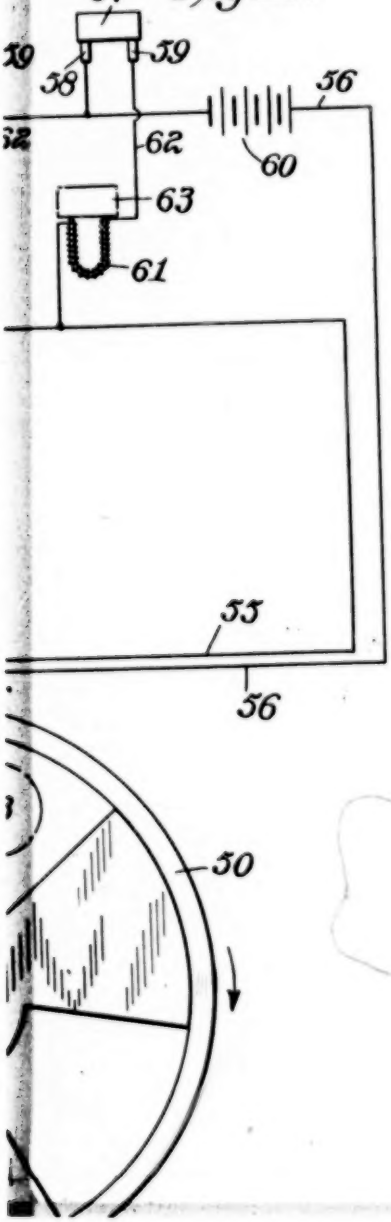

UNITED STATES PATENT OFFICE.

ELMER LEWIS GREENSFELDER, OF BALTIMORE, MARYLAND.

METHOD AND APPARATUS FOR SYNCHRONOUSLY PRODUCING SOUNDS TO ACCOMPANY MOTION-PICTURES.

1,254,684. Specification of Letters Patent. Patented Jan. 29, 1918.

Application filed March 30, 1916. Serial No. 87,788.

To all whom it may concern:

Be it known that I, ELMER L. GREENSFELDER, a citizen of the United States, and residing at Baltimore, Maryland, have invented certain new and useful Improvements in Methods and Apparatus for Synchronously Producing Sounds to Accompany Motion-Pictures, of which the following is a specification.

The present invention relates to an improved method of producing different sounds during the projection of motion pictures upon the object screen. As is customary at present, while the pictures are being shown upon the screen, the orchestra plays appropriate musical selections. In order to produce a more realistic effect the music is generally chosen and conducted so as to give added expression to the actions and descriptive scenes being reproduced in pantomime on the screen. Unusual sounds, such as the report of a gun, the shriek of a whistle, the clatter of horses' feet, the cry of a child, the ringing of a bell, etc., all of which add greatly to the vividness of the scene, are generally assigned to one of the men in the orchestra to be reproduced as nearly in synchronism with the corresponding action in the picture as possible.

The object of the present invention is to provide an improved method whereby these various supplemental sounds, or even the piano accompaniment will be produced by the various instruments in exact synchronism with the reproduction on the picture screen of the scene of which they are illustrative.

The invention consists in providing a system of control for these several instruments which will be automatically operated by the picture film itself. It consists, more specifically, in photographing on the film a series of lines, or marks, disposed parallel to the length of the film and suitably positioned ing a whistle, or producing like noises. The light from the motion picture machine passes through these transparent "sound marks" as the film is being shown on the screen. These light rays are intercepted between the lens of the machine and the screen, or at the screen, and caused to fall upon a series of exposed, separate, selenium cells. An individual selenium cell is provided for each "sound mark" of the film and each ray of light is directed by a system of slots and guides to exactly register with its corresponding cell. These cells are in turn each connected with a separate relay, electric battery and electro-magnet, the latter being so placed as to mechanically operate the sound instrumentality upon its becoming energized.

The invention further contemplates the provision of a method by which the musical instruments may be controlled and instrumental selections rendered separately and independently of the pictures, as for example, during the intermission of performances, or at any desired time or place.

The invention includes among other objects suitable arrangements and connections, whereby the sound producing instruments may be located near the screen or at a point sufficiently remote from the motion picture machine to produce the desired effects upon the audience.

The invention, while embodying in all of its forms the main principles of operation above set forth, may be varied somewhat to adapt itself to different kinds of machines. For example as previously pointed out, the "sound marks" may be placed on the picture film and be operated by the intermittent feed of the machine. Besides this method the "sound marks" might be formed on a separate reel of film adapted to have a continuous motion and geared to the sprocket turn-

1,254,684. APPLICATION FILED MAR. 30, 1916. Patented Jan. 29, 1918.
4 SHEETS—SHEET 4.

Fig. 10.

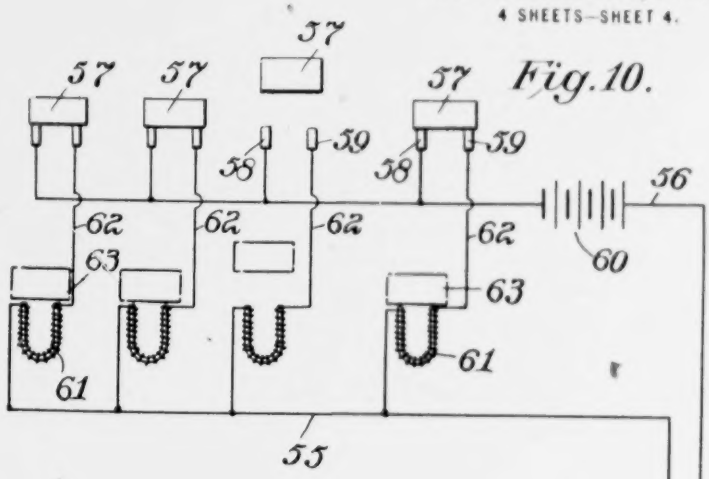

Fig. 11.

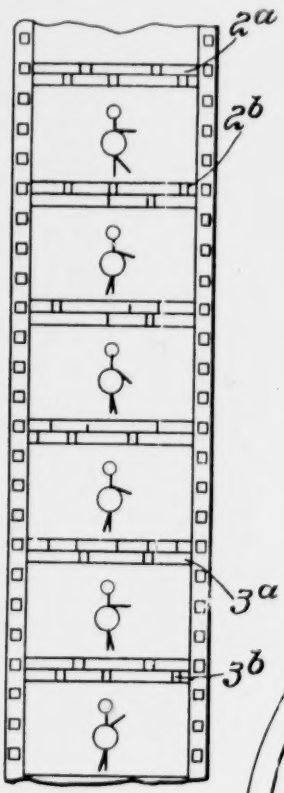

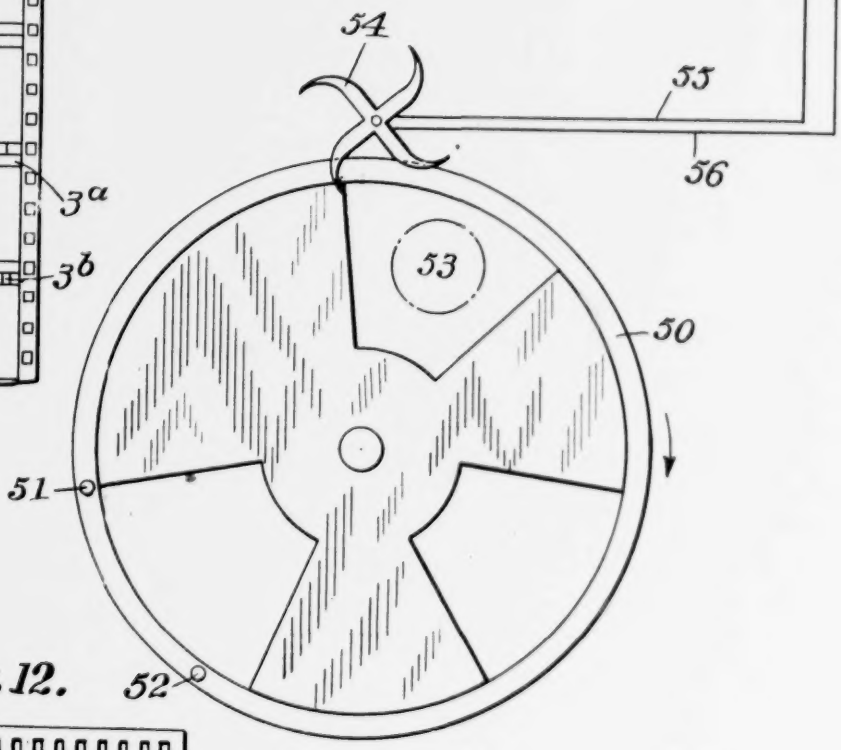

Fig. 12.

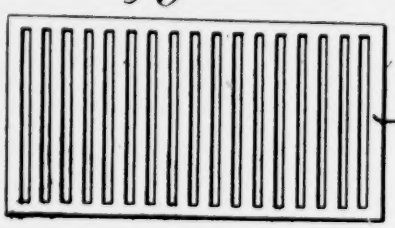

Inventor:
Elmer L. Greensfelder,
by Spear Middleton, Donald & Spear
Atty's.

1,254,684. Specifi

Application filed

To all whom it may concern:

Be it known that I. ELMER L. G FELDER, a citizen of the United State residing at Baltimore, Maryland, ha vented certain new and useful Improve in Methods and Apparatus for Sy nously Producing Sounds to Accom Motion-Pictures, of which the follow a specification.

The present invention relates to a proved method of producing different so during the projection of motion pic upon the object screen. As is custom present, while the pictures are being a upon the screen, the orchestra plays a priate musical selections. In order to duce a more realistic effect the mu generally chosen and conducted so as to added expression to the actions and de tive scenes being reproduced in panto on the screen. Unusual sounds, such a report of a gun, the shriek of a whist clatter of horses' feet, the cry of a child ringing of a bell, etc., all of which greatly to the vividness of the scene generally assigned to one of the men i orchestra to be reproduced as nearly in chronism with the corresponding acti the picture as possible.

The object of the present invention provide an improved method whereby various supplemental sounds, or even piano accompaniment will be produce the various instruments in exact synchr with the reproduction on the picture of the scene of which they are illustra

The invention consists in providing tem of control for these several instru which will be automatically operated b picture film itself. It consists, more cally, in photographing on the film a of lines, or marks, disposed parallel length of the film, and suitably posi in relation to the individual pi of the scene being reproduced, company the action or description wi is desired to have emphasized by the sponding sound. These lines or mar made transparent, white, or translucen darkened background. The lines may represent one note of a piano (in the a piano record), while others may re an expression lever, a sustaining pe the operating mechanisms, or instrume ties for beating a drum, ringing a bell

Fig. 10.

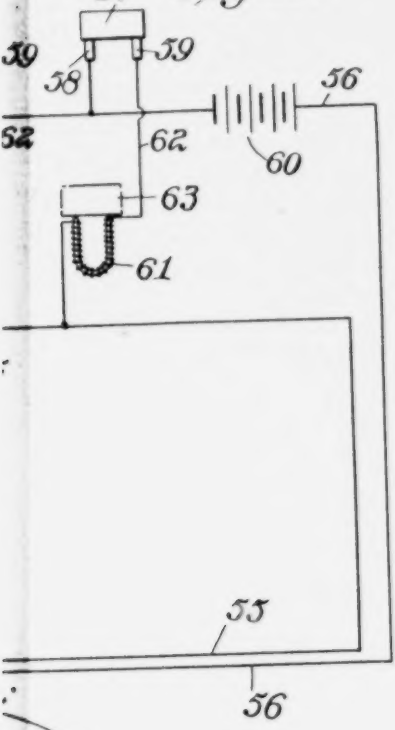

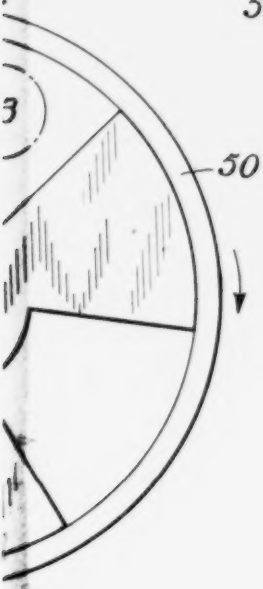

Inventor:

mer L. Greensfelder,

Reynolds & Spear

Atty's

Application filed March 30, 1916. Serial No. 87,788.

To all whom it may concern:

Be it known that I, ELMER L. GREENSFELDER, a citizen of the United States, and residing at Baltimore, Maryland, have invented certain new and useful Improvements in Methods and Apparatus for Synchronously Producing Sounds to Accompany Motion-Pictures, of which the following is a specification.

The present invention relates to an improved method of producing different sounds during the projection of motion pictures upon the object screen. As is customary at present, while the pictures are being shown upon the screen, the orchestra plays appropriate musical selections. In order to produce a more realistic effect the music is generally chosen and conducted so as to give added expression to the actions and descriptive scenes being reproduced in pantomime on the screen. Unusual sounds, such as the report of a gun, the shriek of a whistle, the clatter of horses' feet, the cry of a child, the ringing of a bell, etc., all of which add greatly to the vividness of the scene, are generally assigned to one of the men in the orchestra to be reproduced as nearly in synchronism with the corresponding action in the picture as possible.

The object of the present invention is to provide an improved method whereby these various supplemental sounds, or even the piano accompaniment will be produced by the various instruments in exact synchronism with the reproduction on the picture screen of the scene of which they are illustrative.

The invention consists in providing a system of control for these several instruments which will be automatically operated by the picture film itself. It consists, more specifically, in photographing on the film a series of lines, or marks, disposed parallel to the length of the film, and suitably positioned in relation to the individual pictures of the scene being reproduced, to accompany the action or description which it is desired to have emphasized by the corresponding sound. These lines or marks are made transparent, white, or translucent on a darkened background. The lines may each represent one note of a piano (in the case of a piano record), while others may represent an expression lever, a sustaining pedal, or the operating mechanisms, or instrumentalities for beating a drum, ringing a bell, blowing a whistle, or producing like noises. The light from the motion picture machine passes through these transparent "sound marks" as the film is being shown on the screen. These light rays are intercepted between the lens of the machine and the screen, or at the screen, and caused to fall upon a series of exposed, separate, selenium cells. An individual selenium cell is provided for each "sound mark" of the film and each ray of light is directed by a system of slots and guides to exactly register with its corresponding cell. These cells are in turn each connected with a separate relay, electric battery and electro-magnet, the latter being so placed as to mechanically operate the sound instrumentality upon its becoming energized.

The invention further contemplates the provision of a method by which the musical instruments may be controlled and instrumental selections rendered separately and independently of the pictures, as for example, during the intermission of performances, or at any desired time or place.

The invention includes among other objects suitable arrangements and connections, whereby the sound producing instruments may be located near the screen or at a point sufficiently remote from the motion picture machine to produce the desired effects upon the audience.

The invention, while embodying in all of its forms the main principles of operation above set forth, may be varied somewhat to adapt itself to different kinds of machines. For example as previously pointed out, the "sound marks" may be placed on the picture film and be operated by the intermittent feed of the machine. Besides this method the "sound marks" might be formed on a separate reel of film adapted to have a continuous motion and geared to the sprocket turning the picture reel. Again a continuous method of projecting the "sound marks" may be employed in which a widened reel is used, on one side of which are the "sound marks", while the pictures occupy the remaining space.

With these and other objects in view the invention consists in the combination and arrangement of parts more fully described in the following specification, illustrated in the accompanying drawings and pointed out in the appended claims.

In the drawings the various methods by which the invention may be put into practice are illustrated diagrammatically by a series of views suggesting the arrangement and use of the several forms of apparatus employed.

In the drawings:—

Figure 1 is a diagrammatic view illustrating one embodiment of the present invention.

Fig. 2 is a diagram showing the electrical connections for the same more in detail.

Fig. 3 is a portion of a film of usual type having one arrangement of "sound marks" photographed thereon.

Fig. 4 illustrates diagrammatically a modified arrangement involving the use of two separate films driven synchronously.

Fig. 5 is a diagrammatic plan view illustrating a further modified arrangement involving the use of a double width film.

Fig. 6 illustrates the arrangement of Fig. 5, shown in side elevation.

Figs. 7 and 8 illustrate diagrammatically in side and front elevational views respectively the apparatus used in recording the "sound marks" on a film.

Fig. 9 illustrates diagrammatically take-up mechanism used to move the film at a constant speed before the projecting apparatus.

Fig. 10 illustrates diagrammatically an arrangement for sustaining the connecting of the electric circuits until the next consecutive row of "sound marks" is before the projecting lens.

Fig. 11 is a modified form of film.

Fig. 12 illustrates the screen 12.

The invention will first be described in connection with the method illustrated by the diagrammatic views, Figs. 1, 2 and 3, in which a series of "sound marks" are recorded on a small section of the ordinary picture film. Fig. 3 shows a fragmental strip 1 of an ordinary motion picture film, having the usual transverse sections 2 on which there is no photograph or marking. In addition this view shows horizontal rows of "sound marks" 3, located immediately above the picture 4 and below the section or blank strip 2. It is obvious that the "sound marks" 3 could be located equally well below the picture rather than above. These "sound marks" consist of a series of transthis specification. Fig. 1 illustrates diagrammatically the relative position and arrangement of all the instrumentalities employed in the use of an ordinary film carrying the "sound marks" 3 thereon at intervals between the pictures. The projecting motion picture machine 5, with its lens 6 and shutter 6′ is suitably located so as to project the pictures on the object screen 7, 8 representing the cone of light rays passing from the lens to the screen. A shelf 9 is placed at a suitable point between the lens 6 and screen 7, or at the screen 7, so as to intercept the rays of light 10 coming from the film through the "sound marks" 3. The shelf 9 contains a plurality of selenium cells or plates 11 arranged in a horizontal row corresponding in number and arrangement to the "sound marks" 3 on the film. A slotted screen or grating 12 may be properly positioned in front of the shelf 9 for the purpose of reducing the magnified light rays coming from the "sound marks" and preventing overlapping of the rays on the selenium surfaces. Each particular "sound mark" 3 on the film has a corresponding selenium cell 11 on the shelf 9, upon which it is adapted to impinge a ray of light as it passes between the light source and the lens of the projecting machine. When, for example, it is desired to apply the invention for the purpose of operating a player piano, eighty-eight "sound marks" 3 are provided, one for each note of the piano and additional "sound marks" for expression levers. The number and arrangement of these "sound marks" can be varied at will according to the number and variety of sound instruments it is desired to operate.

As previously pointed out, the rays of light 10 being dispersed and directed through the "sound marks" 3 and then reduced by the slits of the grating 12, are directed upon the corresponding selenium cells 11. These latter are each connected with a battery 13 in series with a corresponding relay 14, which in turn are connected through a second battery 15, each to a corresponding electro-magnet 16 adapted to operate a control lever 17 of a piano key, expression pedal, drum stick or other sound producing instrument. It is well known that selenium, when exposed to a concentrated ray of light, changes its conductivity with

batteries, one for each relay. Again either battery 15 or batteries 13 could be replaced by a source of current, such as the house current, connected through a transformer.

The position of the shelf 9, containing the selenium cells 11, can be placed at any arbitrary point in the path of the light rays coming through the "sound marks" 3, either at or near the screen 7, or at a point about midway between the screen and the lens (as shown in Fig. 1), or near the operator's room. In order to effect the different locations of the shelf 9, a mirror may be placed in the path of the projected light rays so as to reflect them at any desired angle. A special lens may be placed near the projecting camera, through which the light rays are passed and dispersed so as to allow the shelf 9 to be placed within a comparatively short distance of the projecting lens of the motion picture machine.

Instead of using a separate selenium cell for each "sound mark" as proposed, a single structure may be used with an exposed selenium surface which is divided lengthwise electrically into as many sections as there are sounds and expressions to be operated by tapping off at regular intervals and connecting separately with the sources of current, relays, electro-magnets and corresponding sound instruments and expression levers to be operated. A shelf of thin partitions placed before the subdivided selenium surface would prevent the interference of the light ray coming from a "sound mark" with any selenium surface subdivision except its corresponding one.

The method of photographing the "sound marks" 3, as used in the method illustrated in Figs. 1 to 3, will next be described in detail and reference is made to Figs. 7 and 8 of the drawing. The rows of "sound marks" are photographed onto the picture film by a motion picture camera, the film of which is moved intermittently as is done in photographing an ordinary motion picture scene. It is absolutely necessary that the film be moved, while the "sound marks" are being photographed, at exactly the same speed at which the picture film, of which they are to control the accompanying sounds and music, is moved. By way of illustration, Figs. 7 and 8 show the manner of photographing the "sound marks" to record the notes of music played upon a piano. Each key 17 or extension thereof is provided with a rod 22 which is normally held in its raised position by a spring 23 and is adapted to be depressed by the hammer 21 when the key is struck. The rod 22 is provided with a plate 23 which is normally held in its raised position by the spring 23 and is adapted to be depressed by the hammer 21 when the key is struck. The plate 23 is provided with an opening 25 which is normally held in its raised position with the shutter 24 intercepting the rays of light from any suitable source L and preventing them from registering with an aperture 26 formed in a horizontal shelf 27. A motion picture camera 28 is suitably positioned behind the shelf 27 in line with the series of apertures 26. As the key or pedal of the piano operates the hammer 21, the rod 22 and plate 23 are moved so as to bring the opening 25 opposite the aperture 26 and allow the light from the source L to pass therethrough and be photographed by the motion picture camera 28. The film of the camera 28 must be moved at the same speed for the purpose of photographing the "sound marks" 3, as when the camera is used for the purpose of photographing the corresponding scene to be reproduced. While the "sound marks" 3 are being made by photographing the light intermittently passing through the aperture 26, the picture part of the film in camera 28 is screened by a blind or shutter so as to remain unexposed. In this manner the "sound marks" 3 are photographed only on the narrow strip of the film shown in Fig. 3.

In order to secure the best results it has been found advisable to have a motion picture positive properly pieced and joined so as to be ready for projecting and exhibiting before recording on the film in camera 28 the rows of "sound marks" that are to accompany the animated picture. This positive should contain on it blank spaces in the position of 3, Fig. 1. On the completed positive ready for the market these blank spaces will be filled in by rows of sound marks, and the spaces for the pictures by the pictures, which can be effected by such a method as printing the positive from the two superimposed negatives, as will be hereinafter described. The pianist or musician, who is to play the accompaniment to be recorded for the picture, watches the positive picture as it is projected on the screen before him from a motion picture apparatus at a definite speed. After he has become familiar with the picture, the positive is again projected through the motion picture apparatus and he then plays the accompaniment to the picture, introducing whatever melodies, chords, compositions or sound effects he thinks appropriate to the action of the objects or characters in the picture. The instrument which he operates is [illegible]

In the drawings:—

Figure 1 is a diagrammatic view illustrating one embodiment of the present invention.

Fig. 2 is a diagram showing the electrical connections for the same more in detail.

Fig. 3 is a portion of a film of usual type having one arrangement of "sound marks" photographed thereon.

Fig. 4 illustrates diagrammatically a modified arrangement involving the use of two separate films driven synchronously.

Fig. 5 is a diagrammatic plan view illustrating a further modified arrangement involving the use of a double width film.

Fig. 6 illustrates the arrangement of Fig. 5, shown in side elevation.

Figs. 7 and 8 illustrate diagrammatically in side and front elevational views respectively the apparatus used in recording the "sound marks" on a film.

Fig. 9 illustrates diagrammatically take-up mechanism used to move the film at a constant speed before the projecting apparatus.

Fig. 10 illustrates diagrammatically an arrangement for sustaining the connecting of the electric circuits until the next consecutive row of "sound marks" is before the projecting lens.

Fig. 11 is a modified form of film.

Fig. 12 illustrates the screen 12.

The invention will first be described in connection with the method illustrated by the diagrammatic views, Figs. 1, 2 and 3, in which a series of "sound marks" are recorded on a small section of the ordinary picture film. Fig. 3 shows a fragmental strip 1 of an ordinary motion picture film, having the usual transverse sections 2 on which there is no photograph or marking. In addition this view shows horizontal rows of "sound marks" 3, located immediately above the picture 4 and below the section or blank strip 2. It is obvious that the "sound marks" 3 could be located equally well below the picture rather than above. These "sound marks" consist of a series of translucent, transparent or white spaces, photographed on a darkened surface in the form of parallel lines extending in a direction parallel to the length of the film. The purpose of these "sound marks" is to permit rays of light from the lens of the projecting machine to pass through when the picture film is being projected upon a screen. The manner in which these lines or "sound marks" are photographed on the film will be described in detail in another part of

motion picture machine 5, with its lens 6 and shutter 6′ is suitably located so as to project the pictures on the object screen 7, 8 representing the cone of light rays passing from the lens to the screen. A shelf 9 is placed at a suitable point between the lens 6 and screen 7, or at the screen 7, so as to intercept the rays of light 10 coming from the film through the "sound marks" 3. The shelf 9 contains a plurality of selenium cells or plates 11 arranged in a horizontal row corresponding in number and arrangement to the "sound marks" 3 on the film. A slotted screen or grating 12 may be properly positioned in front of the shelf 9 for the purpose of reducing the magnified light rays coming from the "sound marks" and preventing overlapping of the rays on the selenium surfaces. Each particular "sound mark" 3 on the film has a corresponding selenium cell 11 on the shelf 9, upon which it is adapted to impinge a ray of light as it passes between the light source and the lens of the projecting machine. When, for example, it is desired to apply the invention for the purpose of operating a player piano, eighty-eight "sound marks" 3 are provided, one for each note of the piano and additional "sound marks" for expression levers. The number and arrangement of these "sound marks" can be varied at will according to the number and variety of sound instruments it is desired to operate.

As previously pointed out, the rays of light 10 being dispersed and directed through the "sound marks" 3 and then reduced by the slits of the grating 12, are directed upon the corresponding selenium cells 11. These latter are each connected with a battery 13 in series with a corresponding relay 14, which in turn are connected through a second battery 15, each to a corresponding electro-magnet 16 adapted to operate a control lever 17 of a piano key, expression pedal, drum stick or other sound producing instrument. It is well known that selenium, when exposed to a concentrated ray of light, changes its conductivity with a resultant lowering of its electrical resistivity. This electro-physical change is relied on for the purpose of closing the electric circuit, including battery 15 and the energization of the corresponding electro-magnet.

The exact system of electrical connections may be varied by providing, for instance, a single battery instead of the individual ones 13 to operate any of the selenium cells 11 on which the light might fall, or again battery 15 could be replaced by a number of small

trary point in the path of the light rays coming through the "sound marks" 3, either at or near the screen 7, or at a point about midway between the screen and the lens (as shown in Fig. 1), or near the operator's room. In order to effect the different locations of the shelf 9, a mirror may be placed in the path of the projected light rays so as to reflect them at any desired angle. A special lens may be placed near the projecting camera, through which the light rays are passed and dispersed so as to allow the shelf 9 to be placed within a comparatively short distance of the projecting lens of the motion picture machine.

Instead of using a separate selenium cell for each "sound mark" as proposed, a single structure may be used with an exposed selenium surface which is divided lengthwise electrically into as many sections as there are sounds and expressions to be operated by tapping off at regular intervals and connecting separately with the sources of current, relays, electro-magnets and corresponding sound instruments and expression levers to be operated. A shelf of thin partitions placed before the subdivided selenium surface would prevent the interference of the light ray coming from a "sound mark" with any selenium surface subdivision except its corresponding one.

The method of photographing the "sound marks" 3, as used in the method illustrated in Figs. 1 to 3, will next be described in detail and reference is made to Figs. 7 and 8 of the drawing. The rows of "sound marks" are photographed onto the picture film by a motion picture camera, the film of which is moved intermittently as is done in photographing an ordinary motion picture scene. It is absolutely necessary that the film be moved, while the "sound marks" are being photographed, at exactly the same speed at which the picture film, of which they are to control the accompanying sounds and music, is moved. By way of illustration, Figs. 7 and 8 show the manner of photographing the "sound marks" to record the notes of music played upon a piano. Each key 17 or expression pedal 18 of a piano 20, or other instrument the sound of which is to be recorded, operates a hammer 21, or corresponding part of another instrument, and at the same time moves a rod 22, which in this case is moved vertically. At the upper end of the rod 22 a plate 23 is carried, provided with blind or shuter part 24 and a corresponding opening 25 located immediately below the same. The plate 23 is adapted to normally

26. As the key or pedal of the piano operates the hammer 21, the rod 22 and plate 23 are moved so as to bring the opening 25 opposite the aperture 26 and allow the light from the source L to pass therethrough and be photographed by the motion picture camera 28. The film of the camera 28 must be moved at the same speed for the purpose of photographing the "sound marks" 3, as when the camera is used for the purpose of photographing the corresponding scene to be reproduced. While the "sound marks" 3 are being made by photographing the light intermittently passing through the aperture 26, the picture part of the film in camera 28 is screened by a blind or shutter so as to remain unexposed. In this manner the "sound marks" 3 are photographed only on the narrow strip of the film shown in Fig. 3.

In order to secure the best results it has been found advisable to have a motion picture positive properly pieced and joined so as to be ready for projecting and exhibiting before recording on the film in camera 28 the rows of "sound marks" that are to accompany the animated picture. This positive should contain on it blank spaces in the position of 3, Fig. 1. On the completed positive ready for the market these blank spaces will be filled in by rows of sound marks, and the spaces for the pictures by the pictures, which can be effected by such a method as printing the positive from the two superimposed negatives, as will be hereinafter described. The pianist or musician, who is to play the accompaniment to be recorded for the picture, watches the positive picture as it is projected on the screen before him from a motion picture apparatus at a definite speed. After he has become familiar with the picture, the positive is again projected through the motion picture apparatus and he then plays the accompaniment to the picture, introducing whatever melodies, chords, compositions or sound effects he thinks appropriate to the action of the objects or characters in the picture. The instrument which he operates is connected and controlled by the mechanisms just described in connection with Figs. 7 and 8, and the "sound marks", corresponding to the sounds and expressions produced, are recorded on the film of camera 28, it being understood that this camera is operated at precisely the same speed at which the picture projecting machine was operated. A developed negative containing the rows of "sound marks", but on which the spaces for the pictures are blank, is superimposed upon

a developed negative properly pieced and joined and having the pictures photographed thereon but having spaces for the "sound marks" left blank, and a print is made from this combined negative which will give a positive containing the pictures 4 and the corresponding rows of "sound marks" 3, shown in Fig. 3.

Another method by which these rows of "sound marks" 3 may be recorded so as to appear as shown in Fig. 3, is by making a marked or perforated roll of the music and sounds, such as is used in player pianos and automatic musical instruments. This roll is then moved in the direction of its length at the proper speed and is photographed through a slit by a motion picture camera, on the film of which the spaces for the pictures are not exposed to the light. The finished positive containing the pictures and "sound marks" in their proper positions may then be made by superimposing two negatives, as above described.

The method of photographing the "sound marks" 3 by the use of the motion picture camera necessarily involves a series of intermittent exposures, due to the operation of the motion picture camera shutter. It will be seen that some of the notes so photographed or marked will be of such length as to be recorded by "sound marks" extending over several consecutive pictures, while others may be of such brief duration as to be represented by "sound marks" contained on only one or two consecutive pictures. It is necessary to have the individual electric circuits so adjusted as to be sufficiently sluggish and therefore not disconnect the current when a certain "sound mark" is continued over two or more consecutive pictures, otherwise the note or sound which was intended to be sustained would not be reproduced continuously. On the other hand, the circuits must be so adjusted as to disconnect whenever their corresponding "sound mark" does not accompany a picture.

One method by which the circuits operating the electro-magnets can be made to hold over without disconnecting the current until the next consecutive row of "sound marks" is in position before the lens, is illustrated by the use of the apparatus shown in Fig. 10. [illegible] is equipped with two bars 51

moment light from the next row of "sound marks" is projected to the selenium cells. Each note, expression lever or sound hammer 57 when operated or sounded makes contact with separate contact points 58 and 59. Contact points 58 are connected by a battery 60 or other source of current to the switch 54 at the shutter and the other wire 55 running from the switch 54 connects with a pole of each electro-magnet 61. The other pole of each electro-magnet is connected by a separate wire 62 to its respective contact point 59. 63 shows the positions of the keys when a piano is used. By this method whenever a sound or expression instrumentality is operated or sounded, each of the particular sounds or expressions is sustained until the next consecutive row of "sound marks" is in position before the projecting lens. The sustaining of the sounds and expressions is effected while the light falling on their corresponding selenium cells is screened off by the opaque sections of the shutter.

A further method of keeping the electro-magnet circuits from disconnecting until the next consecutive picture is in proper position before the lens, is to have the film made with the "sound marks" recorded thereon as shown in Fig. 11. This form of film is practically the same as that shown in Fig. 3, except that in the present form there are additional rows of "sound marks" 2^a, 2^b, etc., in the spaces which, in ordinary films, exist between the pictures. The "sound marks" 2^a are the same as those indicated at 3^a and the "sound marks" at 2^b are the same as those indicated at 3^b, etc. These identical rows of "sound marks" are always separated by the same number of pictures. In allowing the rays of light to pass through the "sound marks" a secondary projecting lens is used which is also focused on the selenium cells. This secondary lens is used only for the "sound marks" 2^a, 2^b, etc., and the main projecting lens is used to allow the rays of light to pass through the "sound marks" 3^a, 3^b, etc. As the rays of light from main lens passes through the "sound marks" 3^a, "sound marks" 2^a appear in position before the secondary lens. As soon as the shutter is about to screen off marks 3^a then the rays of light from the secondary lens passes through 2^a

By the methods just described the action in the motion picture will be synchronous with the accompanying sounds. Should the film break, as happens in operating motion picture machines now in use and should the operator piece together the broken film, the sound and action on the mended film will still remain synchronous, even though one or more pictures of the film be left off as the corresponding "sound marks" for the accompanying sound will have been removed with the pictures.

The method in which the "sound marks" are photographed on a separate film adapted to be continuously driven and geared to the sprocket turning the picture film will next be described. As shown in Fig. 4, a separate film 29 is used for the "sound marks" and instead of having them formed in rows between the pictures, as described in connection with Figs. 1 to 3, the marks for each note, expression element or sound instrument are continuous. The "sound marks" 3′ consist of transparent marks parallel to the direction of the length of the film and vary in length in direct proportion to the length or duration of the sound which they represent. Here the "sound marks" 3′ are similar in appearance to the slits or perforations of the ordinary music roll used in player pianos and automatic musical instruments of that type. This sound film 29 can be photographed from an operating piano or mechanism, such as illustrated in Fig. 7 and described in connection therewith, except that the reel in the photographing camera 28 must move before the lens at a constant continuous speed and not intermittently and with no shutter interference. This can be done by removing the shutter and intermittent sprocket mechanism of the ordinary motion picture machine. As described in connection with the method illustrated in Figs. 1 to 3 and 7 and 8, this film may be made by first making a perforated roll of the sound accompaniment, such as is used for player pianos and then while this roll is moving in the direction of its length and at the proper speed, photographing it through a slit by a motion picture camera from which the shutter and intermittent sprocket mechanism have been removed. The mechanism holding the film 29, mittent manner before the projecting lens used in exhibiting motion pictures and will be thus projected to the screen. The accompanying sound film, however, must move at a constant continuous speed before the lens, which is to project the rays of light through the "sound marks" 3′ on to their respective selenium cells. This can be effected by a take-up mechanism shown in section in Fig. 9. Here the film of "sound marks" 29 unwinds from the spool 33 at an intermittent speed proportionate to the intermittent speed of the picture film 32 to which it is geared. It then passes over sprocket 34 behind a guide bar 35 to form a loop 36 back of a second guide bar 37 and over a second sprocket 38 and then moves at a constant continuous speed in front of a projecting lens 39, which projects and disperses the rays penetrating the "sound marks" 3′ to their corresponding selenium cells located in the path of these rays and connected to their corresponding source of current, relay, electromagnets, and sound producing instruments, as hereinbefore described. If the sprocket 38 is turning at a constant continuous speed it will allow the sound film to pass at such speed before its projecting lens 39, while the loop 36 of the film will decrease and increase in size and supply sufficient lengths of the film, to permit of this constant continuous speed over sprocket 38 and yet allow the film to pass intermittently over sprocket 34 in the direction of the arrow *a*.

Should the sound or picture film described in this method break, to maintain synchronism in the operating of the two films, it would be necessary in repairing the broken film to add a proportionate amount of blank film and thereby keep both films of the original proportionate length.

Referring to Figs. 5 and 6, the invention is shown as applied to a film of double width, one-half of which contains the pictures 38 while the other half contains the "sound marks" 3^2 formed similarly to those illustrated and described in connection with Fig. 4: The film 40 in this instance, is provided with an additional row of perforations 41 to fit cogs on the mechanism in order to prevent buckling of the film in operating it through the projecting ma-

shown in Fig. 3.

Another method by which these rows of "sound marks" 3 may be recorded so as to appear as shown in Fig. 3, is by making a marked or perforated roll of the music and sounds, such as is used in player pianos and automatic musical instruments. This roll is then moved in the direction of its length at the proper speed and is photographed through a slit by a motion picture camera, on the film of which the spaces for the pictures are not exposed to the light. The finished positive containing the pictures and "sound marks" in their proper positions may then be made by superimposing two negatives, as above described.

The method of photographing the "sound marks" 3 by the use of the motion picture camera necessarily involves a series of intermittent exposures, due to the operation of the motion picture camera shutter. It will be seen that some of the notes so photographed or marked will be of such length as to be recorded by "sound marks" extending over several consecutive pictures, while others may be of such brief duration as to be represented by "sound marks" contained on only one or two consecutive pictures. It is necessary to have the individual electric circuits so adjusted as to be sufficiently sluggish and therefore not disconnect the current when a certain "sound mark" is continued over two or more consecutive pictures, otherwise the note or sound which was intended to be sustained would not be reproduced continuously. On the other hand, the circuits must be so adjusted as to disconnect whenever their corresponding "sound mark" does not accompany a picture.

One method by which the circuits operating the electro-magnets can be made to hold over without disconnecting the current until the next consecutive row of "sound marks" is in position before the lens, is illustrated by the use of the apparatus shown in Fig. 10. The shutter 50 is equipped with two lugs 51 and 52 located as shown in Fig. 10, so that when the shutter 50 revolves before the projecting lens 53 they operate a switch 54 which makes and breaks the current flowing through wires 55 and 56. Lug 51 closes the circuit so that the electro-magnets energized by the "sound marks" 3 on the picture before the projecting lens remain energized until the film has passed behind the shutter and the next consecutive picture and row of "sound marks" is before the projecting lens; then lug 52 disconnects the current, at which

or other source of current to the switch 54 at the shutter and the other wire 55 running from the switch 54 connects with a pole of each electro-magnet 61. The other pole of each electro-magnet is connected by a separate wire 62 to its respective contact point 59. 63 shows the positions of the keys when a piano is used. By this method whenever a sound or expression instrumentality is operated or sounded, each of the particular sounds or expressions is sustained until the next consecutive row of "sound marks" is in position before the projecting lens. The sustaining of the sounds and expressions is effected while the light falling on their corresponding selenium cells is screened off by the opaque sections of the shutter.

A further method of keeping the electro-magnet circuits from disconnecting until the next consecutive picture is in proper position before the lens, is to have the film made with the "sound marks" recorded thereon as shown in Fig. 11. This form of film is practically the same as that shown in Fig. 3, except that in the present form there are additional rows of "sound marks" 2^a, 2^b, etc., in the spaces which, in ordinary films, exist between the pictures. The "sound marks" 2^a are the same as those indicated at 3^a and the "sound marks" at 2^b are the same as those indicated at 3^b, etc. These identical rows of "sound marks" are always separated by the same number of pictures. In allowing the rays of light to pass through the "sound marks" a secondary projecting lens is used which is also focused on the selenium cells. This secondary lens is used only for the "sound marks" 2^a, 2^b, etc., and the main projecting lens is used to allow the rays of light to pass through the "sound marks" 3^a, 3^b, etc. As the rays of light from main lens passes through the "sound marks" 3^a, "sound marks" 2^a appear in position before the secondary lens. As soon as the shutter is about to screen off marks 3^a then the rays of light from the secondary lens passes through 2^a and thus the identical marks are projected and superimposed on the selenium cells. This row of marks 2^a remains before the secondary lens until 3^b have replaced 3^a before the main projecting lens, then a shutter screens off 2^a and in a similar manner 2^b next appear before the secondary projecting lens. In this manner, although the film is moving intermittently before the main lens, yet the selenium cells are properly kept in the path of the light until the next row of "sound marks" is in position before the main lens.

still remain synchronous, even though one or more pictures of the film be left off as the corresponding "sound marks" for the accompanying sound will have been removed with the pictures.

The method in which the "sound marks" are photographed on a separate film adapted to be continuously driven and geared to the sprocket turning the picture film will next be described. As shown in Fig. 4, a separate film 29 is used for the "sound marks" and instead of having them formed in rows between the pictures, as described in connection with Figs. 1 to 3, the marks for each note, expression element or sound instrument are continuous. The "sound marks" 3′ consist of transparent marks parallel to the direction of the length of the film and vary in length in direct proportion to the length or duration of the sound which they represent. Here the "sound marks" 3′ are similar in appearance to the slits or perforations of the ordinary music roll used in player pianos and automatic musical instruments of that type. This sound film 29 can be photographed from an operating piano or mechanism, such as illustrated in Fig. 7 and described in connection therewith, except that the reel in the photographing camera 28 must move before the lens at a constant continuous speed and not intermittently and with no shutter interference. This can be done by removing the shutter and intermittent sprocket mechanism of the ordinary motion picture machine. As described in connection with the method illustrated in Figs. 1 to 3 and 7 and 8, this film may be made by first making a perforated roll of the sound accompaniment, such as is used for player pianos and then while this roll is moving in the direction of its length and at the proper speed, photographing it through a slit by a motion picture camera from which the shutter and intermittent sprocket mechanism have been removed. The mechanism holding the film 29, having the "sound marks" photographed thereon, is geared to the sprocket 30, by suitable mechanism 31, of the picture film 32, or it is geared to a mechanism adapted to turn the sound film at the same speed at which it was moving when photographed and thus produce the sounds synchronously with the accompanying pictures. It will be understood that separate lenses are used for the purpose of projecting the pictures of the film 32 and the "sound marks" 3′ of the film 29. The film 32 will operate in the interselenium cells. This can be effected by a take-up mechanism shown in section in Fig. 9. Here the film of "sound marks" 29 unwinds from the spool 33 at an intermittent speed proportionate to the intermittent speed of the picture film 32 to which it is geared. It then passes over sprocket 34 behind a guide bar 35 to form a loop 36 back of a second guide bar 37 and over a second sprocket 38 and then moves at a constant continuous speed in front of a projecting lens 39, which projects and disperses the rays penetrating the "sound marks" 3′ to their corresponding selenium cells located in the path of these rays and connected to their corresponding source of current, relay, electromagnets, and sound producing instruments, as hereinbefore described. If the sprocket 38 is turning at a constant continuous speed it will allow the sound film to pass at such speed before its projecting lens 39, while the loop 36 of the film will decrease and increase in size and supply sufficient lengths of the film, to permit of this constant continuous speed over sprocket 38 and yet allow the film to pass intermittently over sprocket 34 in the direction of the arrow *a*.

Should the sound or picture film described in this method break, to maintain synchronism in the operating of the two films, it would be necessary in repairing the broken film to add a proportionate amount of blank film and thereby keep both films of the original proportionate length.

Referring to Figs. 5 and 6, the invention is shown as applied to a film of double width, one-half of which contains the pictures 38 while the other half contains the "sound marks" 3² formed similarly to those illustrated and described in connection with Fig. 4: The film 40 in this instance, is provided with an additional row of perforations 41 to fit cogs on the mechanism in order to prevent buckling of the film in operating it through the projecting machine. The film could be made in a manner similar to that described in connection with the method illustrated by Fig. 4 but it will be necessary in projecting this film to have the "sound marks" moved at a constant continuous speed before its projecting lens, while the pictures must be moved before the lens which projects them in the intermittent manner usually employed in projecting motion pictures. A convenient way to obtain the film 40 is to first photograph a negative of the original sound film and place it side

by side with a finished and pieced negative of the corresponding picture film, then from the two print a one piece double width positive, such as shown in Fig. 5. The "sound marks" do not neces-arily have to be immediately opposite or adjacent to the particular picture or pictures which they are to accompany in order to have synchronism between the two in projecting. The "sound marks" 3^2 do not pass in front of the lens 42 but to one side of it and consequently are not projected by it. The lens 42 is used to project the pictures as the film 40 comes from the reel 43. After passing the lens 42 the film passes over a take-up mechanism similar to that shown and described in connection with Fig. 9, except that in the present case the sprocket 44, bars 45 and 46, and sprocket 47 are broad enough to accommodate the widened film containing both the pictures and the "sound marks" adjacent to one another. From the take-up mechanism the film passes before the lens 48 and is wound upon reel 49. Lens 48 is used for projecting the rays of light through the "sound marks" and is offset to one side of lens 42. On passing over the sprocket 47 the film is moved at a constant continuous speed instead of intermittently as when passing before lens 42. It will thus be seen that from this arrangement the pictures 38' are intermittently fed so as to be projected by the lens 42 while the "sound marks" 3^2 are passing simultaneously to one side of the lens and therefore not receiving light therefrom. Then later as the film moves with a continuous constant motion before lens 48, the rays of light pass through the "sound marks" 3^2 while the pictures are moving to one side of the lens and receive no light therefrom.

Should the operator have reason to mend a broken film, such as is used in this method, the synchronism of sound and action will not be destroyed in operating the mended film, for every section of the picture film removed a corresponding length of the sound film could be removed.

While I have shown the present invention as applied for the purpose of reproducing sounds, such as the playing of a piano, etc., it is to be understood that the invention is not limited to the particular examples illustrated and described in the present case, as

chronously with the actions in a motion picture film that is being projected, consisting in photographing upon a film sound marks in given relation to the pictures, simultaneously projecting the pictures and rays of light through the sound marks, whereby the pictures will be thrown on a screen and the light from the sound marks will be directed upon selenium cells to close electric circuits and operate suitable sound producing instruments.

2. The herein described method of producing musical sounds and the like synchronously with the actions in a motion picture that is being projected, consisting in photographing pictures on certain portions of a picture film, recording rows of sound marks on other parts of the film, and simultaneously projecting the pictures upon a screen and rays of light through the sound marks upon the light operated means controlling certain sound producing instruments.

3. Apparatus for synchronously producing musical sounds and the like to accompany the projection of motion pictures comprising, a film having picture scenes and sound marks photographed thereon, means for simultaneously projecting the pictures and rays of light through the sound marks, sound producing instruments, and light controlled means upon which the sound marks are projected for operating said sound producing instruments.

4. Apparatus for synchronously producing musical sounds and the like to accompany the projection of motion pictures comprising a film having sound marks and pictures contained thereon in a given relation, sound producing instruments, light operated means adapted to operate said instruments, and means for simultaneously projecting said pictures and rays of light through said sound marks onto said light operated means.

5. Apparatus for synchronously producing musical sounds and the like to accompany the projection of motion pictures comprising a picture film having sound marks thereon, sound producing instruments, electro-magnetic operating means therefor, electric circuits including said electro-magnetic means, light-operated means for closing and opening said circuits, and means for simultaneously projecting the pictures and light

taneously projecting the pictures and rays of light passing through said sound marks on to said selenium cells for opening and closing said circuits.

7. A motion picture machine comprising in combination, a plurality of independently operable sound producing elements, and light operated means automatically controlled by the film for independently operating said elements synchronously with the actions of the pictures.

8. Apparatus for synchronously producing musical sounds and the like to accompany the projection of motion pictures comprising a picture-film having horizontal rows of transparent sound marks on sections thereof immediately preceding each picture, sound producing instruments, electro-magnetic means for actuating said instruments, a plurality of selenium cells, electric circuits including said selenium cells and electro-magnets, light operated means for opening and closing said circuits, said light operated means being adapted to be controlled by the rays of light through the sound marks.

9. Apparatus for synchronously producing musical sounds and the like to ac
pany the projection of motion pictures
prising a picture-film having horiz
rows of transparent sound marks on
tions thereof between the pictures, s
producing instruments, electro-ma
operating means therefor, electric ci
including said electro-magnetic means,
operated means for closing and openin
circuits, said light operated means
adapted to be controlled by the rays o
through the sound marks.

10. Apparatus for synchronously p
ing musical sounds and the like to a
pany the projection of motion picture
prising a film having picture scene
sound marks photographed thereon,
for simultaneously projecting the p
and rays of light through the sound
means for reducing the magnified lig
from the sound marks, sound produci
struments, and light controlled means
which the sound marks are project
operating said sound producing instru

In testimony whereof I affix my sig

ELMER LEWIS GREENSFEL

h a finished and pieced negative sponding picture film, then from nt a one piece double width posi- s shown in Fig. 5. The "sound not neces-arily have to be imme- osite or adjacent to the particu- or pictures which they are to in order to have synchronism two in projecting. The "sound do not pass in front of the lens ne side of it and consequently jected by it. The lens 42 is used he pictures as the film 40 comes eel 43. After passing the lens passes over a take-up mechanism hat shown and described in con- h Fig. 9, except that in the pres- e sprocket 44, bars 45 and 46, et 47 are broad enough to ac- the widened film containing ictures and the "sound marks" one another. From the take-up the film passes before the lens round upon reel 49. Lens 48 is jecting the rays of light through marks" and is offset to one side On passing over the sprocket 47 moved at a constant continuous ad of intermittently as when ore lens 42. It will thus be seen his arrangement the pictures 38' ently fed so as to be projected 42 while the "sound marks" 3² simultaneously to one side of d therefore not receiving light Then later as the film moves nuous constant motion before rays of light pass through the ks" 3² while the pictures are mov- ide of the lens and receive no om.

operator have reason to mend n, such as is used in this method, hism of sound and action will oved in operating the mended ry section of the picture film responding length of the sound removed.

ve shown the pre-ent invention r the purpose of reproducing as the playing of a piano, etc., derstood that the invention is the particular examples illus- scribed in the present case, as

chronously with the actions in a motion picture film that is being projected, consisting in photographing upon a film sound marks in given relation to the pictures, simultaneously projecting the pictures and rays of light through the sound marks, whereby the pictures will be thrown on a screen and the light from the sound marks will be directed upon selenium cells to close electric circuits and operate suitable sound producing instruments.

2. The herein described method of producing musical sounds and the like synchronously with the actions in a motion picture that is being projected, consisting in photographing pictures on certain portions of a picture film, recording rows of sound marks on other parts of the film, and simultaneously projecting the pictures upon a screen and rays of light through the sound marks upon the light operated means controlling certain sound producing instruments.

3. Apparatus for synchronously producing musical sounds and the like to accompany the projection of motion pictures comprising, a film having picture scenes and sound marks photographed thereon, means for simultaneously projecting the pictures and rays of light through the sound marks, sound producing instruments, and light controlled means upon which the sound marks are projected for operating said sound producing instruments.

4. Apparatus for synchronously producing musical sounds and the like to accompany the projection of motion pictures comprising a film having sound marks and pictures contained thereon in a given relation, sound producing instruments, light operated means adapted to operate said instruments, and means for simultaneously projecting said pictures and rays of light through said sound marks onto said light operated means.

5. Apparatus for synchronously producing musical sounds and the like to accompany the projection of motion pictures comprising a picture film having sound marks thereon, sound producing instruments, electro-magnetic operating means therefor, electric circuits including said electro-magnetic means, light-operated means for closing and opening said circuits, and means for simultaneously projecting the pictures and light through the sound marks on to said light

taneously projecting the pictures and rays of light passing through said sound marks on to said selenium cells for opening and closing said circuits.

7. A motion picture machine comprising in combination, a plurality of independently operable sound producing elements, and light operated means automatically controlled by the film for independently operating said elements synchronously with the actions of the pictures.

8. Apparatus for synchronously producing musical sounds and the like to accompany the projection of motion pictures comprising a picture-film having horizontal rows of transparent sound marks on sections thereof immediately preceding each picture, sound producing instruments, electro-magnetic means for actuating said instruments, a plurality of selenium cells, electric circuits including said selenium cells and electro-magnets, light operated means for opening and closing said circuits, said light operated means being adapted to be controlled by the rays of light through the sound marks.

9. Apparatus for synchronously producing musical sounds and the like to accompany the projection of motion pictures comprising a picture-film having horizontal rows of transparent sound marks on sections thereof between the pictures, sound producing instruments, electro-magnetic operating means therefor, electric circuits including said electro-magnetic means, light operated means for closing and opening said circuits, said light operated means being adapted to be controlled by the rays of light through the sound marks.

10. Apparatus for synchronously producing musical sounds and the like to accompany the projection of motion pictures comprising a film having picture scenes and sound marks photographed thereon, means for simultaneously projecting the pictures and rays of light through the sound marks, means for reducing the magnified light rays from the sound marks, sound producing instruments, and light controlled means upon which the sound marks are projected for operating said sound producing instruments.

In testimony whereof I affix my signature.

ELMER LEWIS GREENSFELDER.

between the two in projecting. The "sound marks" 3^2 do not pass in front of the lens 42 but to one side of it and consequently are not projected by it. The lens 42 is used to project the pictures as the film 40 comes from the reel 43. After passing the lens 42 the film passes over a take-up mechanism similar to that shown and described in connection with Fig. 9, except that in the present case the sprocket 44, bars 45 and 46, and sprocket 47 are broad enough to accommodate the widened film containing both the pictures and the "sound marks" adjacent to one another. From the take-up mechanism the film passes before the lens 48 and is wound upon reel 49. Lens 48 is used for projecting the rays of light through the "sound marks" and is offset to one side of lens 42. On passing over the sprocket 47 the film is moved at a constant continuous speed instead of intermittently as when passing before lens 42. It will thus be seen that from this arrangement the pictures 38′ are intermittently fed so as to be projected by the lens 42 while the "sound marks" 3^2 are passing simultaneously to one side of the lens and therefore not receiving light therefrom. Then later as the film moves with a continuous constant motion before lens 48, the rays of light pass through the "sound marks" 3^2 while the pictures are moving to one side of the lens and receive no light therefrom.

Should the operator have reason to mend a broken film, such as is used in this method, the synchronism of sound and action will not be destroyed in operating the mended film, for every section of the picture film removed a corresponding length of the sound film could be removed.

While I have shown the present invention as applied for the purpose of reproducing sounds, such as the playing of a piano, etc., it is to be understood that the invention is not limited to the particular examples illustrated and described in the present case, as various other instruments and sound producing mechanisms can be equally well operated by the use of this method, the electro-magnets either depressing the notes and expression pedals as described or controlling stops in front of tracker-board apertures in electrically operated instruments.

Having described my invention what I claim is:—

1. The hereindescribed method of producing musical sounds and the like synchronously with the actions in a motion picture that is being projected, consisting in photographing pictures on certain portions of a picture film, recording rows of sound marks on other parts of the film, and simultaneously projecting the pictures upon a screen and rays of light through the sound marks upon the light operated means controlling certain sound producing instruments, the light from the sound marks will be directed upon selenium cells to close electric circuits and operate suitable sound producing instruments.

2. The herein described method of producing musical sounds and the like synchronously with the actions in a motion picture that is being projected, consisting in photographing pictures on certain portions of a picture film, recording rows of sound marks on other parts of the film, and simultaneously projecting the pictures upon a screen and rays of light through the sound marks upon the light operated means controlling certain sound producing instruments.

3. Apparatus for synchronously producing musical sounds and the like to accompany the projection of motion pictures comprising, a film having picture scenes and sound marks photographed thereon, means for simultaneously projecting the pictures and rays of light through the sound marks, sound producing instruments, and light controlled means upon which the sound marks are projected for operating said sound producing instruments.

4. Apparatus for synchronously producing musical sounds and the like to accompany the projection of motion pictures comprising a film having sound marks and pictures contained thereon in a given relation, sound producing instruments, light operated means adapted to operate said instruments, and means for simultaneously projecting said pictures and rays of light through said sound marks onto said light operated means.

5. Apparatus for synchronously producing musical sounds and the like to accompany the projection of motion pictures comprising a picture film having sound marks thereon, sound producing instruments, electro-magnetic operating means therefor, electric circuits including said electro-magnetic means, light-operated means for closing and opening said circuits, and means for simultaneously projecting the pictures and light through the sound marks on to said light-operated means.

6. Apparatus for synchronously producing musical sounds and the like to accompany the projection of motion pictures comprising a picture film having sound marks thereon, sound producing instruments, electro-magnetic means for actuating said instruments, a plurality of selenium cells, electric circuits including said selenium cells and electro-magnets, and means for simul-

light operated means automatically controlled by the film for independently operating said elements synchronously with the actions of the pictures.

8. Apparatus for synchronously producing musical sounds and the like to accompany the projection of motion pictures comprising a picture-film having horizontal rows of transparent sound marks on sections thereof immediately preceding each picture, sound producing instruments, electro-magnetic means for actuating said instruments, a plurality of selenium cells, electric circuits including said selenium cells and electro-magnets, light operated means for opening and closing said circuits, said light operated means being adapted to be controlled by the rays of light through the sound marks.

9. Apparatus for synchronously produc- including said electro-magnetic means, l operated means for closing and opening circuits, said light operated means b adapted to be controlled by the rays of l through the sound marks.

10. Apparatus for synchronously pro ing musical sounds and the like to ac pany the projection of motion pictures c prising a film having picture scenes sound marks photographed thereon, m for simultaneously projecting the pict and rays of light through the sound m means for reducing the magnified light from the sound marks, sound producin struments, and light controlled means which the sound marks are projected operating said sound producing instrum

In testimony whereof I affix my signa

ELMER LEWIS GREENSFELD

[fol. 101] MOTION TO SHIFT BURDEN OF PROOF—March 9, 1926

And now come Hans Vogt, Joseph Massolle and Josef Engl, by their attorneys, and move that the burden of proof in the above entitled interference be shifted to place the same on the party DeForest, and the times set for taking testimony be modified accordingly; this in view of the fact that applicant's application involved in said interference was filed under the International Convention, and that applicants filed an application in Germany, covering the same invention as that of their said application involved in this interference, as stated in the original oath of their said application, at a date earlier than the filing date in the United States of the party DeForest and that applicants should accordingly be given the benefit of the filing date of said corresponding German application, and also in view of the fact DeForest's patent involved in said interference was issued during the pendency of applicants' application. A certified copy of the said German application of the same inventors, as filed, V. 16431 VI/57a 2, filed on April 14, 1921, is attached herewith.

Hans Vogt, Joseph Massolle, and Josef Engl, by
Ward, Crosby and Smith, their Attorneys.

Dated, New York, N. Y., March 8, 1926.

Bescheinigung

Die Herren Hans Vogt in Berlin-Wilmersdorf, Joseph Massolle und Dr. Joseph Engl in Berlin-Grunewald, haben im Deutschen Reiche ein Gesuch um ein Erfindungspatent für ein "Verfahren zur Herstellung kombinierter Tonbildfilme" am 14. April, 1921, beim Reichspatentamt hinterlegt.

Das angeheftete Stück ist eine richtige und genaue Wiedergabe der ursprünglichen Unterlage dieser Patentanmeldung.

Berlin, den 9 Dezember, 1925.

Der Präsident des Reichspatentamts. J. V. W. Kahl.
V. 16431. VI/57a2.

[fol. 102]

Tempelhof, den 13 April, 1921.
Albrechtstrasse 104.

C. R. Forth, Oberingenieur.

Verfahren zur Herstellung kombinierter Tonbildfilme

Patentanmeldung

Bei der Herstellung sprechender Filme ist es insbesondere aus Betriebsgründen von grossem Vorteil, die Tonreihe und die Bildreihe auf einen gemeinsamen materiellen Träger (Film) aufzubringen. Bei diesem Verfahren ergeben sich aber infolge der bei der kinematographischen Aufnahme schwankenden Lichtverhältnisse häufig Unterschiede im Belichtungsgrad der Bromsilberschicht und zwar in der Weise, dass die Bildreihe über-bezw. unterbelichtet wird. Da der gleiche Film aber auch nahe an der Bildreihe die immer normal belichtete Tonzeichenreihe trägt, lassen sich bei kombinierten Negativen diese Unterschiede durch Entwicklung, Abschwächen, Verstärken etc. nicht ausgleichen. Sie lassen sich nur dadurch beheben, dass die unterbezw. überbelichteten Negativstellen eine getrennte, entsprechend abgepasste Behandlung erhalten.

Technisch ist dies so gut wie unmöglich, solange sich die beiden Ereignisreihen auf dem gleichen Film befinden.

Erfindungsgemäss wird diese Schwierigkeit dadurch beseitigt, dass zur Herstellung der Negative entweder gänzlich getrennte Filme vorgesehen sind oder solche, die bei der Aufnahme wohl zusammenhängen, vor der Entwicklung aber auseinandergetrennt werden. Der Synchronismus wird in beiden Fällen durch die Perforation und durch entsprechende Marken gewährleistet.

Die Herstellung der Positivfilme kann erfolgen, indem man die beiden Negativfilme, vorteilhaft nacheinander, auf den gleichen Positivfilm kopiert. Man kann aber auch die beiden Negativfilme vorher der Länge nach miteinander verkleben und dieses so gewonnene combinierte Negativ wie üblich kopieren.

Patentansprüche

1.) Verfahren zur Herstellung kombinierter Tonbildfilme, wobei die Ton-Bild-Positive auf einen gemeinsamen [fol. 103] Film kopiert sind dadurch gekennzeichnet, dass die Negative getrenntentwickelt werden.

2.) Verfahren zur Herstellung von kombinierten Tonbildfilmen gemäss Anspruch 1, dadurch gekennzeichnet, dass die Aufnahme der Tonzeichen und der Reihenbilder auf getrennten Filmen erfolgt.

3.) Verfahren zur Herstellung von kombinierten Tonbildfilmen gemäss Anspruch 1, dadurch gekennzeichnet, dass die Aufnahme der Tonzeichen und der Reihenbilder auf einen gemeinsamen Film erfolgt, der nachher getrennt wird.

4.) Verfahren zur Herstellung von kombinierten Tonbildfilmen gemäss Anspruch 1—3, dadurch gekennzeichnet, dass die Negative nach erfolgter Behandlung der Länge nach miteinander vereinigt werden.

R. A. Si.

Certificate

Messrs. Hans Vogt, of Berlin-Wilmersdorf, Joseph Massolle and Dr. Joseph Engl, of Berlin-Grunewald, have filed an application for a German Patent with the Imperial Patent Office, on April 14, 1921, covering "Method of making Combination Fono-films".

The document hereunto attached is a true and exact copy of the original papers of this application.

Berlin, December 9, 1925.

President of the Imp. Patent Office, by Proxy:
(Signed) W. Kahl. (Embossed Seal of German Patent Office.) V. 16431. VI/57a2.

Albrechtstrasse 104,
Tempelhof, April 13, 1921.

C. R. Forth, Chief Engineer.

Method of Making Combination Fono-Films

Patent Application

In the production of speaking films, it is, particularly for operating reasons, of great advantage to deposit or fix the fono-series and the picture-series upon a common physical carrier or support (film). However, on account of vari- [fol. 104] ations in the lighting conditions associated with cinematographic picture recording work, differences are often produced in the degree of exposure of the silver bromide coat with the result that the picture series is frequently

over- or under-exposed. However, on account of the fact that the same film carries always both the picture-series and the normally exposed fono-series close together, the said differences, in combination negatives, can not be eliminated by developing, toning down (clearing) intensification, etc. Indeed, they can only be obviated by that the under-exposed and the over-exposed portions of the negative are subjected to a separate and conveniently adapted treatment.

Technically, this is well nigh impossible as long as the two series of events are fixed upon the same film strip.

Now, according to the invention this difficulty is obviated by that for the production of the negatives either entirely distinct films are used, or else films which, while still united during the recording work, are severed prior to development. Synchronism in either case is insured by the perforation or else by corresponding datum marks.

The preparation of the positive films can be accomplished by that the two negatives, preferably one after the other, are copied upon the same positive film. However, the procedure could also be so that the two negatives are first pasted together in longitudinal direction, whereupon the combination negative thus obtained is copied in the customary manner.

Claims

1. Method of making combination fono-films in which the fono- and picture-positives are copied upon a common or joint film, characterized by that the negatives are separately developed.

2. Method of making combination fono-films according to claim 1., characterized by that the recording of the fono-series and of the picture-series is effected upon separate films.

3. Method of making combination fono-films according to claim 1., characterized by that the recording of the fono-series and of the picture-series is effected upon one and the same film strip, the latter being subsequently severed or divided.

[fol. 105] 4. Method of making combination fono-films according to claims 1. to 3., characterized by that the negatives, after treatment, are reunited with each other.

DECISION OF THE EXAMINER OF INTERFERENCES—April 13, 1926

The party Vogt, Massole and Engl moves to shift the burden of proof to the party DeForest. They base their motion on their German application, filed April 14, 1921, referred to in the oath of their application here in issue, filed March 29, 1922. As the application was filed in this country within twelve months from the date the foreign application was filed they are entitled, upon proper proof of the foreign application, to the benefits to be derived therefrom as provided by Section 4887 of the Revised Statutes.

The motion is accompanied by a certified copy of the original papers of the German patent application, and a translation of the same, in accordance with the procedure established by Steel and Steel v. Myers, 205 O. G., 1021; 1914 C. D., 74.

A comparison of the German application of Vogt, Massolle and Engl and their application here involved leads to the conclusion that they are substantially the same and that the invention as defined by the counts in issue is disclosed in their German application.

It appears that the motion should be granted. The party DeForest did not make an appearance at the hearing on this motion or file a brief opposing the motion. The motion is granted.

The order of the parties now becomes DeForest v. Vogt, Massolle and Engl.

The times for taking testimony and for final hearing are reset as follows:

Testimony in chief of DeForest to close June 12, 1926.

Testimony of Vogt, Massolle and Engl to close July 12, 1926.

Rebuttal testimony of DeForest to close July 27, 1926.

Final hearing September 28, 1926, at 11 A. M.

H. I. Houston, Examiner of Interferences.

[fol. 106] DECISION OF EXAMINER OF INTERFERENCES—July 14, 1928.

This controversy involves talking motion pictures and has to do particularly with a process for making films. It

was found that if the picture and sound were recorded directly upon the same film either one or the other would be unsatisfactory, because the same amount of light is not suitable for recording both picture and sound. According to the process of this interference the picture and sound are recorded on separate films and thereafter combined. It is to be particularly observed that each of the two counts specifies that the picture and sound are to be simultaneously photographed.

This interference was set up with DeForest as the senior party. On motion decided April 13, 1926, Vogt et al. were given the benefit of their German application date of April 14, 1921, thereupon becoming the senior party.

The invention has been patented to the party DeForest. Vogt et al. copied the two counts from the DeForest patent but they were rejected by the primary examiner. The rejection was reversed by the Examiners-in-Chief and in their opinion they mentioned the word "simultaneously" occurring in both claims as distinguishing these claims from the Greenfelder patent cited. Under the circumstances the usual rule in interferences that each limitation of the claims is to be deemed essential has particular force. The counts read as follows:

Count 1. The method of producing talking moving pictures on the same film which comprises photographing simultaneously upon separate films the picture and the sound, and photographing the sound record on an unexposed portion of the picture film.

Count 2. The method of producing talking moving pictures on the same film which comprises photographing simultaneously upon separate films the picture and the sound, and photographing the sound record on an unexposed portion of the picture film between the marginal edge and the sprocket perforations thereof.

The testimony submitted by DeForest fails to prove that he had conceived this feature of simultaneously photo- [fol. 107] graphing the picture and the sound prior to his filing date. The notes in the DeForest notebook relied upon do not include this feature, and the corroborating witnesses do not support DeForest with respect to this feature of simultaneity. Furthermore, these corroborating witnesses had no means of fixing the date.

Garity knows that DeForest kept a running notebook with which he was conversant in a general way, and he recognizes the two notebooks put into evidence (X Q. 41, p. 45). He states, however, in answer to X Q. 40, page 45, that he is not able to say that a particular record was made on a certain date, his memory not going back so far. The notes purport to have been made December, 1920, and January and April, 1921. Vogt et al. having a filing date under the International Convention of April 14, 1921, cannot be considered as anticipated by this testimony by Garity.

The witness Senner likewise has no way of fixing any date prior to the filing date of Vogt et al. DeForest purchased from Senner's employer on February 18, 1921, a camera, and Senner is of the impression that it was within a week or ten days after this purchase that DeForest talked with him about producing talking motion pictures. The dates here are so close, however, that the impression of the witness is not sufficiently reliable to overcome the record date of Vogt et al.

It is also true that the testimony of neither of these witnesses includes the feature of simultaneity. In fact the answer of Garity to Q. 20, p. 41, seems to contradict the thought of simultaneity, but at all events, this thought is not affirmatively present. The testimony of Torma does not appear to be regarded by DeForest as supporting his case for priority of conception.

DeForest being admittedly the last to reduce to practice, his reduction to practice consisting of the filing of his application, July 16, 1921, he could in any event prevail only if he established diligence between the German filing date of the other party and his own filing date. The German filing, as already stated, was April 14, 1921, so that DeForest would have the duty of proving diligence during this interval of three months.

It is not urged upon DeForest's behalf that he was doing anything with the present invention from Vogt et al.'s rec- [fol. 108] ord date until he submitted to his patent counsel, on June 30, 1921, the date for his application. According to the testimony of his assistant Garity an actual reduction to practice could have been made without difficulty.

It is the contention on behalf of DeForest that he was working on the problem of recording sound, and should be

credited with diligence upon the basis of this activity. But this work does not amount to diligence in reducing to practice an invention involving the combination of sound and pictures. There are authorities to the effect that diligence on a whole machine may be considered as diligence toward the elements of such machine, but the present case is not of that class and DeForest can not be credited with diligence for one invention upon the basis of what he was doing toward an independent, even if related, invention. On the ground that DeForest has established no date earlier than the record date of Vogt et al., and on the further ground that he was not diligent during the three months between Vogt et al.'s filing date and his own filing date, it is ruled that Vogt et al. are the first inventors.

Priority of invention of the subject matter in issue is hereby awarded to Hans Vogt, Joseph Massolle and Josef Engl, the senior party.

Limit of appeal: August 3, 1928.

H. I. Houston, Examiner of Interferences.

APPEAL TO THE BOARD OF APPEALS—July 18, 1928

Now comes the party DeForest by his attorneys and hereby appeals from the decision of the Examiner of Interferences dated July 14, 1928, in the above entitled interference and bases his appeal on the following grounds:

1. The Honorable Examiner of Interferences erred in awarding priority of invention to Engl, Massolle and Vogt.

2. The Honorable Examiner of Interferences erred in not awarding priority of invention to DeForest.

3. The Honorable Examiner of Interferences erred in ruling that DeForest failed to prove that he conceived the feature of simultaneously photographing the picture and sound record prior to his filing date.

[fol. 109] 4. The Honorable Examiner of Interferences erred in ruling that the testimony of DeForest as to the date*d* when he made the entries in his note book are not corroborated by Garity.

5. The Honorable Examiner of Interferences erred in ruling that the testimony of DeForest and Senner taken

together did not establish a conception of the invention before April 14, 1921, the foreign filing date of Engl, Massolle and Vogt.

6. The Honorable Examiner of Interferences erred in holding that DeForest was not diligent between the dates of April 14, 1921 and July 16, 1921, the filing date of his application.

7. The Honorable Examiner of Interferences erred in ruling that the work DeForest was doing between April 14, 1921, and July 16, 1921, should not be credited as activity to show diligence in reducing to practice the invention of this interference.

The appeal fee of $25.00 is enclosed herewith.
An oral hearing is requested.
Respectfully, Darby & Darby, Attorneys for DeForest.

Dated: New York, N. Y., July 17, 1928.

DECISION OF BOARD OF APPEALS—January 7, 1930

This is an appeal by DeForest from the decision of the Examiner of Interferences awarding priority of invention to Engl, Massolle and Vogt, the senior party, upon all the counts which read as follows:

1. The method of producing talking moving pictures on the same film which comprises photographing simultaneously upon separate films the picture and the sound, and photographing the sound record on an unexpected portion of the picture film.

2. The method of producing talking moving pictures on the same film which comprises photographing simultaneously upon separate films the picture and the sound, and [fol. 110] photographing the sound record on an unexposed portion of the picture film between the marginal edge and the sprocket perforations thereof.

The counts are claims 1 and 3 of the patent No. 1,489,314 of DeForest and the interference was originally declared with DeForest as the senior party but upon motion, Vogt

et al., by a decision dated April 13, 1926, were given the benefit of their German application date of April 14, 1921, and made the senior party.

The Examiner of Interferences points out that Vogt et al. copied the two counts from the DeForest patent but they were rejected by the Primary Examiner. The rejection was reversed by the Board of Examiners-in-Chief, and in their opinion they mentioned the word "simultaneously" occurring in both claims as distinguishing them from the Greenfelder patent cited against them. He therefore emphasized in his decision the word "simultaneously" as an essential limitation in the claims. He held that the testimony submitted by DeForest fails to prove that he had conceived this feature of *simultaneously* photographing the picture and the sound prior to his filing date.

For proof of conception DeForest relied primarily upon his note book No. 2, DeForest Exhibit 1, in which, under date of December 28, 1920, in an entry which reads:

Developed this last 10 minutes until wholly fogged. This would be too long for cine picture. Hence will probably need to make two negatives (picture and sound) and print on same pos.

A second entry under date of Jan. 18, 1921, reads:

Developed 11 minutes (very cold day) longer development is best for sound film but not for picture. Hence will probably use 2 films.

These notes clearly indicate that as the sound and picture films require a different degree or time of development, it would be necessary to use two films and develop them separately. The Examiner of Interferences held that there was nothing in these notes to indicate that the sound and picture films were to be photographed "simultaneously" as required by the counts.

[fol. 111] DeForest, in his brief, contends that the object of the invention is to synchronize the sounds with the movement of the lips of a person in the picture and that it is at once apparent that the picture and sound must be recorded simultaneously. He further points out that on the motion to shift the burden of proof, the Law Examiner gave to Engl et al. the benefit of the filing date of his German application and if it be held that DeForest's testimony

fails to support the issues, it is equally true that the German application of Engl et al. fails in the same respect.

In the German application we find the following:

> According to the invention this difficulty is obviated in that for the making of the negatives either entirely separate films are provided or those which although still united during the recording are, however, detached from each other before the developing. Synchronism in both cases is insured by perforation and by suitable marks.

In our opinion the statements that the films are still united during the recording indicates that the record is made simultaneously on both films and this is further borne out by the statement that, when separated for development purposes, the synchronization is insured by perforations and suitable marks so that they can be reconnected with proper registration. The same disclosure is found in the U. S. application of Engl et al.

As to the DeForest testimony, it appears that the reason why two films were to be used was that different degrees of development were necessary for the sound and picture negatives and it might seem obvious that the original idea which rendered this change necessary was that the sound and pictures were supposed to be photographed simultaneously. At this time only sound had been photographed in the laboratory which may be the reason why nothing was said in the notes as to simultaneous photography of the sound and picture. While the simultaneous exposure of the sound and picture negatives would seem to be the most obvious procedure, the brief of Engl et al. points out that other methods were known prior to DeForest's alleged conception, (see Engl et al. brief, pages 24 and 25,) and appear to be disclosed in the patent to Greenfelder, No. 1,254,684, which was cited in the application of Engl et al., and the [fol. 112] burden was on DeForest, as the junior party, to prove his case. Furthermore, he must rely for corroboration upon his witnesses Garity and Senner. Garity has no way of fixing the dates when the entries were made in the note books and these dates are fixed only by DeForest's own testimony. Garity merely knows that he saw the note books between December, 1920, and prior to DeForest's trip to Germany the last of July, 1921, and that, at some time, DeForest discussed the subject matter of the notes

with him. Senner can fix no date except with relation to the purchase of a camera from him on February 18, 1921, and thinks that DeForest, within a week or ten days thereafter, brought some films to him for development which films contained both sound and picture records which were of unequal exposure. DeForest suggested that it would be best to use separate negatives while he discouraged this method and suggested the use of light of different intensity in making the records. This disclosure does not mention "simultaneous" exposure and the time between about March 1 and April 14, 1921, when Engl et al. entered the field is so short that a person testifying six or seven years after the event could hardly fix the time with sufficient definiteness. DeForest says (X Q. 74) that it was several weeks after he got the camera before he had the necessary attachment placed on same for recording sound on the same film with the picture. We must, therefore, agree with the Examiner of Interferences that DeForest has failed to establish conception of the invention in issue prior to the constructive reduction to practice of the senior party.

Even if DeForest were given a conception as of January 1, 1921, the date set up in his preliminary statement, he would have to prove diligence from just prior to April 14, 1921, when Engl et al. entered the field, up to his filing date of July 16, 1921. There is no testimony which clearly establishes any work done on the invention in issue from January 1, 1921, up to April 14, 1921, and DeForest seeks to rely upon his work on the general subject of talking moving pictures. This work was the subject of the other interference No. 51,947, and the present invention relates to entirely different subject matter. His note books show that he had already obtained good results in making sound [fol. 113] records and after obtaining the moving picture camera on February 18, 1921, he could have coupled the two cameras without great difficulty and reduced the invention to practice, but on page 13 of his record (Q. 25) he admits that he had not attempted to actually use the invention of the interference prior to filing his application on July 16, 1921. This is also verified by the testimony of Garity on page 41, Q. 20, page 47, X Q. 52, and page 48, X Q. 55.

DeForest has failed to prove conception prior to his filing date and even if he had he has not established the diligence required of him.

The decision of the Examiner of Interferences is affirmed.

Wm. A. Kinnan, First Assistant Commissioner; Frank C. Skinner, Examiner-in-Chief; G. R. Ide, Examiner-in-Chief, Board of Appeals.

NOTICE OF APPEAL TO COURT OF APPEALS—February 24, 1930

And now comes Lee DeForest, by Darby & Darby, his attorneys, and gives notice to the Commissioner of Patents of his appeal to the United States Court of Customs and Patent Appeals from the decision of the Board of Appeals rendered on or about January 7, 1930, awarding priority of invention to Vogt, Massolle and Engl in the above entitled case, and assigns as his reasons for the appeal the following:

1. The Board of Appeals erred in awarding priority of invention to Vogt et al.

2. The Board of Appeals erred in failing to award priority of invention to Lee DeForest.

3. The Board of Appeals erred in holding in effect that Lee DeForest failed to prove conception prior to his filing date.

4. The Board of Appeals erred in holding in effect that DeForest had not established diligence.

[fol. 114] 5. The Board of Appeals erred in holding that DeForest was required to establish diligence.

Lee DeForest, by Darby & Darby, his Attorneys.

Dated: New York, N. Y., February 21, 1930.

Indorsed: United States Court of Customs and Patent Appeals. Filed Apr. 9, 1930. Arthur B. Shelton, Clerk.

[fol. 115] [Stamp:] United States Court of Customs & Patent Appeals. Filed Jan. 28, 1931. Arthur B. Shelton, Clerk.

IN THE UNITED STATES COURT OF CUSTOMS AND PATENT APPEALS

Patent Appeal Docket No. 2749

Interference No. 53,103

LEE DEFOREST

v.

VOGT, MASSOLLE AND ENGL

Darby & Darby, Attorneys for Lee DeForest. Charles M. Thomas, Samuel E. Darby, Jr., Louis D. Fletcher, of Counsel.

BRIEF FOR DEFOREST

[fol. 116] INDEX

Origin of the Counts	95
The Issue	96
Assignment of Errors	96
The Subject-Matter	96
The Counts of the Interference	98
DeForest's Proofs	99
On the Question of Reduction to Practice	102
On the Question of Diligence	104
Summary	107
The Fundamental Error of the Patent Office Tribunals	107
Conclusion	112

Table of Cases Cited

Chapman v. Candee, C. D. 1872, 190, 2 O. G. 245	105
McTammany v. Needham, 18 O. G. 1050	105
Stapleton v. Kinney, 96 O. G. 1432	105

Authorities

Robinson on Patents, Vol. I, p. 548 .....

[fol. 117] IN THE UNITED STATES COURT OF CUSTOMS AND PATENT APPEALS

Patent Appeal Docket No. 2749

Interference No. 53103

LEE DEFOREST

v.

VOGT, MASSOLLE AND ENGL

BRIEF FOR DEFOREST

This is an appeal by Lee DeForest, the original senior party of a patent interference proceeding, from the decision of the Board of Appeals awarding priority of invention of the subject-matter in issue to three German inventors, Messrs. Vogt, Massolle and Engl.

Origin of the Counts

The counts forming the subject-matter of the interference originated in DeForest, and constitute claims 1 and 3 of his patent No. 1,489,314, granted April 8, 1924, on application filed July 16, 1921.

After the issuance of the DeForest patent, Vogt et al. copied the claims in their pending application Serial No. 547,860, filed March 29, 1922 (eight months subsequent to the DeForest filing date).

After the declaration of the interference, Vogt et al. moved to shift the burden of proof, basing their motion on an application filed by them in Germany on April 14, 1921. This motion was not opposed by DeForest (for reasons [fol. 118] hereinafter discussed) and hence was granted, whereby Vogt et al. were accorded an effective date of April 14, 1921. They have taken no testimony and are restricted to that date for conception of the invention.

Dr. DeForest took testimony and established, by contemporaneous written records and full corroboration by

disinterested witnesses, conception of the invention at least as early as January 18, 1921, three months prior to the record date to which Vogt et al. are restricted.

The Examiner of Interferences and the Board of Appeals awarded priority of invention to Vogt et al. solely because of an interpretation placed on the language of the counts forming the subject-matter of the interference, which interpretation we attack as not only unwarranted, but also as wholly opposed to the decision of the Examiner of Interferences in shifting the burden of proof and making effective to Vogt et al. the filing date of their German application. In other words, if the Interference Tribunals are correct in their interpretation of the subject-matter of claims 1 and 3 of the DeForest patent, then the earliest date available to Vogt et al. for conception of the invention in issue would be the filing date of their United States application.

The Issue

Thus, the issue is well defined, and consists of the determination of whether or not DeForest has established conception of the invention, defined by the claims in issue, prior to the filing date of the German application of Vogt et al. There is no question of diligence involved, as we view it, because only three months elapsed between DeForest's recorded conception of the invention and his filing date, of which period approximately one month was consumed in the preparation of his patent application (Rec. p. 89), and the undisputed testimony in the case is that DeForest was [fol. 119] devoting virtually his entire time, during all the time with which we are here concerned, to the main problem to which the invention here involved was incidental.

Assignment of Errors

The assignment of errors will be found at page 113 of the record, and all of the errors assigned will be relied upon.

The Subject-Matter

The subject-matter in controversy relates to the talking motion picture art, and more particularly to the "phonofilm" art, where both the picture and incidental sounds are photographically recorded on a film. In the motion

picture industry, the drama or other "action" being "filmed," is photographed with the usual motion picture camera, thus producing the roll of "negative" film. The "negative" is then developed by a standard developing process employed in the motion picture industry, and rolls of "positive" film are photographically printed therefrom in any desired numbers. These "positive" prints are then distributed to the theaters which have contracted for the showing of the picture, and are exhibited by means of the usual projection machines in the well understood way.

The *talking* motion picture industry follows the same general routine, the only difference being that instead of the play or other "action" being silent, the sounds incidental to such "action," such as spoken lines, music, etc., are photographically recorded at the same time that the "action" itself is being photographed. It is universal practice to make the sound record on a marginal edge of the standard film. Thus, after the negative film has been exposed to both the "action" and its incidental sound, it is [fol. 120] developed and "positive" prints made therefrom, in the usual manner, and distributed through the usual channels for reproduction in the various theaters equipped with both sound reproducers and motion picture projectors.

Dr. DeForest, in his early investigation of the sound-on-film talking motion picture art, found that for some classes of work it would be necessary to treat the photographically recorded sound record of the *negative* film to a developing process different from that to which the picture or "action" record was subjected. In other words, to properly bring out the photographically recorded *sound* record to its most efficient intensity, the *sound* record would have to be developed to a point *beyond* which the *picture* record could be properly developed without clouding.

For example, sound records are photographically recorded by varying the intensity of a source of light by and in accordance with sound waves. Obviously, if the light were not of proper intensity to make a good record, the film would have to be "over developed" in the developing process to make it capable of "printing" on the positive. If, however, the *sound* record was on the same film as the *picture* record, "over developing" of the negative film would, of necessity, "over develop," and hence cloud, the photographed pictures on that film. Thus, the problem was presented to devise some means which would permit

the *picture* record and the *sound* record to each be developed independently of the other so that each might be brought, by the developing process, to its most efficient stage, and at the same time permit both the *sound* record and *picture* record to be ultimately located on the same positive film for projection.

The obvious solution of the problem thus presented, which solution constitutes the invention in issue, was to photograph the picture, and simultaneously therewith [fol. 121] photographically record the sound, on *separate* negative films so that the sound film can be developed independently of the picture film. Thus, each film can be developed as much or as little as its own characteristics necessitate, wholly independently and irrespective of the other. The positive film can then be obtained by printing from both the picture and sound negatives onto the single positive.

This invention of DeForest was disclosed in his patent application (the issued patent is involved in the interference) which disclosed an additional invention with which the present interference is not involved. This explains why claims 2 and 4 of the DeForest patent are not involved in the interference, as well as why the problem of the art, to which the invention of claims 1 and 3 was directed, is not set forth in any great detail.

The Counts of the Interference

The invention is expressed in the counts as a method of procedure. Count 1 sets forth the method in two steps—

(1) Photographing simultaneously upon separate films the picture and the sound; and

(2) Photographing the sound record on an unexposed portion of the picture film.

Thus the *picture* negative is printed onto the positive, and the *sound* record is printed on an unexposed portion of the positive. It will be understood, of course, that printing from a negative film onto a positive film is a photographic process.

Count 2 (claim 3 of the DeForest patent) differs from count 1 only in the added limitation of location of the

sound record, viz., between the marginal edge and the sprocket perforations of the positive film.

[fol. 122] DeForest's Proofs

Dr. DeForest began his intensive work in talking motion pictures in 1919 (Rec. p. 21). A study of the subject, as developed to that date, indicated to him that the problem of talking motion pictures could best be solved by photographically recording the sounds to be reproduced. He conceived three methods of photographically recording sounds on a sensitive film, such as a motion picture film. He worked intensively from 1919 to July, 1921, in an effort to find which of the three methods would be most satisfactory and practical. In July, 1921, he went to Germany to continue his work there. In his experimental work he early found that one of the most difficult problems to be solved was that of getting a sufficiently clear and sharp photographic image of the sounds being recorded. The trouble lay in the light source which translated the sound currents into light fluctuations for photographic recording. The light source, which he at that time employed, gave very faint and weak records, and he realized early in his work, even before he had a sound record of sufficient clarity to be commercially useful, that if the picture and sound records were taken on the same film there would be difficulty in developing the film so that both photographic records would be developed to their proper degree. The technique of *picture* recording on a film was, of course, highly developed, and it was easy and common practice to get clear, sharp *picture* images. Hence, the realization on the part of Dr. DeForest that if the fainter *sound* records were recorded on the same film with the clear *picture* records, when the film was sufficiently developed to bring out the fainter *sound* record, the *picture* record would be over-developed. On the other hand, if the *picture* record was properly developed, then the *sound* record would be under-developed. By December 26, 1920, Dr. DeForest, having realized this problem, [fol. 123] conceived the method of solving it. He made an entry in his notebook, which he kept during this period (DeForest Exhibit 1), as follows (Rec. p. 23):

"Too faint. Had to develop this film for six minutes. To get at all heavy track, this completely fogged it. *So that a picture would have been ruined.*" *

This entry clearly shows the realization that when a negative film, containing a combined picture and sound record, was properly developed to get a "heavy track" (sufficient clear sound record for reproduction), the film would have been fogged (over-developed) and the picture ruined.

During this period, because he was unable to get a sufficiently actinic light, Dr. DeForest had tried many types of films, such as X-ray film, Superspeed film, Panchromatic film, etc. (Rec. p. 24).

On December 28, 1920, two days after the first entry, the following entry was made in his notebook (Rec. p. 24):

"Developed this last 10 minutes until wholly fogged. This would be too long for cine pictures. *Hence will probably need to make two negatives (picture and sound) and print on the same pos.*"

The entry in the notebook, under the date of January 18, 1921, reads:

"Developed eleven minutes (very cold day); (longer development is best for sound film but not for picture. *Hence will probably use two films*)."

From these entries it is quite apparent that DeForest had a clear conception of the invention here in controversy, and that he recorded not only the problem, but its solution as well, in his contemporaneous notebook.

[fol. 124] Full corroboration of DeForest's work and the notebook entries is found in the testimony of William E. Garity, who was employed by the DeForest Radio Telephone & Telegraph Company during 1920 and 1921 (Rec. p. 56). Garity had his office in the same room in which Dr. DeForest was doing his experimental work, and assisted Dr. DeForest in this work. He was familiar with the work which Dr. DeForest was doing, and was conversant with the notebook records (DeForest Exhibits 1 and 2) at the time, Garity stated that he saw the entries quoted above on or about the dates under which they

---

* Italics in this brief are ours unless otherwise stated.

were recorded (Rec. p. 61). He testified that Dr. DeForest discussed with him he problem which arose in making the two records on the same film, during the holidays in 1920 (Rec. p. 60).

Adolph G. Senner also discussed this problem with Dr. DeForest (Rec. p. 80), and suggested a solution which Dr. DeForest rejected. The testimony of Senner, who worked for the film supply house of Herbert & Huesgen, demonstrates Dr. DeForest's activity in this work during this period. Herbert & Huesgen sold Dr. DeForest films and supplies, and developed the films which he was continuously bringing to them. Senner testified that Dr. DeForest disclosed to him the idea of using a separate picture film and a separate sound film in order that the difficulty in developing two records on the same film could be overcome (Rec. p. 80).

Dr. DeForest also testified (Rec. p. 25) that, as evidenced by his notebook (DeForest Exhibit 1), there were countless instances where he was having trouble in obtaining satisfactory photographic records of sound without overheavy—over-long-development of the negative, and consequent fogging thereof. As the first entry states, this fogging of the film would have ruined a picture record if there had been one on it. Dr. DeForest tried many de-[fol. 125] velopers and even had others develop his films to be sure that they were receiving proper treatment. An entry under date of April 6, 1921, in his notebook (DeForest Exhibit 1) reads:

"April 6th, second half of film developed by Dr. Mees at Eastman's. In appearance it is clearer (and cleaner!) than my half. These records reproduced quite noticeably better than those I developed. #3 is the best of the lot. Mees developed this record until it was quite fogged—too much for a picture film."

Thus, it is clear that even with expert developing the same problem was present, and hence, Dr. DeForest had clear proof of the necessity of overcoming the problem in some way. He clearly conceived the complete method for overcoming this problem on December 28, 1920, as the corroborated entry in his notebook proves. Dr. DeForest testified that he discussed the problem and its solution with Garity and Senner (Rec. p. 27). The testimony of these corrobo-

rating witnesses, uncontradicted in any respect, clearly and beyond a doubt establishes the conception of the invention at least by January 1, 1921.

Dr. DeForest did not reduce his invention to practice before the filing of his patent application on July 16, 1921. He was, however, devoting the major portion of his time, from December, 1920, until July, 1921, to the talking picture problem (Rec. p. 28). Indeed, Dr. DeForest worked Sundays and holidays on this problem (Rec. pp. 30, 62). Senner's testimony also shows, by the frequency with which Dr. DeForest brought supplies from, and had films developed by, Herbert & Huesgen, that he was very active in this work during this period.

Torma, another employee of Herbert & Huesgen, also testified that Dr. DeForest frequently brought in films, for development, having faint lines thereon when developed, [fol. 126] which he understood were photograhic sound records. This work was done for Dr. DeForest quite frequently up to about the middle of 1921 (Rec. p. 46). After development these films showed faint lines which sometimes vanished (Rec. p. 48).

On the Question of Reduction to Practice

DeForest did not reduce his invention to practice, prior to the filing of his patent application, for very obvious reasons.

(1) In the first place, the invention was not one which required reduction to practice to establish its practical utility. His entire line of research was directed, by Dr. DeForest, to produce *talking motion pictures.* The very name implies simultaneity of, and syncronism between, the "action" and its incidental sounds. *Motion picture* cameras were highly developed articles of commerce, in common use throughout the world. The *sound recorder,* and the various adjuncts thereof, were the things that Dr. DeForest was working on daily. The *simultaneous recording of sound and picture on the same film* might have required reduction to practice. Such a problem might present (and in fact did present) many problems of electro-mechanical nature which required numerous inventions by DeForest and other experimenters in

the art.* The use of *separate* films, one for the "action" and one for its incidental sound, is complete, insofar as its operability is concerned, on the mere statement of the [fol. 127] thought. DeForest's witness Garity pointed out (Rec. pp. 65-66) that there was no use in reducing the invention to practice at that stage of the experimental research, because the expense involved would be unnecessary in view of the fact that "it was concededly so simple." Indeed, as above stated, *the mere statement of the use of separate films for the sound and picture*, is all that was required to those skilled in the art to enable successful operation.

(2) A second, quite obvious reason why the invention was not reduced to practice, and required no reduction to practice, beyond the mere statement thereof, is that DeForest, in his intensive research of the entire problem of producing a commercially useful talking motion picture system, had not reached the "developing" stage in the system. It will be understood that when DeForest began his work to produce his "phonofilm" system he had nothing in the prior art to serve as a guide for his line of research, other than the scientifically established fact (established by the German scientist Ruhmer in 1904) that sound waves could be photographically recorded and reproduced. In other words, *he was creating a new art.* This necessitated a careful study of every step of the process, and of every mechanism used therein. He started at the beginning, and first developed a light source of sufficient actinic value and efficiency to be

---

*DeForest Patent No. 1,446,246 granted February 20, 1923.

Ries Patent No. 1,473,976 granted November 13, 1923.

DeForest Patent No. 1,482,119 granted January 29, 1924.

Ries Patent No. 1,607,480 granted November 16, 1926.

DeForest Patent No. 1,653,155 granted December 20, 1927.

DeForest Patent No. 1,693,071 granted November 27, 1928.

DeForest Patent No. 1,695,414 granted December 18, 1928.

DeForest Patent No. 1,695,415 granted December 18, 1928.

DeForest Patent No. 1,716,033 granted June 4, 1929.

able to photographically record sound waves of such character as to be susceptible of faithful reproduction in the projection and reproducing machines in the theaters. At the time the invention here in controversy was made, his research had not progressed beyond the investigation and determination of the best light source for recording. He did not even own a motion picture camera (Rec. p. 31). It obviously would have been, as Garity characterized it (Rec. pp. 65-66), "an unnecessary expense," at a time when he was subjected to continual and continuously increasing expense, [fol. 128] to buy a camera solely for the purpose of reducing to practice an invention of such character that the mere statement thereof establishes its utility and operability.

It is submitted, therefore, that the invention was one of the very few classes of invention which did not require a reduction to practice to establish its operability or utility. In the final analysis, that is all that a "reduction to practice" is for, in any event.

On the Question of Diligence

Likewise, it is submitted, there is no question of diligence involved in this case. All during the time with which we are here concerned, from December, 1920, until July, 1921, DeForest devoted the major portion of his time, including nights, Sundays and holidays, to intensive experimentation on his phonofilm" system. It is true, that after recording the problem and its solution, he did not devote any part of that time, for the reasons stated, to reducing the *present* invention to practice. That was not necessary. The problem had been encountered and noted, as well as its solution. Thus, another obstacle was out of the way, and when that stage of the system was reached in the research, progress would not then be stopped because of the obstacle, for its solution had been recorded. It will be remembered that Dr. DeForest did not have as his objective the mere solution of the particular problem which the invention here in controversy solved. His ultimate objective was to produce *a commercially useful sound-on-film talking motion picture system.* No one in the history of the world had ever produced such a thing. Unless and until such a system was produced, the invention here involved would have no utility of any kind or nature whatsoever. The invention here involved was

made purely *incidental* to the solution of the major problem, [fol. 129] which alone made the present invention valuable, and without which the present invention would be useless. Therefore, the undisputed diligence of DeForest on the *major* problem cannot but be credited as diligence on the part of DeForest in the present case.

There is no hard and fast rule established by this or any other Court on the question of diligence. Whether or not the inventor has been diligent, subsequent to his conception of an invention, is determined by the circumstances of the particular case.

As stated in Robinson on Patents, Vol. I, p. 548, Section 387:

"No general standard, by which diligence can be estimated, has been established by the law, nor, in the nature of things, is such a standard possible. It must be reasonable, under all the circumstances of the particular case in question. The character of the invention; the health, the means, the liberty of the inventor; *his occupation upon kindred or subordinate inventions*—are proper subjects for consideration. Such reasonable diligence does not involve uninterrupted effort, *nor the concentration of his entire energies upon the single enterprise.*"

Again, in McTammany v. Needham, 18 O. G. 1050, Commissioner Marvel (at p. 1051) said:

"Diligence in perfecting an invention is a relative matter and the law does not require that an inventor who is engaged in developing a number of improvements at the same time should devote all his time and energy to any one at the expense of the others."

See also Stapleton v. Kinney, 96 O. G. 1432.

Commissioner Leggett, in Chapman v. Candee, C. D. 1872, 190, 2 O. G. 245, stated:

[fol. 130] "Though the invention, in a narrow sense, was complete upon the completion of the dies, yet the dies were totally valueless until machinery could be constructed of the proper strength and form to use them. Whether such machinery to work dies of large size was practicable was not certain. Upon the determination of this point depended the question of whether the dies were worth patenting; hence

the time spent in constructing the machinery was used in such experimental tests as were wise and proper before applying for a patent (for the dies)."

So, in the present case, the invention forming the subject-matter of the present controversy would be of no utility whatever without a successful sound-on-film talking motion picture system. It logically follows, therefore, that DeForest's work on the completion of the system as a whole must inevitably be considered as diligence on his part in connection with the invention here in controversy, which was merely one of the many problems with which Dr. DeForest was confronted, and which he solved in connection with his research of the entire subject.

To this effect is the opinion of the Court of Appeals for the District of Columbia in Stapleton v. Kinney, supra, wherein Judge Sheppard, after quoting with approval from Commissioner Leggett's opinion, went on to say:

"It has also been held that under certain conditions some indulgence might be extended to an inventor who delayed a particular feature of a complicated machine while diligently engaged in developing another part of the same machine calculated to materially increase its usefulness and value. McCormick v. Cleal, 83 O. G. 1514; 12 App. D. C. 335, 341; Christiansen v. Ellis, 94 O. G. 2561."

The situation presented by the present case is even more impelling because it is not alone the matter of efficiency [fol. 131] which is involved, but also the more basic consideration of *utility for any purpose.*

It is submitted that the circumstances here are such that DeForest's diligence was unquestionable.

In fact, DeForest *did* purchase a camera from Herbert & Huesgen in February, 1921 (Rec. p. 36). Torma, an employee of Herbert & Huesgen, established that the motion picture camera was purchased by DeForest on February 18, 1921 (Rec. p. 49; see also Stipulation, Rec. p. 55).

Senner, employed by Herbert & Huesgen in 1920 and 1921 (Rec. p. 77), was the one who handled the transaction of selling the camera to Dr. DeForest, as well as film and other equipment (Rec. pp. 77 and 78). He testified (Rec. p. 79), that after the purchase of the camera, Dr.

DeForest brought in films, having both pictures and sound records thereon, for development. Under vigorous cross examination this testimony was not shaken. Senner was not clear as to the exact date when these films, having both sound and picture records thereon, were brought in for development. He was positive, however, that it was a short time after the purchase of the camera in February, 1921, and certainly before April 14, 1921.

Thus it is established, by a disinterested witness, that DeForest had reduced the invention to practice very shortly after he acquired the camera, although it was impossible to definitely fix the time. It was certainly, however, before the effective date of Vogt et al. In any event, and notwithstanding the enormous expense to which DeForest was subjected in his research, he disclosed the invention to his patent attorney at least as early as June 30, 1921, for the purpose of filing his patent application, which matured into the patent involved in this interference (Stipulation, Rec. p. 89).

The DeForest notebooks (Exhibits 1 and 2) are eloquent proofs of DeForest's continued activity between the date of his conception and his filing date.

[fol. 132] Summary

It is submitted, therefore, that DeForest has conclusively established conception of the invention at least as early as January 18, 1921, which date is earlier than the record date of Vogt et al., to which they are restricted (April 14, 1921). Therefore, DeForest was the first to conceive the invention. The nature of the invention made actual reduction to practice unnecessary, and the short period of time which elapsed between the recorded, corroborated conception, and the commencement of the preparation of the patent application, all establish, we submit, that priority of invention should have been awarded to DeForest, and that the action of the Patent Office Tribunals, awarding priority to the German inventors, was a most obvious error that should be corrected by this Court.

The Fundamental Error of the Patent Office Tribunals

The question inevitably arises—why did the Patent Office Tribunals fail to award priority of invention to DeForest?

The answer is that they committed a fundamental error in the interpretation of the counts involved in the interference.

While not questioning either the authenticity of DeForest's notebook records, the corroboration thereof, or any of the facts testified to by DeForest and his corroborating witnesses, the Patent Office Tribunals pointed out that both counts recite that the picture and sound must be *simultaneously* photographed on separate films. They thereafter note the fact that nowhere in the three DeForest notebook entries is the statement made that DeForest contemplated recording the picture and its incidental sound [fol. 133] *simultaneously*. Hence, they held, DeForest had not discharged the burden of proof which he carried.

In support of their viewpoint, the Patent Office Tribunals cite the Greensfelder patent No. 1,254,684 (Rec. p. 90).

There are three separate and complete answers to the position assumed by the Patent Office Tribunals, either of which, and certainly all of them, establish the fundamental error of their ruling.

(1) In the first place, the Patent Office Tribunals completely close their eyes and their minds to the fundamental fact that all of DeForest's work was directed to the problem of producing *talking motion pictures*. It is impossible to conceive the recording of an "action" and its *incidental sounds* unless they are recorded *simultaneously*. To use an extreme illustration, how absurd it would be to depict in a theater the moving pictures of a man, whose actions and lips portray a proposal of marriage, while the sounds emanating from the sound reproducer are those incident to a prize fight. The very name "talking-motion-pictures" is opposed to the position of the Patent Office Tribunals. Its name implies pictures *and* their incidental sound.

The fact that the DeForest patent states on its face (in the claims forming the counts of the interference) that the invention is directed to *talking-motion pictures*, refutes the absurd viewpoint of the Patent Office. The fact that DeForest's entire testimony, as well as his entire work, was directed to producing *talking-motion-pictures*, likewise refutes the absurd viewpoint of the Patent Office.

The Greensfelder patent No. 1,254,684, reference to which is made in the opinion of the Patent Office Tribunals, does

not disclose what the Patent Office tribunals assumed is disclosed thereby. Greensfelder does not disclose, in any sense, the photographic recording of sounds of any par- [fol. 134] ticular action, but merely the *marking* on a film of *control* records. For example, if a picture depicts the firing of a gun, a mark is made on the film which would effect the operation of a device simulating the firing of a gun. The Greensfelder patent does not contemplate *combined sound and picture* with *all* of the sounds incident to the picture including voice, music, etc. Thus, the Patent Office tribunals have based their opinion on a mere unwarranted assumption which, in turn, is based on a fundamentally erroneous premise. There is no *photographing of sound waves* in the Greensfelder patent, as asserted by the Patent Office tribunals, and which would be necessary in order to make their contention with respect thereto even plausible. Greensfelder does not even contemplate photographically recording sound. He artificially produces what he refers to as "sound marks" which are utilized to control sound producing devices of an orchestra, for example, as distinguished from *reproduction* of the music *originally* rendered by the orchestra.

It is submitted, therefore, that there is no justification in theory or fact, for the position taken by the Patent Office Tribunals, and that they committed a most obvious error, and should be reversed.

(2) In the next place, even though the DeForest notebook entries did not, in and of themselves, use the word "simultaneously," the testimony of DeForest, and that of his corroborating witnesses, explain the entries of the notebook, and bring out the most obvious fact (were it necessary to be brought out), that *simultaneity of photographic recording of the picture and its incidental sound* was the only thing that DeForest had ever contemplated or worked on. Obviously, when DeForest's original conception was the recording of sound and picture *on the one film*, it would be impossible to record them in any way other than simultaneously. There certainly was no logical [fol. 135] justification for the Patent Office Tribunals completely ignoring the undisputed testimony of Dr. DeForest and Garity to this effect.

(3) Finally, the DeForest notebook entries here relied upon are substantially the same, in character of expres-

sion, as that portion of the German application of Vogt et al. on which they rely to establish a record date prior to Deforest's filing date.

In the German application appears the following (Rec. p. 104):

"Now, according to the invention this difficulty is obviated by that for the production of the negatives either entirely distinct films are used, or else films which, while still united during the recording work, are severed prior to development. Synchronism in either case is insured by the perforations or else by corresponding datum marks."

If the foregoing statement, appearing in the German application of Vogt et al. constitutes disclosure of the invention here in controversy, it certainly does not do so to any greater extent than do the entries in the DeForest notebooks. No mention of the word "simultaneously" appears in the disclosure.

We do not dispute, and never have disputed (and this is the reason why the motion to shift the burden of proof was not opposed), that to the reasonable mind the disclosure in the German application would mean that the picture and its *incidental sound* can be recorded on the same negative, and then, as the German specification states, "severed" thereafter, so that the sound portion and the picture portion can be separately developed. Or, in the alternative, entirely distinct films can be used. When we turn to the DeForest notebook entries and apply the same rule of reason and common sense to the language [fol. 136] therein found, the same conclusion is inevitable. The entry of December 26, 1920 (Rec. p. 23), is

"Too faint. Had to develop this film for 6 minutes to get at all heavy track, this completely fogged it. *So a picture would have been ruined.*"

What could the italicized statement refer to other than, as Dr. DeForest and Garity explain, that if a picture had been on the same film with the sound record, as was contemplated, the development of the film, to properly bring out the sound record, would have ruined the picture record? What reason in the world would have existed for DeForest having a picture record and a sound record on the same film, unless—as testified to by him, as established by the

entire record in the case, as incontrovertibly proven by the ultimate objective of his entire line of research—he was desirous of producing talking-motion-pictures—"actions" with their incidental sounds simultaneously recorded for purposes of simultaneous reproduction?

Applying the same test to the entry of December 8, 1920, which reads (Rec. p. 25):

"Developed this last 10 minutes until well fogged. This would be too long for cine picture. *Hence, will probably need to make 2 negatives (picture and sound) and print on same pos.*"

We advance as utterly absurd any interpretation of this entry other than what it plainly says, viz., for the reasons stated, that the proper development of the sound record would be too long for the picture record *simultaneously recorded on the same film.* Hence, it would be necessary to make two negatives, one for the picture and one for its sound, and print the same on a single positive.

[fol. 137] Finally, the entry of January 18, 1921 reads (Rec. p. 25):

"Developed 11 minutes (very cold day) (longer development is best for sound film but not for picture. *Hence, will probably use 2 films*)"

Here, again, simultaneity of recording the picture and its incidental sound is the only reasonable, intelligible meaning of this entry.

Thus, it will be seen that if the DeForest entries do not establish complete written records of the conception of the invention here involved, then the inevitable conclusion is that neither does the German specification of Vogt et al., and the German inventors are not entitled to the filing date of their German application. Therefore, they would be restricted to the filing date of their United States application, which, being subsequent to the filing date of DeForest's application, would result, as a matter of law, in the award of priority of invention to DeForest.

Stated another way (and we believe it is the more reasonable of the two), if the disclosure in the German application of Vogt et al. is sufficient to support the counts of this interference, then DeForest has incontrovertibly established, by contemporaneous written records, conception

of the invention at least as early as January 18, 1921 (which is earlier than any date available to Vogt et al.). Under the particular circumstances of the case, with reference to diligence, reduction to practice, etc., DeForest is the prior inventor, and the award of priority should have been made to him. The Patent Office Tribunals, because of their failure so to do, have committed error.

[fol. 138] Conclusion

The Board of Appeals of the Patent Office should be reversed, and priority of invention awarded to DeForest.

Respectfully submitted, Charles M. Thomas, Samuel E. Darby, Jr., Louis D. Fletcher, Counsel for DeForest.

Dated New York, N. Y., January 26, 1931.

[fol. 139] [Stamp:] United States Court of Customs & Patent Appeals. Filed Apr. 18, 1931. Arthur B. Shelton, Clerk.

Patent Calendar No. 241. Oct. Term, 1930

IN THE UNITED STATES COURT OF CUSTOMS AND PATENT APPEALS

Patent Appeal Docket

No. 2,749

Interference No. 53,103

LEE DEFOREST

vs.

VOGT, MASSOLLE AND ENGL

Brief for Vogt, Massolle and Engl

Kenneth S. Neal, Attorney for Vogt, Massolle and Engl. S. Mortimer Ward, Jr., of Counsel.

[fol. 140] INDEX

	Page
Introduction	113
The Invention	114
Preliminary Statement Dates	116

Dates Sought to be Established by Record 116
Brief Outline of the Case 116
Contentions of Vogt et al. with the Rulings of the Examiner of Interferences and the Board of Appeals Sustaining Each of Them 119
Discussion of the Disclosures in the Specifications of the Two Parties 123
DeForest's Contention that Senior Parties' German Application Does Not Disclose Simultaneity in Recording Sound and Pictures 127
First Contention of Appellees 129
Second Contention of Appellees 136
Third Contention of Appellees 145
Authorities 155
Phil vs. Mersman 156
Feinberg vs. Cowan 156
Storer vs. Barr 156
Beidler vs. Caps 157
Jardine vs. Hartog 157
Reply to DeForest's Brief 158
Submitted 163

[fol. 141] IN THE UNITED STATES COURT OF CUSTOMS AND PATENT APPEALS

Patent Appeal Docket

No. 2,749

Interference No. 53,103

LE DEFOREST

vs.

VOGT, MASSOLLE AND ENGL

BRIEF FOR VOGT ET AL., APPELLEES

INTRODUCTION

This is an appeal by DeForest, the junior party, from the decision of the Board of Appeals of the Patent Office, affirming the decision of the Examiner of Interferences on final hearing, awarding priority of invention to Vogt et al. The concurrent decisions of the Patent Office upheld each of the three grounds advanced by the senior

parties as to why priority should be awarded to them. These grounds will be discussed later.

[fol. 142] The Invention

The invention at issue relates to a method of producing talking motion picture film. The DeForest patent is owned by the DeForest Phonofilm Corporation, and the application of Vogt et al., is owned by American Tri-Ergon Corporation, a company controlled by Mr. William Fox.

The two counts of the issue are:

1. The method of producing talking moving pictures on the same film which comprises photographing *simultaneously* upon separate films the picture and sound, and photographing the sound record on an unexposed portion of the picture film.

2. The method of producing talking moving pictures on the same film which comprises photographing *simultaneously* upon separate films the picture and the sound, and photographing the sound record on an unexposed portion of the picture film between the marginal edge and the sprocket perforations thereof.

It will be observed that the invention at issue is not one (1) merely for the recording of sound on film, nor (2) merely for the recording of pictures on film, nor both on the same film, nor (3) merely for recording sound and pictures on separate films so as to be able to develop them separately and then project them together, nor (4) merely for printing sound and pictures from separate negatives upon a single film. Each of these ideas, separately and collectively, was old prior to the conception date of either party, neither of which goes back of 1921. There are issued patents of record describing each of these four ideas, and [fol. 143] each was a well recognized part of the art prior to the date of either party to this interference. This cannot be disputed. See for example, Greensfelder, No. 1,254,684 (starting R., p. 96, line 92, and R., p. 98, lines 13 and 128). See also in addition DeForest's patent No. 1,446,246, filed in 1918, for the recording of sound.

---

* Italics in this brief ours, unless otherwise indicated.

The invention at issue deals with the coordination of the *recording* of the sound and pictures upon separate film and the *coordination* of the *re-recording* of these records, as upon a single film. More specifically, the invention resides in recording the sound and pictures *simultaneously* upon separate film (negatives) and then photographing the records on these negatives upon a third film to produce a combined sound and picture film.

Motion picture film made according to the method at issue enables one to solve various problems arising in the production of such film. Among these are:

First, by recording the sound and pictures on separate films *simultaneously*, one solves the problem of difficulties arising from lack of proper timing or register of the sound with the picture in the taking thereof.

Secondly, since the light and other conditions in the recording of the sound and the pictures are different, it is advisable to adopt different means with respect to the sound and picture negatives in order to get the best results. By recording the sound and pictures on different negatives one can use different types of emulsions or sensitized surfaces on the two films and/or different developers and/or different periods of development with the same developer. This is set forth in the Vogt, et al., application, but not in the DeForest patent.

Thirdly, the method at issue enables one to take the sound record on a larger scale so as to get a better tone quality and then reproduce it in reduced dimension upon the final com- [fol. 144] bined film for the picture an sound. This is disclosed in the DeForest patent but not in the Vogt application.

Fourthly, by photographing upon a common film the sound and picture records thus taken on separate film, one gets the sound and pictures permanently in the proper timed relation or register, so that the assurance of obtaining this necessary relation is no longer dependent upon the proper operation in movie houses for the synchronizing mechanism.

[fol. 145] Preliminary Statement Dates

	Vogt et al.	DeForest
Conception and disclosure	.....	About Jan. 1, 1921 (not the invention at issue)
Reduction to practice	Limited by law to April 14, 1921, filing date foreign appln.	Jan. 15, 1921 (willfully false statement)
Effective application date	.....	July 16, 1921

Dates Sought to be Established by Record

Conception and disclosure	.....	Dec. 28, 1920 (not the invention at issue) June 30, 1921 (established by DeForest's memo. to Darby, Exh. 4)
Reduction to practice	Limited as above	Admits none even tried
Application filed	.....	July 16, 1921

[fol. 146] Brief Outline of the Case

Vogt et al are restricted by law to the filing date of their correspo-ding German application—April 14, 1921—for conception and reduction to practice so took no testimony. DeForest did not file until July 16, 1921, three months thereafter, and six and a half months after his claim conception date, during which time he admits that he neither made nor attempted any reduction to practice of the invention, and his own proofs show that during the latter part of this period, he was making talking picture films by a different method, i. e., having the sound and the pictures

photographed on the same film which were not separated but developed together, and for this reason were not satisfactory. This is significant when we come to consider DeForest's argument that one reason that he did not reduce to practice, was that he was busy working on the feature of recording sound and therefore did not get around to work on the combined records.

DeForest's proofs consist of four notebook entries by him between December 26, 1920 and April 6, 1921. He produced one witness, Garity, in an attempt to corroborate those entries. No other witness was questioned with regard to them. Our first contention is that these entries fail to disclose the invention at issue, and our second contention is that, assuming (but only for the sake of this argument) that the entries do disclose the invention, that the testimony of Garity fails to corroborate that these entries were made prior to the senior parties' date of April 14, 1921, and therefore a disclosure by these notes, whatever it may be, has not been established early enough. DeForest also testified that he had discussed his problems orally with one Senner at some date which he does not attempt to fix, and he does not state that he disclosed the invention here at issue to Senner. Senner testified that De Forest discussed [fol. 147] with him film development problems, but his testimony fails to establish a disclosure of the invention at issue. Furthermore, even if for the sake of this argument, but only for that purpose, it is assumed that Senner did receive a disclosure of the invention, his testimony fails to establish it as prior to April 14, 1921, the senior parties' date. He had no record to show the date of the conversation or conversations and the best he could say was that he was satisfied from "nothing but my memory" that the conversation was "within a week or ten days of the purchase of the camera"—meaning after the purchase of the camera —this being a camera that DeForest had purchased on February 28, 1921. This conversation between Senner and DeForest, seven years before the testimony, was a mere passing event in the course of Senner's business with another concern, and cannot establish disclosure as prior to the critical date of April 14, 1921. It is therefore a part of our first contention that DeForest's disclosure to Senner was not a disclosure of the invention at issue, and it is a part of our second contention above, that even if it could be held to be a disclosure, it has not been proven

as prior to the date of the senior parties. This constitutes DeForest's entire case.

Our third contention is that DeForest was totally lacking in diligence from the date of his alleged conception to his filing date, a period of 6½ months, during which time, if he ever had a conception of the invention, he had abandoned it in favor of a different process which he did use during the latter part of this period—some time after he purchased the camera—and that when he filed his patent application the filing of it was not an act in continuity of his alleged conception idea, i. e., with a view of solving the problem of development of sound and picture films, but that when he filed that application it was for an entirely different idea, i. e., for the idea of taking an enlarged sound record on one film and the picture record on another, and then printing the sound record in a reduced [fol. 148] size on the same film with the picture record, with the sole purpose in mind of improving the sound record by taking it enlarged and then reducing it. When he filed his application it was wholly silent on any discussion of the development of films much less of any problem in the development where the picture and sound are taken on the same film and developed together or on any solution of the problem.

It is by the merest chance that the language of the claims made in the DeForest patent happen to be so broad as to read upon the invention of the senior parties. This point is important in considering the question of diligence because DeForest is not in the position of a party who having conceived of a certain problem and its solution and after working upon it for a few months, although he never reduced it to practice, proceeded to perpeuate his idea by the filing of an application dealing with that problem and its solution. In his case, if he ever had a prior disclosure of the invention at issue he had completely turned his back on it. His own proofs show that he had the two necessary cameras to take the sound and picture records simultaneously on different films, and that all he needed to reduce the invention to practice, if he ever had any idea of it, was to have a mechanic connect the two cameras and that "a mechanic could do it in a day." But it was not attempted. He continued the old method.

Contentions of Vogt et al. with the Rulings of the Examiner of Interferences and the Board of Appeals Sustaining Each of Them

1. That assuming (but only for the purpose of this first contention) that DeForest's notebook pencil entry under date of December 28, 1920 (made at the very bottom of the page and the only entry that even remotely approximates the invention), was made as of the date alleged, and [fol. 149] is genuine; both this entry and the testimony of DeForest and his witnesses with respect to his disclosures to them of the subject matter of this entry, fall short of a disclosure of the issue. The problem and its solution set forth in this pencil entry and the testimony of the witnesses (Garity and Senner) affirming a disclosure of DeForest to them of this problem and its solution, fall short of a disclosure of the issue and relate to a radically different problem and solution thereof from that set forth in the written DeForest memorandum upon which his application was based and which Mr. Darby testifies was submitted to him by DeForest on June 30, 1921. The earliest disclosure of the invention established by DeForest is June 30, 1921—the date of said written memorandum and sketches presented to his attorney, Mr. Darby. This disclosure is a radically different one from that in the notebook or that testified to by DeForest and his witnesses, and it is based on quite a different proporsition from anything in said notebook or from anything that DeForest or his witnesses testified about. This being true, Vogt et al. must win as being the first to disclose and the first to reduce to practice.

The Examiner sustained this contention, stating—

"The invention has been patented to the party DeForest. Vogt, et al., copied the two counts from the DeForest patent but they were rejected by the primary examiner. The rejection was reversed by the Examiners-in-Chief and in their opinion they mentioned the word 'simultaneously' occurring in both claims as distinguishing these claims from the Greensfelder patent cited. Under the circumstances the *usual rule in interferences* that each limitation of the claims is to be deemed essential has particular force."

* * * * * * *

[fol. 150] "The testimony submitted by DeForest fails to prove that he had conceived this feature of simultaneously photographing the picture and the sound prior to his filing date. The notes in the DeForest notebook relied upon do not include this feature, and the corroborating witnesses do not support DeForest with respect to this feature of simultaneity" (R., p. 106).

The Board of Appeals in affirming on this point stated:

"While the simultaneous exposure of the sound and picture negatives would seem to be the most obvious procedure, the brief of Engl et al. points out that other methods were known prior to DeForest's alleged conception (see Engl et al. brief, pp. 24 and 25) and appear to be disclosed in the patent to Greensfelder, No. 1,254,684, which was cited in the application of Engl et al. and the burden was on DeForest, as the junior party, to prove his case" (R., p. 111).

2. That said entry of December 28, 1920, as the means of fixing DeForest's date of disclosure as of said date, as distinguished from a date of say April 16th, which would be after the effective application of Vogt et al.—even if the entry had been a disclosure of the invention—has not, in the light of the testimony and the circumstances of this case, been proven with that degree of certainty required, and must be viewed with grave suspicion, as will more fully appear. If the date of this notebook entry has not been established with reasonable certainty—and we submit it has not been—then there is no testimony which definitely fixes even any alleged disclosure by DeForest of the invention at issue as prior to the date of Vogt et al., and, therefore, the latter must win.

The Examiner sustained this contention, stating:

[fol. 151] "Furthermore, these corroborating witnesses had no means of fixing the date.

"Garity knows that DeForest kept a running notebook with which he was conversant in a general way, and he recognizes the two notebooks put into evidence (X Q 41, p. 63). He states, however, in answer to X Q 40, page 63, that he is not able to say that a particular record was made on a certain date, his memory not going back so far. The notes purport to have been made December, 1920, and January and April, 1921. Vogt et al., having a filing date under

the International Convention of April 14, 1921, cannot be considered as anticipated by this testimony by Garity.

"The witness Senner likewise has no way of fixing any date prior to the filing date of Vogt et al. DeForest purchased from Senner's employer on February 18, 1921, a camera, and Senner is of the impression that it was within a week or ten days after this purchase that DeForest talked with him about producing talking motion pictures. The dates here are so close, however, that the impression of the witness is not sufficiently reliable to overcome the record date of Vogt et al.

"It is also true that the testimony of neither of these witnesses includes the feature of simultaneity."

The Board of Appeals in sustaining the Examiner on this point, stated, "Furthermore, he must rely for corroboration upon his witnesses Garity and Senner." The Board then reviewed the testimony substantially as outlined above by the Examiner and concluded on this point as follows:

"DeForest says (X Q 74) that it was several weeks after he got the camera before he had the necessary attachment placed on same for recording sound on the same film with the picture. We must, therefore, agree with the Examiner [fol. 152] of Interferences that DeForest has failed to establish conception of the invention in issue prior to the constructive reduction to practice of the senior party" (R., p. 112).

3. That assuming (but only for this third contention) that DeForest has proved a disclosure of the invention as of January 1, 1921, he was utterly lacking in diligence from said date of conception to the filing of his application. (He admits that he never attempted to reduce to practice, and his assistant testified that the only thing DeForest lacked in the way of apparatus for effecting a reduction to practice—a connecting shaft—could have been supplied by a mechanic in one day, all other means for it being in his possession.) The record shows that in fact DeForest completely neglected or abandoned the idea of this invention, as one of his consultants testified he advised him to do, for other and simpler processes supposedly equally as good. DeForest, admittedly having made absolutely no effort to reduce the invention to practice, although all the facilities for so doing were available to him, but preferring to pro-

duce his motion pictures by another method, he must lose on this ground alone, independent of the others.

The Examiner sustained this contention, stating:

"DeForest being admittedly the last to reduce to practice, his reduction to practice consisting of the filing of his application, July 16, 1921, he could in any event prevail only if he established diligence between the German filing date of the other party and his own filing date. The German filing, as already stated, was April 14, 1921, so that DeForest would have the duty of proving diligence during this interval of three months.

"It is not urged upon DeForest's behalf that he was doing anything with the present invention from Vogt et al.'s record date until he submitted to his patent counsel, on [fol. 153] June 30, 1921, the data for his application. According to the testimony of his assistant Garity an actual reduction to practice would have been made without difficulty.

"It is the contention on behalf of DeForest that he was working on the problem of recording sound, and should be credited with diligence upon the basis of this activity. But this work does not amount to diligence in reducing to practice an invention involving the combination of sound and pictures. There are authorities to the effect that diligence on the whole machine may be considered as diligence toward the elements of such machine, but the present case is not of that class and DeForest can not be credited with diligence for one invention upon the basis of what he was doing toward an independent, even if related, invention. On the ground that DeForest has established no date earlier than the record date of Vogt et al. and on the further ground that he was not diligent during the three months between Vogt et al.'s filing date and his own filing date, it is ruled that Vogt et al., are the first inventors."

The Board of Appeals in affirming on this point, stated:

"Even if DeForest were given a conception as of January 1, 1921, the date set up in his preliminary statement, he would have to prove diligence from just prior to April 14, 1921, when Engl et al. entered the field, up to his filing date of July 16, 1921. There is no testimony which clearly establishes any work done on the invention in issue from January 1, 1921, up to April 14, 1921, and DeForest seeks to

rely upon his work on the general subject of talking moving pictures. This work was the subject of the other interference No. 51,947, and the present invention relates to entirely [fol. 154] different subject matter. His note books show that he had already obtained good results in making sound records and after obtaining the moving picture camera on February 18, 1921, he could have coupled the two cameras without great difficulty and reduced the invention to practice, but on page 13 of his record (Q. 25) he admits that he had not attempted to actually use the invention of the interference prior to filing his application on July 16, 1921. This is also verified by the testimony of Garity on page 41, Q. 20, page 47, X Q. 52, and page 48, X Q. 55.

"DeForest has failed to prove conception prior to his filing date and even if he had he has not established the diligence required of him" (R., pp. 112-13).

It is well settled that the concurrent decisions of the Patent Office will not be disturbed by this Court unless manifestly erroneous. Jardine vs. Hartog, 36 F. R. (2nd), page 606; Beidler vs. Caps et al., 36 F. R. (2nd), page 122.

Discussion of the Disclosures in the Specifications of the Two Parties

It will assist in a more ready understanding of the situation here presented if we first consider the differences in the disclosures of the two specifications, i. e., the differences in the problems which the parties state it is the object of their invention to overcome.

Vogt et al. point out in their specification that it is of great advantage in the production of talking movie film to have the sound and pictures recorded on the same film (this for assuring proper register in the theatres after the film is produced), but they point out that the lighting conditions in the recording of pictures are different from those in the recording of sound, resulting in relative under or over [fol. 155] exposure of one with respect to the other or of parts of the picture record with respect to the sound record (for example, part of the picture may be over-exposed with respect to the other parts, or the entire picture may be over-exposed due to brighter light with respect to the sound record, or due to a less actinic light used in recording sound or vice versa). They point out that this difficulty cannot be

taken care of in developing the negative where both sound and picture records have to be subjected to the same development treatment, as where they are taken on the same film with no opportunity to develop one separate from the other. They point out that the difficulty can be overcome by taking the sound and picture records simultaneously on separate films (as by having them connected during the photographing) and then separating them and developing them separately, giving each one the proper treatment it requires to obtain in each case a negative of the desired quality, and thereafter re-recording the sound and pictures from these two negatives thus developed, onto a third or positive film. Their disclosure as to the simultaneous making or production of the two negatives, the picture and sound negatives, i. e., the simultaneous recording of the sound and pictures, is plainly set forth in their United States application as filed, as follows:

"According to the present invention the difficulty is overcome by either employing *entirely separate films* for the *production of the negatives* or films which are *connected during the photographing,* but which are separated from one another before the developing.

"*The synchronism is assured in both cases* by the perforations and by corresponding marks" (R., p. 4).

Identically the same disclosure is also found in their German application of April 14, 1921, upon which they rely for their effective date, i. e.,

[fol. 156] "Now, according to the invention this difficulty is obviated by that for the *production of the negatives* either *entirely distinct films* are used, or else films which, *while still united during the recording work,* are severed prior to development. *Synchronism in either case is insured* by the perforations or else by corresponding datum marks" (R., p. 104).

They thus clearly disclose in both applications the idea of *simultaneously* recording the sound and pictures on separate negatives and the importance of the separate development of these negatives for the purpose of overcoming the different degrees of exposure to be encountered, and then the re-recording of these negatives on the positive film.

Contrasted with this disclosure we find in the DeForest patent a disclosure as follows: After a large number of nebulous paragraphs as to the objects of his invention, which say nothing specific, he then states commencing page 1, line 57, that he finds that if the record of the sound is made relatively large so that the maximum amplitude of the photograph track is say a half inch or more, "a more exact and faithful photograph containing any details of the finest light variations produced by sound waves will be obtained." He then goes on to state, however, that while the large record is good for merely producing sound, it is obvious that a record of this size cannot be used in connection with motion picture film unless separate films are used involving the problems of synchronism for reproduction, which he says have always been and still are considered to be objectionable problems in this art. He then states:

"In accordance with my invention, however, I produced the large, accurate and definite sound record on a film, for example, as shown in Fig. 1, and therewith reduce photo- [fol. 157] graphically the record thus obtained and print the same on one or both marginal edges of the motion picture film as shown in Fig. 2."

Further, on page 2, commencing at line 11, he points out that by means of this arrangement it will be apparent that the large distinct sound record may be accurately reproduced in smaller dimensions but in complete detail on the motion picture film.

The patent is wholly silent as to any reference to difficulties with respect to the relative exposures of sound and picture, and as to any suggestion of obtaining any advantages by separate development treatments to overcome any such trouble. It is important to bear this in mind when we come to consider the subject matter of DeForest's first alleged disclosure, which consists entirely of a statement with respect to development troubles accompanied by the suggestion of overcoming the same by printing on separate negatives. This was a part of the idea set forth in the Vogt et al. application and in their corresponding foreign patents, some of which, for example, the German and French patents, having issued as early as February, 1923 (German patent No. 368,383 and French patent No. 549,728), long prior to the date of DeForest's preliminary statement which was executed in December, 1925.

It will also be interesting in this connection to bear in mind that the DeForest description—DeForest Exhibit 4—which he furnished to his patent attorney on June 30, 1921, for the purpose of preparing his patent in interference, is likewise wholly silent on any suggestion as to relative degrees of exposure of picture and sound records and as to separate developing of the same to overcome this trouble.

In view of the radical difference in the disclosures of the specifications of the two parties, it will also perhaps be advisable to briefly review the way in which this interference came about.

[fol. 158] Vogt et al., upon observing the claims granted to DeForest in his patent, considered that the claims 1 and 2 of the DeForest patent were so broad in their terms that DeForest might contend that they were readable upon the method described in the Vogt et al. application, and that a court might so hold. Although Vogt et al. realized the difference in the two disclosures they felt that for this reason an interference should be declared to avoid future irreparable injury.

On the other hand, it was argued before the Primary Examiner that if the interference was declared DeForest was at liberty to bring a motion to dissolve on the ground that his claims should be so interpreted as not to read on the disclosure of Vogt et al., and that if he brought such a motion then he would forever thereafter be estopped from contending for a broader interpretation of his claims such as to cover the method of Vogt et al., in which case the latter would be protected. Vogt et al. did not contend that the DeForest claims must be interpreted so as to read upon their method. They contended that they were susceptible to this interpretation, and that they should be given the benefit of the doubt by having the interference declared.

The Primary Examiner refused to allow the two DeForest claims to Vogt et al., but on appeal the Board did allow them, holding that they could and should be interpreted so as to read on the disclosure of Vogt et al.

DeForest has not made a motion to dissolve on the ground that the claims should not be construed so as to be read upon the disclosure of Vogt et al. Therefore, by his silence under these circumstances, he contends that they must be given such an interpretation as to read upon the disclosures of both of the parties; and in his brief before the Examiner of Interferences he made this assertion.

One of the suspicious features of DeForest's case is that while his sketch to Mr. Darby of June 30th and his entire patent specification deal only with the problems of using [fol. 159] separate films for sound and picture for the purpose of taking an enlarged sound record and then reducing the latter as printed on the picture film, and indeed deal with the taking of the enlarged sound record and reducing it in one dimension regardless of whether or not it is in conjunction with a picture, and while neither this memorandum of DeForest's nor the specification make any reference to problems in development being a feature that DeForest sought to overcome by his invention; yet DeForest proceeds to present proofs in the way of pencil entries in his famous notebooks setting forth just these problems with respect to development of film, and seeks to predicate a disclosure on these as of a date earlier than Vogt et al., and notwithstanding the fact that his application was really predicated, as stated, on an entirely different idea.

DeForest's Contention that Senior Parties' German Application Does Not Disclose Simultaneity in Recording Sound and Pictures

This is an eleventh hour contention of DeForest's after he was defeated before the Examiner of Interferences and it is wholly without merit. He raised this point first before the Board, contending that if the claims at issue are to be limited to simultaneous recording of the sound and picture, then the senior parties are not entitled to their German filing date because that application did not disclose this feature.

In the first place, the German application—see the pertinent quotation above—does fully disclose this idea, and secondly, the disclosure so far as concerns this point, is precisely that of their United States application, and DeForest is estopped at this time from raising any question about it. Taking up the last point first, as the record shows, Vogt et al., within the thirty days allowed under the rules for bringing motions, duly filed their motion to shift the bur- [fol. 160] den of proof based on their German application, a copy of which was filed in the Patent Office. This motion was not opposed and the burden was shifted. DeForest having failed to oppose that motion, is now estopped from contending that that application does not disclose the lan-

guage of the issues. Furthermore, as will be seen from a mere reading of the above pertinent quotations from the United States application and the German application, the two cannot be distinguished on this point and therefore DeForest's contention is tantamount to a contention that the senior parties' U. S. application does not disclose the invention, but he is estopped at this late date from making that contention (Rule 130), since the same should have been made within the thirty-day motion period under Rule 122 of the Patent Office.

As to the merits of the contention, it will be seen from the above quotation from the German application, that it is stated that in the making of the negatives of the two records, either entirely separate films may be used or films which are united during the recording. Obviously, if the negative films are united during the recording, the sound and picture records must of necessity have been taken thereon simultaneously because there would be no opportunity for making a talking motion picture by the only other method known, i. e., "scoring" the sound to the picture. To do that one must first take the picture negative, develop and project it, and then make the negative of the sound record, "scoring" it to the picture during the projection of the picture, so as to get a negative of the sound, which can then be developed and the picture and the sound records then printed on one positive. Furthermore, the statement in the German case is that whether the films are entirely separate or united during the taking of the negative, "*synchronism* in both cases is insured" by perforations, etc. It is impossible to have synchronism in the taking ex- [fol. 161] cept by simultaneous taking. The word "synchronism" here requires simultaneous taking and nothing short of it. Webster's Dictionary defines "synchronism" as follows: "(1) The concurrence of events in time; *simultaneousness.*" The Board as to this contention, held:

"In our opinion the statements that the films are still united during the recording indicates that the record is made simultaneously on both films and this is further borne out by the statement that, when separated for development purposes, the *synchronization* is insured by perforations and suitable marks so that they can be reconnected with proper registration. The same disclosure is found in the U. S. application of Engl et al." (R., p. 111).

First Contention

Notebook entries and testimony with respect to the subject matter thereof, do not disclose the invention at issue.

It will be noted from the counts of the issue that each is expressly limited to "photographing *simultaneously* upon separate films the picture and the sound."

DeForest's testimony and his notebook show that the entries he relies upon refer to film that he had taken, having sound record only.

Referring to DeForest's testimony, page 5, the first entry referred to by him is under date of December 26, 1920, as follows:

"Too faint. Had to develop this film for 6 minutes to get at all heavy track, this completely fogged it. So a picture would have been ruined."

Obviously, this falls very far short of the disclosure of the invention as it fails to contain the above-quoted limitations [fol. 162] of the count. The only thing it discloses is DeForest's conclusion that if a picture had been on this film it would have been ruined. It suggests no remedy for the difficulty, much less does it disclose the idea of recording simultaneously on separate films, etc.

The only other entries referred to by him in his notebook are (R., p. 25) the first under date of December 28, 1920, which is as follows:

"Developed this last 10 minutes until well fogged. This would be too long for cine picture. Hence, will probably need to make 2 negatives (picture and sound) and print on same pos."

This discloses that the development was too long for a picture and that he would "probably" need to make two negatives and print on the same positive, but it wholly fails to disclose the first requirement of the issues, i. e., "photographing *simultaneously* upon separate films the picture and the sound."

This entry is the nearest approach to the issue of the three entries. The next one, under date of January 18th, is as follows:

"Developed 11 minutes (very cold day) (longer development is best for sound film but not for picture. Hence, will probably use 2 films)."

This entry goes no further than to point out that a long development is not good for a picture record and that he would "probably" use two films. It lacks the limitation of the simultaneous taking of the sound and picture records, and also the second limitation reprinting on the same positive. The fourth and last entry cited, Record, page 25, under date of April 6, 1921, is no better than the first.

The first, third and fourth entries may be dismissed from consideration due to their meagreness; so we will [fol. 163] only consider the second entry which is pointed out lacks the idea of *simultaneous* taking of the sound and picture negatives on separate films. *This is a distinct limitation of the issue. A disclosure which fails to include it must fail as a disclosure of the issue.* It would seem unnecessary to discuss authorities on this point. As shown by the above quotation from the Examiner's ruling, it is "the usual ruling in interferences that each limitation of the claims is to be deemed essential." That this is so is made further obvious by considering the issues from the standpoint of infringement. Suppose DeForest had sued one for infringement of either of these claims and it was established that the sound and picture records were not taken "simultaneously" but that the pictures were first taken, printed and projected, and that the sound record was then taken by "scoring" it to the picture, and the two then printed on a common positive. Certainly, the defendant would escape on the ground of non-infringement of the very definite limitation which the patentee has placed in the claims.

This point is well taken regardless of any ruling of the Patent Office that this limitation was necessary to support the patentability of the issue over the prior art. But as a matter of fact the Board of Appeals has made such a ruling in this case. The Board in discussing the prior art in their opinion on Vogt et al.'s ex parte appeal from the Primary Examiner in rejecting their claim 1 and the claims which are the issue of this interference, and in pointing out the distinction of these claims over the prior art, stated among other things:

"The Examiner allowed these claims (meaning to DeForest) which is evidence of their patentability notwithstanding that the Greensfelder patent was prior art and which shows the printing of the two positives side by side, Fig. 5, as does also the Craig patent as above set forth. Greensfelder *does not photograph his negatives simultaneously.*"

[fol. 164] This Board thus points out that the limitation in the claims, of photographing the sound and picture records simultaneously, is in their opinion the distinguishing feature of the issue over Greensfelder. And so it is. *So far as concerns the issue, the disclosures in the notebook entries do not go beyond the prior art, and therefore, clearly they cannot be held to be a disclosure of anything which has been found patentable over the prior art. We respectfully submit that they must fail as a disclosure of either of the issues.*

The 2nd and 3rd entries are the only ones in the two DeForest notebooks that even suggest the use of separate films for sound and picture. DeForest admits this at Record, page 37:

X Q. 54. "And in that book, as far as I could ascertain, there are only two entries,—namely, those under date of December 28, 1920, and January 18, 1921,—which make any reference or suggestion to the use of two separate films for recording sound and pictures; is that correct?

A. Yes; those are the two references to the use of two films, one for recording sound and one for the picture."

See also X Q. 64, to the effect that there are no entries to this idea in the second notebook.

DeForest does not testify that he disclosed anything to Garity with regard to recording sound and pictures on separate films, beyond what is set forth in these notebook entries. Nor does Garity testify that he received any disclosure from DeForest with respect to this matter, beyond what he read in these entries.

As to DeForest's own testimony, nowhere does he testify that he had the idea of simultaneously taking the sound and picture records. Commencing near the bottom of Record, page 24, he makes his first statement as to

[fol. 165] what he had in mind with respect to combining sound and picture records on film. This statement fails to contain either of the above quoted limitations of the counts, and is merely a statement that he realized from the beginning that if the sound and pictures were taken on the same negative there would be trouble in developing. The next statement he makes as to the solution of his troubles, commences near the bottom of Record, page 26, wherein he again fails to state any conception of the idea of photographing simultaneously on the two negatives.

In this connection it should be noted that the excuse DeForest gives (R., p. 31, in answer to Q. 25) for not having reduced the invention to practice, i. e., that he did not have two cameras to synchronize nor means for synchronizing them—which excuse was shown on cross examination to be untrue—is in no sense a statement that he had the conception of the simultaneous taking of sound and pictures in 1921, much less prior to April 14, 1921. The statement he gives at that point of his testimony is not as to his conception or disclosure at any particular time, but is merely in answer to the question of whether he attempted prior to July 16, 1921, to use "the invention of this interference" which, of course, carries with it the limitation to the simultaneous taking of the two negatives, and DeForest realized this in giving his answer.

The only two witnesses who testified on behalf of DeForest with respect to a disclosure by DeForest of his difficulties with developing the film, are Garity and Senner. Nowhere does either one of them include in his testimony as to DeForest's disclosure, a statement that DeForest disclosed to them the idea of taking the sound and picture negatives *simultaneously*. Garity's first reference to the disclosure is at Record, page 58, Q. 14, and the only thing he states is that it was realized that the "developing of the voice record would have to be separate from the developing of the picture."

[fol. 166] He next refers to DeForest's disclosure to him in answer to Q. 20, Record, page 59, wherein he states that DeForest told him that,

"at some time soon or later, when the opportunity presented itself, he would develop the necessary mechanical apparatus to develop first the picture and then the voice

and then superimpose the two on a single negative, from which we would make the positives. The actual mechanical work wasn't done at that time, because there was no necessity for it."

This statement is entirely void of any reference to taking the sound and picture record simultaneously. At page 61, under grossly leading questions, he says that he saw these entries in the notebook at about the dates thereof, but this goes no further than the entries themselves and hence fails, and he retracted this testimony on cross-examination.

The only reference by any of DeForest's witnesses with regard to taking two negatives simultaneously, is the statement made by Garity in his attempt to excuse DeForest's failure for not reducing the invention to practice. This is found at Record, page 65, X Q. 52, wherein he stated that it was understood that a sound camera and a motion picture camera could be connected together by some drive shaft to synchronize one with the other. While this statement embodies an appreciation by him *now* of the taking of the two films simultaneously, yet this is clearly not testimony that DeForest disclosed this idea to him, much less at any time prior to Vogt, et al.'s, date of April 14, 1921, nor for that matter, at any particular time during the period covered by DeForest's notebooks which ran from November, 1919, until January 26, 1922. The question which he answered shows that this knowledge by him was not as of any particular time during the running of the [fol. 167] notebooks. Garity probably got his idea of the simultaneous taking, from the issue itself.

The witness Senner does not mention the notebooks. With regard to Senner's deposition, he points out at Record, page 79, that DeForest brought a film to his place showing picture and sound records thereon, and that he pointed out to DeForest that the picture was much underexposed. This shows that the sound and the picture were not taken on separate films and separately developed and reprinted on one film, but that they had been developed on the same film and possessed the old difficulties. At Record, page 80, Q. 26, he says that DeForest had many ideas, "amongst others he had the idea of using a separate film for the picture and for the sound," which *Senner says he immediately discouraged.* Obviously this testimony falls far short of establishing a disclosure of the issue and dis-

closes nothing over the prior state of the art. All that DeForest has to say as to his alleged disclosure to Senner is found on Record, page 27,—"I discussed these problems and the development of my films with Mr. Senner," etc.

This is the entire evidence offered by DeForest in support of any disclosure of the issue prior to June 30, 1921, when he sent his description and sketch to Mr. Darby based on the idea of taking *enlarged sound* records separate from the picture record, and finally recording both on a single film.

In that conception sketch, Exhibit 4 above mentioned, Deforest by that time had conceived of the idea of photographing *simultaneously* the sound and the pictures, for the first statement on that paper is "*Claim basically* the method photographing *simultaneously* on separate films the picture and the sound, and then *reducing* the sound, * * *." It will be noted from this exhibit that DeForest had underscored the word "*simultaneously,*" thus emphasizing the importance of it as a part of his invention, which [fol. 168] at that date he had—but it was too late. If, as DeForest now contends, the simultaneous taking of the picture and the sound was so obvious and was the only way that anyone would think of in producing a talking picture film, why, when he submitted this memorandum to his patent attorney for the preparation of the application in suit, did he find it advisable to lay such emphasis on the word "simultaneously" in instructing his attorney as to the claims to draw? Why did he not simply instruct his attorney to claim basically the method of photographing on separate films the picture and the sound, etc.? It should be borne in mind that the talking picture art at this time was in its infancy, in a laboratory state, as shown by this record. Up to this time public demonstrations of talking pictures produced by the method of photographing sound in any form, had not been publicly given.

Nor can it be said in this connection, even if saying so would do any good, that photographing the picture and the sound simultaneously was the obvious way that anyone would *now* think of doing it because (1) the Patent Office held that this is the distinguishing feature over the art; (2) the fact is that others at that time had suggesed the other method—non-simultaneous taking—*and it is in extensive use today,* as for example where a picture is taken in

the open and later "scored" to music, speaking or singing, in the studio; or where one acts in a picture who cannot sing or speak well and later another sings or speaks, and the picture is "scored" to the song or speaking, etc.

The burden is on DeForest to prove his conceptions by clear and convincing testimony. We respectfully submit on this point of the case that DeForest has utterly failed to show conception of the invention at issue prior to the record date of Vogt et al., and the latter being the first to conceive and reduce to practice, must prevail.

It is thought unnecessary to quote extensively from law authorities as to the requirements for disclosure. We will [fol. 169] content ourselves with the following quotations:

Robinson on Patents (p. 532):

Sec. 376. "The conception of the invention consists in the complete performance of the mental part of the inventive act."

* * * * * * *

Sec. 378. "This idea must, in the second place, include every essential attribute of the complete and practical invention."

Sec. 380. "*Date of Conception is Date of Complete Conception.*

"The date of the conception of an invention is the date when this idea of means, including all the essential attributes of the invention, become so clearly defined in the mind of the inventor as to be capable of exterior expression. *The evidence* by which this date is determined, in case of controversy, *must be of such a nature as to demonstrate that the conception was complete.* Obviously, the mere assertion of the inventor that at a given time this idea was fully present to his mental vision, unaccompanied by contemporaneous acts or words indicating its existence, is not such evidence; for though his good faith be unquestioned, it is still doubtful whether his apprehension of the invention was definite enough to have enabled him to reduce it to practice without a further exercise of inventive skill."

See also, Mergenthaler vs. Scudder, C. D. 1897, page 724, at page 731:

"A complete conception as defined in an issue of priority of invention is matter of fact and must be *clearly estab-*

[fol. 170] *lished by proof.* The conception of the invention consists in the complete performance of the mental part of the inventive act. All that remains to be accomplished in order to perfect the act or instrument belongs to the department of construcion, not invention. It is, therefore, the formation in the mind of the inventor of a definite and permanent idea of the complete and operative invention as it is thereafter to be applied in practice that constitutes an available conception within the meaning of the patent law."

DeForest contends in his brief that the Board in awarding priority to the senior parties, based its conclusion on the point that the Greensfelder patent required the issue to be limited to simultaneous taking of the records; that the patent does not require this limitation and that therefore the lower tribunals erred in their decision. These contentions are obviously not sound. We will discuss the Greensfelder patent and its relation to our first contention infra, under the heading "Reply to DeForest's Brief."

Second Contention

Genuineness of the pencil notebook entries of December 28, 1920, and January 18, 1921, should under the facts here be viewed with grave suspicion, and have not been proved with that degree of certainty required.

This phase of the discussion is distasteful to us but we feel it our duty to take it up. In doing this we do not wish to be understood as challenging the good faith or the integrity of the witnesses Garity and Senner, who are presumably disinterested witnesses although no doubt old and staunch friends of DeForest, and it would be unfair to do this. We believe that these two witnesses testified in good [fol. 171] faith and testified to what they now recollect as being the facts disclosed to them and the dates of these disclosures, which occurred seven years prior to their testimony; although they no doubt gave DeForest the benefit of any doubts. But no human being could be expected to remember over a period of seven years, with any degree of certainty, precise oral statements to them made over such a length of time, nor could they be expected to fix within a month or two the exact date of any such statements to them, without some definite record by which to fix it. Indeed, any witness who would attempt to do this after seven years

without any record must have his sincerity and integrity severely questioned. Neither of these witnesses has attempted to positively fix the date of DeForest's alleged disclosures to him as being of any definite date, without the aid of some record.

With respect to the witness Senner, he fixes the date of such disclosures as he received from DeForest, by the date of purchase by DeForest of a motion picture camera from Senner's concern, which date he did not personally remember. Using this as a means of fixing his date, Senner testified that the disclosure was "within a week or ten days of the purchase of the camera" (Q. 29, R., p. 81). It has been proven by another that the camera was purchased on February 28, 1921, and a week or ten days would place the disclosure at the earliest, as of about March 7th. The difference between March 7th and April 14th—the date of Vogt et al.—is but five weeks. This disclosure of DeForest to Senner was a mere passing event in Senner's every day work. He was at the time manager of the motion picture department of Herbert & Huesgen, of this city. He is now a "motion picture camera man." DeForest coming in to him and discussing with him a strip of film that his concern had developed for DeForest, was a mere passing incident in his day's business. He frankly admits that aside from [fol. 172] the purchase of the camera—the date of which he does not testify to—he is testifying from "nothing but my memory" (X Q. 44, R., p. 83), and that he was not testifying to any dates except that the disclosure took place within a week or ten days after the purchase of the camera, according to his recollection.

We submit that the human mind, under these circumstances, cannot be relied upon to establish, with any degree of certainty, whether under such circumstances, the disclosure took place on say March 7, 1921, as distinguished from say April 15, 1921, which would be too late. Furthermore, according to DeForest's testimony, it must have been "several weeks" instead of a week or ten days after the purchase of the camera before DeForest could have had any films containing sound and pictures to show Senner. He testified (X Q. 74, R., p. 44):

"It was several weeks after I got the camera before I had the necessary attachment placed on the same for recording sound on the same film with the picture."

If the date of disclosure—such as it was to Senner—must rest on Senner's testimony, clearly it has not been established with any degree of reliability or certainty prior to the record date of Vogt et al.

In the case of Garity, it is clear from his testimony (considered, infra), that he relies wholly upon the pencil entries that DeForest himself made in his notebook on two dates to be discussed, as the sole means by which to fix the disclosure to him as of any date prior to April 14, 1921, as distinguished from some date subsequent thereto; and this, of course, predicates the date of his corroboration of DeForest entirely upon DeForest's integrity and the genuineness of these pencil notes.

We are, therefore, thrown back on a consideration of the genuineness of the two DeForest pencil notes of December 28th, 1920, and January 18th, 1921. This brings us to a [fol. 173] consideration of the reliability and integrity of the witness DeForest.

This record shows him to be unworthy of belief, and as one upon whose acts and testimony, reliance cannot be placed. In support of this contention we first invite attention to the preliminary statement in this case. This statement was sworn to in December, 1925, and in it he states that "the invention was first reduced to practice on or about January 15, 1921." *It appears from his testimony that this was a willful misstatement made with full knowledge of the facts in this case, including the information in his notebook.* It must have been made with the hope and expectation that he would be able in some way to establish that fact.

Referring to the record, DeForest (R., p. 31, Q. 25) was advised of the filing date of his patent in interference, and was asked:

"Had you *attempted to actually use the invention* of this interference prior to the filing date of your application? A. *No, I did not,* for the reason that I had only my motion picture camera—my one motion picture camera—" etc.

And further on "I would have had to have two cameras." Again at Record, page 36, X Q. 51, when asked if he was intending by his testimony to give the impression that three-fourths of his time during the period in question was occupied in taking picture and sound records on separate

films and then printing on a third, he testified, "Oh, no, not at all. *I did not begin to take pictures until* I purchased the camera from Herbert & Huesgen in *February, 1921.*"

Now, aside from the notebooks, we respectfully submit that if there was anything that must have stood out in DeForest's mind with regard to this entire matter, it must have been that he had not reduced this invention to prac- [fol. 174] tice—that *he had never even photographed on two separate films,* the picture and the sound. This record clearly shows that to be the fact.

Not only this, but DeForest and his attorney had these notebooks, that he testifies about, at the time that the preliminary statement was prepared. He was cross-examined about this (R., p. 34), where he testifies that they had been either in his possession or in the possession of Mr. Darby from July, 1925, until produced for his testimony.

As previously pointed out, DeForest admits that there are no other entries in his notebooks than those above discussed, making any reference to the use of separate films for sound and picture, and a careful inspection of the books shows that there are no other entries on this point. Furthermore, he testifies (R., p. 22) that

"I was very careful during this period to make note of almost every experiment which I conducted, and also the line of research which I proposed to work."

From the foregoing it will be obvious, and the notebooks themselves which were in his possession show conclusively and independent of reliance upon his recollection, that he had never attempted a reduction to practice of the invention.

There would seem to be no doubt of the fact that he is guilty of making a willful and deliberate false oath.

Furthermore, there has been no effort on his part to corroborate the statement in his preliminary statement that the invention has been used commercially. It would appear from Garity's testimony that the invention has not been so used. Garity testifies commencing at X Q. 65, Record, page 67, that the invention was never utilized the entire time he was with DeForest, and that he was there up to 1924.

[fol. 175] A man who will thus make such a false oath should not be entitled to any presumptions of good faith or honest dealing, and his acts and testimony must be viewed with grave suspicion.

It may well be that DeForest, like all others, knew that an over-development of a film would fog a picture, and it may be that at some time during this period of from January to July, 1921, he had the general idea of utilizing two films, but we do not believe he ever entered any such statements in his notebook during that period, much less at the dates of these entries of December 28, 1920, and January 18, 1921. There are certain significant things to be considered with respect to them. *Both entries are in pencil immediately at the bottom of their two respective pages.* Neither the previous first entry nor the fourth entry have any reference to utilizing two negatives or of printing from these onto a third or positive film. He may readily have added, but at a recent date, to the second entry the words "hence, will probably need to make two negatives (picture and sound) and print on the same positive," and to the third entry, the words, "hence, will probably use two films."

It would not be at all surprising if DeForest having done this, and having shown these entries to his old friend Garity, who recalling that the sound film had to be over-developed, and relying upon the integrity of these entries of DeForest's, might well have had his mind stimulated—due to the frailty and treachery of human recollection—as to DeForest having disclosed this much to him during the course of their work in 1921; and that relying upon DeForest's integrity in making said entries, he would testify to having read those entries in the book.

Charging DeForest with the capability of doing this is not charging him with anything beyond what might be expected of him in view of the foregoing. The law presumes that a man who will thus falsify preliminary statements [fol. 176] is not entitled to have any reliance placed upon his acts or statements.

LaFlare vs. Chase, C. D., 1896, page 285, at page 290:

"We feel ourselves corstrained *wholly to discredit the story of the appellee,* Chase. His preliminary statement, which should have been made and which we must presume

was made with due care and deliberation, is undeniably false in the essential statement of the time when his alleged invention was reduced to practice. There was no justification for that statement."

* * * * * * *

"it was recklessness or worse for him to aver under oath that he had made in May the reduction to practice *which his own testimony shows conclusively could not have been made* until after July 2. If we were to apply the maximum *falsus in uno falsus in omnibus*, we might stop here and resolve the case at once against the appellee."

See also Shaffer vs. Dolan, C. D., 1904, 592. Miles vs. Todd, C. D., 1904, 420.

This brings us to that part of Garity's testimony dealing with the date of disclosure to him. We will discuss only that part dealing with date of disclosure. The first reference to it is in Q. 14, Record, page 58, where he was asked, assuming that the controversy deals in part with making separate records of sound and pictures for talking motion pictures, was that a subject that you "at any time in 1920 or 1921 were conversant with?" His answer to this mentions no dates whatsoever, so in no way fixes the [fol. 177] date of disclosure as prior to April 14, 1921. On Record, page 59, he testifies that he read every record made by DeForest in his notebooks at that time, but that again fixes no date. The answer to Q. 20, stating what DeForest told him, gives no date for the same. He was then asked:

Q. 21. "Do you recall when Dr. DeForest made this disclosure to you, and if, to your recollection, he made any record of such a solution?

A. *I can't state any definite time,* because all during that period we realized the necessity of it, and as I recall, Doctor made some notes as to method of developing mechanical technique for taking two records and producing a single film from them. * * *"

This answer clearly shows that the witness could not fix the date without reliance upon some entries in the book to be shown him. He was then asked if he could give any definite time before which he discussed the matter with DeForest,

and he answered that he would place the first time around the holidays of 1920.

Obviously this is relying entirely upon recollection and could have no probative value without something further, particularly in view of the extremely poor memory this witness is shown from the record to have with respect to other and more important and spectacular matters. At Record, page 61, Q. 28, his attention was called to the No. 2 entry in the notebook—that of December 28, 1920—and he was asked the grossly leading question—

"I • • • ask you if you can positively state that you saw that memoranda on or about the date thereof,"

to which he answered "Yes," over our objection to this leading question. The question is obviously in unaccept-[fol. 178] able form; the objection was good, and we submit the answer should not be received. He was then asked if he had any definite recollection of discussing the subject matter of it with DeForest, and he answered—

"Not this particular entry, I have no particular recollection of this definitely."

He was then asked another leading question, to wit—Q. 30, if he had any definite recollection of discussing the subject matter of the entry with DeForest on or about the date thereof. This was likewise objected to, and he answered—

"This subject matter was discussed continuously on and off throughout that period. I cannot name any particular time on which we discussed it."

This again shows the utter impossibility of this witness, from his own recollection of things, to identify the disclosure such as it was, at a date prior to April 14th, as distinguished from a date subsequent thereto, which date falls right in the middle of this period that he is testifying about. He was then shown the entry No. 3, of January 18, 1921, and was asked the same grossly leading question, as to whether he could recall having read that entry on or about the date thereof, and over objection he answered in the affirmative. We submit that for the same reason this answer must be rejected from consideration. It may be well to state at this point also that the witness did not fully comprehend the significance of these answers

of his to those leading questions, for on cross examination he clearly retracted this testimony.

The immediate point here is that any effort by Garity to fix the date definitely has depended *entirely upon the genuineness of these entries.* As these are the only two entries that refer at all to two films, we may disregard [fol. 179] the question about the fourth which is along the same lines as above.

In order to test out whether this witness really appreciated what he had been testifying to under leading questions, by which words were being put into his mouth, the first cross question to him was one based on fictitious premises (X Q. 40), in which he was asked to explain how he was able to identify the fourth entry as of the date under which it appears, and yet as we understood him, he was unable to identify the others as of the dates under which they appear. To this question he answered—

"I don't think I identified them exactly as to date. I can't do that. I can testify to the record—the running record. I was conversant with that record when made, but to say that a particular record 2 or 3 or 4 was made on a certain date, I can't testify to that. *My memory doesn't go back that far."*

X Q. 41. "In other words, what you know about this notebook is that Dr. DeForest was keeping a notebook of this character in 1921 and 1922, making entries in it, *and that you were in a general way conversant with the notebook at that time?"*

A. *"Exactly."*

We think this clearly shows that Garity relies wholly upon the genuineness of these entries to fix the date as prior to April 14th of that year.

Not only this, but the record shows that Garity has an extremely poor and unreliable memory. From the testimony in a prior interference argued before the Board with this interference and referred to by them in their opinion, counsel for appellees was aware of the fact that the DeForest Company's factory building—the company with whom Garity had been employed—had completely burned down at some time while Garity was employed there; and counsel had since the taking of that testimony learned the correct date of this fire. Counsel felt that

[fol. 180] if any event around that period should stand out in Garrity's mind it should be the date of that fire, and that if Garity could not remember the date of that outstanding event, then his recollection over a period of seven years on the question of whether he had received a disclosure from DeForest before or after April 14th, would certainly not be entitled to any weight. The correct date of this fire was January, 1921, so counsel put the question to Garity—

X Q. 73. "When was the fire at High Bridge?" A. "*The latter part of 1921,* I recall."

X Q. 74. "Do you remember in what month?" A. "I think it was in *September or November*—somewheres in the fall; we had just finished inventory; that is generally taken in the fall."

DeForest's counsel realizing this situation, endeavored to straighten Garity out. But this only tended to emphasize the unreliability of his memory. The re-direct commences on page 72. He was asked what was his recollection as to the fire occurring before DeForest went to Europe in July, 1921, or afterwards (it occurred before). This was another outstanding event. He answered, "I think it was after Doctor went—after, I would say." He was then prodded with other questions to try and refresh his recollection, but they all failed. Again on re-direct after a conference between DeForest and his attorney, they again went back at Garity to straighten him out on this, and after another series of questions which failed, he was asked (R-R. D. Q. 117):

"I am endeavoring to refresh your recollection as to the date of the fire. Do you recall a New Year's Eve party that was held at 1415 Sedgwick Avenue?"

This and other questions with regard to this famous party finally brought from Garity by a series of deductions, the [fol. 181] correct statement that the fire occurred in January, 1921.

We respectfully submit that Garity's recollection as to DeForest's laboratory work that happened seven years prior—although his intentions were no doubt honest—is shown to be wholly unreliable and cannot be accepted as establishing the date of disclosure as of the date of these

notebook entries. We think that all that Garity's testimony can be accepted as establishing is that he knew that Deforest was keeping notebooks and making entries therein, and that DeForest, at some time during this period, had discussed with Garity difficulties in developing the sound records. Everything else could honestly come—with the frailty of human memory—from his recollection being stimulated by his accepting the genuineness of these entries shown him by his old friend DeForest. At all events it is clear that Garity relies wholly upon the genuineness of these entries.

The burden is upon DeForest to establish the date of his disclosure—such as it was—with reasonable certainty. We have shown that DeForest's conduct and action in this case should be viewed with the gravest suspicion and that these notes in and of themselves are suspicious in view of the foregoing circumstances. His opponents being foreigners, he knew they were limited to their foreign application dates, and these patents having been issued, *he knew before this interference was declared, what dates his opponents were limited to.*

We submit that the entries should not be accepted as genuine and that the disclosures by DeForest to these witnesses, such as it was—not that of the issue—has not been established with that degree of certainty required, as of a date prior to April 14, 1921.

The Examiner of Interferences has correctly so ruled. He held:

"Furthermore, these corroborating witnesses had no means of fixing the date." * * * "The dates here are [fol. 182] so close, however, that the impressions of the witness are not sufficiently reliable to overcome the record date of Vogt et al."

To the same effect is the holding of the Board at Record, page 112.

Third Contention

That assuming (but only for the purpose of discussing this contention) that DeForest has proved a disclosure of the invention as of January 1, 1921, he was utterly lacking in diligence and had totally neglected the completion of the invention.

The fact that DeForest had neglected this invention from the date of his conception to June 30th, the date when he submitted it to his attorney, is so conclusively established—indeed, admitted—that it is difficult to see how he can present any argument in support of diligence. True, he and his witness Garity at first attempted to excuse lack of diligence on the ground that DeForest had but one machine for photographing film, and Garity said that the cost of a second would be a matter of some two or three thousand dollars, but this was all exploded on cross examination when it was shown that DeForest had these two machines as early as February 18, 1921—two months before the entry of Vogt et al. into the field. As it is admitted by his witness Garity that DeForest only lacked a connecting shaft for these machines to be in possession of the full mechanism for trying out the invention, there would seem to be no excuse whatsoever for his failure to attempt to complete the invention.

We note, however, the testimony by DeForest in regard to his being extremely occupied during the period in question in working on his "three methods of recording sound * * * *to determine which was the most practical*" (R., p. 21), and inasmuch as he contends that this work should [fol. 183] be taken as diligence in the perfecting of the invention at issue—an entirely different invention—it may be well to discuss this point first before taking up the other testimony on diligence.

It will be understood that the recording of sound on film was a well understood and known accomplishment at the date of DeForest's conception of the invention at issue. It is disclosed in numerous patents and had actually been accomplished not only by others but by DeForest. It may be well to point out here that in the above referred to companion interference #51947 between DeForest and these same inventors, the invention there at issue was this very idea of recording sound on film by a particular lamp—a glow lamp. DeForest won that interference before the Examiner on this very contention of his diligence in working on the problem of sound recording. It availed him there because sound recording by glow tube was the invention there at issue; but it cannot avail him here. Such work was work in completing the invention of that issue; but in this case he has totally neglected the invention here at issue in order to continue on that other work to find out

which of several different light sources "was the most practical." That was his privilege. But he cannot now complain because he totally neglected the invention here at issue to continue to research throughout the ramifications of the problems relative to recording sound.

His notebook shows that at the time when he should have been diligent with the invention here at issue—if he had conceived it—he, instead, was exploring every conceivable arrangement, combination and system of instrumentalities for recording sound, with a view, no doubt, of protecting all valuable ideas along that line. He was trying out all of these various systems, methods and devices not only with one particular source of light, but as he testifies and as his notebook shows, he was trying it out with each of the three different sources of light which he thought [fol. 184] would be operative for the purpose, i. e., the fine incandescent filament first, then the speaking flame, and then the glow tube. In this connection, we refer first to his record in said companion interference, at page 88, where, referring to this work of sound recording, he states—

"I therefore began in the summer of 1919 to actually photograph sound waves, using these three methods. I continued these researches extensively through the fall of that year and through the ensuing year 1920 and to the latter part of July, 1921, with practically no let up, except when I was away from the city on business for the company."

And at page 89:

"The very first recording was done with the short filament incandescent lamp for the reason that this device was the smallest and the simplest and was most easily transported from the factory to the dark closet in the office building. I was determined to carry out a most careful and thorough development work on all of these three fluctuating light sources and chose the simplest one at that time as the one to work on first."

Again at page 125 of said Record, he testified as follows:

X Q. 221. "Were you successful in the experiments in which you used these glow tubes"?

A. "*Yes, practically all of them operated,* some better than others, of course. *I had obtained very satisfactory talking film by this method long before I left New York,* and had even combined the pictures and the voice record on the same film in New York."

He thus claims that he had obtained satisfactory sound films by the glow tube light, the third type of lamp tried, [fol. 185] long before he left New York—referring to his going to Berlin in July, 1921, as here and also there testified to. From his previous testimony, above quoted, it is shown that he first worked out results with the incandescent filament type of lamp even before this; and his notebooks here record that he then took satisfactory sound film with the flame light, and thereafter with the glow tube. He therefore, like others, according to his records, was able to make "satisfactory talking films" prior to the entry of Vogt, et al., into the field of this present issue. They may or may not have been as perfect as DeForest ultimately hoped to get them, but it is shown by testimony in this case, and by his notebooks, that he had successfully recorded sound, *and as early as October, 1920, according to his notes, had gotten "excellent" records.* He sould readily have done so in conjunction with taking motion pictures to reduce the present invention to practice, if he had seen fit to do so—if he had not neglected and abandoned it for another solution of the problem, which apparently he preferred, as will later be shown.

His notebooks in evidence, from a period even prior to his conception, until the filing of his application in this case, both prior to and after the entry of Vogt, et al., into the field, contain numerous entries by him to the effect that utilizing a "speaking flame" lamp he got sound films which were "very good"—"Fine, excellent," "quite good," and similar remarks showing that he could record sound, so as to reduce this invention to practice if he had had a mind to do so. Such entries in his notebooks will be found, for example, at the following places, and there are many others: October 16th and 20th, "Good"; October 20th and 21st, 1920. "Very good"; November 9th, referring to experiments 7 and 8, "Very good, fine, excellent! Best yet," and other laudatory statements continuing on, and again on January 16th, 1921, with reference to experiments 2 and 3, "Excellent," "Excellent, best to date,"

[fol. 186] and again under March 22nd, "Best of all," and so on, continuing but with a different kind of lamp, after the entry of Vogt et al. into the field, as, for example, May 9th and 12th, "Quite good"; May 6th, 15th and 16th, "Best up to date," etc.

DeForest's testimony in this interference as to his work in sound recording is not that he was trying to get a sound record so that he could complete this invention, but rather that he was working on three different methods for recording sound, to see, not whether he could get a sound record, but *to see which one of three methods "was the most practical."*

It hardly needs any citation of authorities to this Court to support our contention that work in improving upon a different invention from the one at issue, or, what is worse, in contrasting the results of three already completed inventions, each different from the one at issue, cannot be accepted as constituting diligence in perfecting the invention at issue, nor as an excuse for neglecting it. DeForest reaped the benefits of his experiments with recording of sound by obtaining different patents on that subject. But we submit that that work cannot again avail him in this interference.

It was incumbent upon him, in order to protect his rights to the invention here at issue—if he had had a conception of it prior to Vogt et al.—to complete the invention by either using diligence in reducing it to practice or in filing his application. He did neither, and should suffer the consequences.

He is not in the position of a poverty-stricken inventor, for Garity testifies that during the year 1921, DeForest expended between upwards of $10,000 to $20,000 in phonofilm experimental work alone (R., p. 71). Nor was he in the position of one who did not have available to him the apparatus for reducing the invention to practice, for, as will next be shown, the only thing required by him to do this was to have one of his mechanics spend a day in connecting [fol. 187] the two machines together by a shaft. He failed to do this, notwithstanding the fact that from some time after the purchase of the camera in February on until the date of the filing of his application in July, the record shows that *he was making motion picture film*—recording and projecting sound and pictures—but producing the film not by the invention here at issue *but by another method,*

as will be pointed out—totally neglecting the invention at issue.

Referring now to the testimony bearing on the qeustion of diligence, or rather his lack of diligence, DeForest testifies (R., p. 28) that at least three-fourths of his time was devoted to the Phonofilm problem during the period in question. But he did not mean by this that this work was on the invention at issue. His subsequent testimony shows clearly that he was only referring by "Phonofilm problem" to the recording of sound. This is shown, for example, by his answer to X Q. 51, where he was asked if he had referred by that statement to the taking of picture and sound records, and he answered—

"Oh, not at all. I did not begin to take pictures until I purchased the camera from Herbert & Huesgen in February, 1921."

Also at Record, page 33, his attorney, after reminding him that his application was filed on July 16, 1921, asked—

"Had you attempted to actually use the invention of this interference prior to the filing date of your application? A. No, I did not for the reason that I had only one motion picture camera."

And then he went on to say that he had no available means to couple up the two cameras, one for sound and one for pictures, that he would have had to have "two cameras" and that he did not have the apparatus necessary to do [fol. 188] that. But this was not true—not after February 18th—because his witness Torma proved that DeForest purchased a motion picture camera from Herbert & Huesgen on that date, this being the camera that DeForest referred to in the above quotation. The purchase of that camera by DeForest at that date, therefore, robs him of any excuse for not having reduced the invention to practice after that date.

Before discussing the events after the purchase of the camera, which was still two months before Vogt, et al., entered the field, we will refer to Garity's testimony to show the attitude of DeForest at this time. Garity states (R., p. 59), with reference to DeForest's disclosure to him—

"The actual mechanical work was not done at that time because there was no necessity for it."

And again at Record, page 65, he states—

"The matter of timing it in with the picture was understood; it could be done; that is, using a sound camera and a motion picture camera for taking motion pictures was only a matter of mechanical convenience, of connecting the two cameras."

He was then asked (X Q. 53)—

"And he intended to do that later on? A. There was absolutely no use doing it then. *That would be an unnecessary expense and it was conceded so simple* that there was no use buying a camera to take pictures when we did not have a sound record to begin with" (by which he later says he meant decent sound record)* (R., p. 66).

[fol. 189] When again asked whether the picture and sound photographing was tried out, he answered, "It was not. It was conceded it was so simple it was not necessary going to the expense." When then asked how much of a job it would be to connect the two cameras for the purpose desired, he answered, "It is not any job." And then he says, "A mechanic could do it in a day." He then tries to save the situation by stating that, "however, the primary cost is the purchase of a moving picture camera which runs into two or three thousand dollars" (R., p. 67). Surely, Garity, his assistant, must have known that DeForest had purchased a motion picture camera. The testimony also shows that the camera bought for $330 did not cost what Garity said it would.

It was then shown through Garity—as well as by the notebooks themselves—that DeForest had a camera for taking sound films (which Garity describes) even before he purchased this motion picture camera. Garity then testifies that DeForest could have coupled up these two cameras merely by the work of one of his mechanics for one day (X Q. 64). Then the following testimony occurs—

---

* The above quotations from the notebook show Garity to be mistaken as to DeForest not having a decent record. DeForest says he had "excellent" ones.

"X Q. 65. And that was not done up to when? A. *It was never done in my experience here with the DeForest radio.*

X Q. 66. And you were there for how long? A. For five years."

He says he was there until 1924.

DeForest did not see fit to have this one day's work done in order to complete the invention here at issue.

We, therefore, have a situation where it is conclusively established—inded, admitted—that DeForest had the two cameras, one for sound and one for pictures, as early as February 18, 1921, and that he was in full possession of all the means and instrumentalities for completing the inven- [fol. 190] *tion by making moving pictures according to the invention. But he did not do it.* His opponents were not yet in the field, and it was still time for him to have done so if it had not been his intention to entirely neglect and abandon that invention—if he had it.

The following proofs make it clear that DeForest had *deliberately* neglected and, indeed, had abandoned any prior conception he may have had as to taking sound and picture records on separate films. He himself admits, as above quoted, that after purchasing the picture camera he began to take pictures as well as sound. Senner likewise testifies that DeForest showed him film containing the combined sound and picture records within a week or ten days of the purchase of the camera. But as shown from the testimony, the two records were not taken or printed by the method at issue, but were both taken on the same film and printed together.

Now, in order to obtain these talking movie films, *DeForest had to do some kind of mechanical work.* Assuming that he had the disclosure of the invention at that time, he was free to make his election as to whether he would have a mechanic put in one day coupling up the separate sound and picture cameras then in his possession, so as to record on separate film according to this invention, or to go to the expense of buying and having the necessary delicate "sound head" mechanism attached to his picture camera in order to record sound and pictures directly on the same motion picture negative film where they would have to be developed together. It seems strange, indeed, if DeForest had the conception of the invention at issue, that

he should have elected this latter course as he did. Be that as it may, *he was free to make his election and he elected not to* couple up his two cameras so as to *complete the invention here at issue, but rather,* to go to the expense, of putting the necessary sound head attachments on his picture camera so as *to take his records by the other method.*

[fol. 191] *So far as shown by anything in this record, DeForest has never used the invention at issue, and Garity testifies positively that it was not used as long as he was with DeForest.* Furthermore, the record shows the apparent reason why DeForest abandoned his prior conception of the invention—if he ever had it—for the method which he did put into use. This is found in Senner's testimony, where, after testifying (R., p. 79) that DeForest had shown him film containing sound and picture records, he says he called DeForest's attention to the fact that the pictures were much under-exposed and the sound record over-exposed. Then the following significant testimony was given:

Q. 26. "Did Dr. DeForest describe to you any way that he had in his mind to overcome that difficulty?

A. *Well, he had many ideas,* and amongst others he had the idea of using a separate film for the picture and for the sound.

Q. 27. That is, one film for the picture and one film for the sound?

A. Yes; *which I immediately discouraged* on account of the impracticability to my mind; and *I recommended the use of more powerful lights for his subject,* in order to equalize the exposure—bring them up to the strength of the sound recording exposure."

This advice apparently DeForest heeded, and accepting it, *he abandoned the idea of two films,* one for sound and one for picture. Senner says that it was "within a week or ten days after the purchase of the camera" that he advised DeForest to drop the idea of using two films.

What appears to have happened was that DeForest, heeding Senner's advice, paid more attention to getting more nearly the same degree of light upon the portions of his film on which he was recording picture and sound, and by this precaution, and with a new developer which his notebook shows he had commenced to use with success, he was able

[fol. 192] to solve his problem without resorting to taking pictures on two films, and had totally neglected and abandoned that idea—if he ever had it—*until a new concept came into his mind:* that is, the concept of taking *enlarged* sound records separate from the picture, and then printing a reduction of same on a record with the picture. It was this last concept of June 30th, 1921, upon which his application was predicated, and no other. *The original concept was totally abandoned, if it ever existed.*

With reference to the new developer above mentioned, we call attention to the fact that in the early days, i.e., around the date of the alleged conception entries, when DeForest was having the trouble upon which those entries were predicated, the entries show that he was developing sound film for ten to eleven minutes (R., p. 25). Then at least by April 6th he had a Dr. Mees, of the Eastman Company, develop some film for him which semed to be an improvement on what he had been doing; and not long thereafter we find various entries showing sound film developed satisfactory for only three or four minutes. See, for example, the entry in the last notebook under May 12th, under experiments 7 and 9, that the film was "quite good," and then the note "developed in new (Mees) developer 4 minutes"; under May 9th, another entry under experiment 9, that the film was "quite good"; another entry under May 12th that "Best film and best of all the marginal records, and I think the best of all the Photion records. This and the preceding film developed in Mees developer. *This* for 3½ minutes. The preceding one for 4 minutes." Under May 15th and 16th a notation, "*Best up to date,*" and then immediately below that entry a notation, "Developed 5 minutes but in dilute developer (Mees type)"; and under June 3rd, "Best of all marginal records to date"; and again under experiment 8, "Developed 4 minutes No. 16 solution."

[fol. 193] There are various of these entries showing the successful results of this short acting developer which enabled DeForest to develop his film during a sufficiently short period so as not to fog the picture. Later on, he got down to 2 to 3 minutes. With regard to this question of development DeForest admits (R., p. 42) that as a general proposition you can usually develop film from 3½ to 4 minutes without fogging it, and even up to 5 minutes, and in some special developers up to 10 minutes. DeForest had hit upon a de-

veloper which solved his problems, and accepting Senner's advice, considered this a better method than the more troublesome idea of using two films.

We respectfully submit that we have established overwhelmingly through DeForest and his own witnesses and his notebooks, *that at the time of the entry of Vogt et al. into this field and thereafter,* and, so far as this record shows, up to the present time, *DeForest had totally neglected and abandoned his original concept of using two films, notwithstanding the fact that all the means for completing the invention were at his disposal.* Upon this alone he must fail. We have established, furthermore, that even the filing of the application of his patent in interference was not an act in continuation of that original concept. *That original concept had been abondoned completely and the application was filed on the entirely new concept of June* 30, 1921, *which rests entirely upon the idea of the advantage to be gained by taking sound record in relatively large dimensions and then reducing it for the picture.. This came too late.*

Authorities

DeForest contends that lack of activity over a period of a few months is excusable and should not be held to be a lack of diligence.

[fol. 194] While under special circumstances inactivity over a period of a couple of months or so has been excused, as for example, where the junior party was active on the invention at issue, at the time or just before his competitor entered the field, and the inactivity occurred only for a short period thereafter, or in cases where the junior party showed a desire to complete the invention but the circumstances were such that all of the means of completing the invention were not available to him, or where it incurred great expense which he was trying to arrange for, or circumstances of that kind. But no such special circumstances are present in this case. This is a plain case where there was no activity prior to or at the time his opponent entered the field or thereafter until DeForest got his new concept as to enlargement and reduction. It is also a case where *in the course of his work he had to make sound pictures and every facility was at his hand to do it according to this invention, but he deliberately did it another way.*

Under circumstances far less negligent then these, inactivity for even eight days has been held to be fatal.

In the case of Phil vs. Mersman, Com. Dec., 1903 (p. 367), the dates and circumstances were far more advantageous to the junior party than they are here. The junior party Phil conceived in January,1901, and filed July 8, 1901, a total period of seven months, a little less than in this case. The senior party Mersman filed his application on June 28, 1901, and stood on his filing date, which was but eight days prior to the junior party's filing. In this case there is a difference of three months. It was found that Phil was lacking in diligence, the Commissioner stating—

"From what has been said I am forced to conclude that while Phil was the first to conceive the invention he has not shown that he was exercising due diligence when the senior party, Mersman, made a constructive reduction to practice [fol. 195] by filing his application, and the latter is therefore entitled to an award of priority."

Another case is that of Feinberg vs. Cowan, Ct. App., D. C., Com. Dec., 1907 (p. 546).

F. disclosed the invention in September, 1903, and reduced it to practice about April, 1904—seven months thereafter. C. disclosed in January, 1904, and reduced it to practice in March, 1904. There was three months from the entry of C. into the field until F. reduced to practice—here it is the same—and C.'s reduction to practice was but one month ahead of F.—here it is three months. F. excused lack of diligence on the ground of his finances but it was held that he was lacking in diligence.

See Storer vs. Barr, Ct. App., D. C., Com. Dec., 1910 (p. 303), where is was stated—

"But anyway, there is the period of time between just prior to May 16, 1905, and July 19, 1905, which must be accounted for by him, Barr having in the meantime, July 17, 1905, constructively reduced the invention to practice by the filing of his application for the patent. It is no help to Storer to seek to explain the delay after July 19, 1905, unless he can satisfactorily account for the time between it and May 16, 1905. He has sought to do this by explaining that he wished to assure himself of the best form as well as all the forms in which the invention would be operative."

The losing party sought to excuse his delay during the two months just prior to the entry of his opponent into the field, on the ground that he was diligent thereafter, but the Court refused to accept this; and although he had been diligent after this period, the other party was awarded the invention due to lack of diligence at this critical period.

[fol. 196] The following recent decisions of this Court are pertinent to the lack of diligence in this case. In the above cited case of Beidler vs. Caps, the time during which diligence had to be shown by the junior party was about seven months. On this point the court stated:

"Of course, it was not necessary in order to constitute diligence that appellant or his mechanic should have been constantly at work upon the machine, *but it was necessary that* during that period *some time should have been devoted to it,* or a reason valid in law shown for not doing so. The fact that Smith alone could not have done the necessary work of the factory if he had devoted a part of the time between May 25, 1923, and January 1, 1924, to constructing the machine in question is not enough" (36 F. R. [2nd], p. 125).

In the case of Jardine vs. Hartog, the time in which diligence had to be shown was about five months. The invention related to a piston. The appellee did not enter the field by a reduction to practice as in this case, but only by conception. During the said five months it appeared that the appellant actually did considerable work on a piston that was only slightly different from that of the piston at issue, and it was argued that the difference was so slight and the effect of the changes from the other to the invention were so well known that the work upon the other piston should be regarded as actually work on the piston at issue. This court rejected the contention and made the following statement:

"In concluding his opinion, the Commissioner of Patents said: 'The party Hartog was the first to conceive and the first to reduce to practice, constructively, but even if the party Jardine had been first to conceive, his lack of dili-
[fol. 197] gence would prevent him from prevailing. It follows therefore that priority should be awarded to Hartog.'

"We agree with the views expressed by the Commissioner of Patents, and his decision is affirmed" (36 F. R. [2nd], p. 608).

Reply to DeForest's Brief

DeForest's brief is quite short—no doubt because there is so little of record that can be discussed in his favor. There are only three points in it that we care to refer to—(1) his argument that the simultaneous recording of pictures and sounds was the obvious and the universal practice and that therefore DeForest should be presumed to have disclosed simultaneously recording; (2) that the Patent Office tribunals' award to the senior parties was based "solely" on the interpretation of the issue as being limited to simultaneous recording; and in connection with this, their finding that the Greensfelder patent disclosed the photograph recording of sound and pictures which DeForest disputes; and (3) the statements in support of DeForest's alleged diligence.

On the first of these points, DeForest states at page 3 of his brief, that in the talking or sound motion picture industry "it is universal practice to make the sound record on a marginal edge of the standard film." In the first place, there was no universal practice in 1921 because sound talking pictures were not in commercial use. They were in laboratory use and shown in patents and there is no justification in the record for this statement. Patents of record in this case show that the sound record in some cases was made on the opposite face of the picture space; in others it was made on an entirely separate film; and in others it was made in between the pictures as well as on the marginal edge of the standard film. Furthermore, the quoted statement does not negative the fact that while the sound record [fol. 198] may be made on the marginal edge of the standard film, nevertheless the two records, picture and sound, may not have been made simultaneously; but on the other hand the sound record may be "scored" to the previously taken picture record and then photographed in this position on the positive.

On page 4 it is stated that "the obvious solution of the problem thus presented, which solution constitutes the invention in issue, was to photograph the picture, and simultaneously therewith photographically recording the sound,

on separate negative films," etc. This is nothing short of a statement that the invention in issue was an obvious thing. If so, then there was no invention to be patented. This only shows the extent to which DeForest has gone in his argument to try and have it presumed that he had a disclosure of the invention. Having obtained his patent he is estopped in this proceeding from making such an argument.

At page 17 he states that it is impossible to conceive the recording of an action and its incidental sounds unless they are recorded simultaneously. We have already pointed out that there is no foundation for this statement on the record, and that the statement is contrary to the facts and to present common practice.

As to the second point—the basis of the award of priority; DeForest states at page 2 of his brief, that the concurrent decisions awarded priority to the senior parties "solely" because of the above interpretation placed on the claims. We have already pointed out that the award was on three different grounds, namely, lack of conception because of this interpretation, which is certainly correct; lack of proof that the conception, whatever it was, was prior to the senior parties' date, and lack of diligence in reduction to practice; each of these findings being separate and distinct from the other.

DeForest further contends that the Patent Office erred in stating that Greensfelder disclosed everything in the issue except the simultaneous recording, whereas, according to DeForest's contention, Greensfelder did not make [fol. 199] such a disclosure. But it is clear from the decisions of the Patent Office tribunals that in holding the claims limited to simultaneous recording they were merely following the "usual rule" that each limitation in a claim must be regarded as essential; and they merely stated that the rule was strengthened in this case because of their finding with respect to the Greensfelder patent. Even as to our first contention—lack of disclosure—they did not ground their decision on the finding that Greensfelder showed everything else in the issue. As we see it, the disclosure of the Greensfelder patent is not at all vital to a decision in this case. As a matter of fact, however, we submit that in so far as the subject of this particular invention is concerned, the Board was right in their finding that Greensfelder disclosed everything but the simultaneous recording.

As to the Greensfelder patent, DeForest states, commencing at the bottom of page 17, that this patent does not disclose in any sense the photographic recording of sounds of any particular action, and that the patent does not contemplate combining the picture with "all" of the sound incident to the picture and does not photograph "sound waves." He further states that the patent "artificially produces" what is referred to as sound marks, etc. It is also stated that the patent discloses merely "marking on the film of control records." These statements are rather misleading and require a consideration of the counts, the method of recording sound, and the disclosure of the Greensfelder patent. In the first place, it is to be noted that the counts do not call for the method of producing talking moving pictures where "all" the sound is recorded, nor do they call for the photographing of sound "waves" so these two criticisms are at once dispensed with.

Talking or sound pictures cover a wide range. Such a picture may show an action of one or more people or things, with all of the incidental sound pertaining to the action, or [fol. 200] it may show a picture of action with only certain selected sounds, as for example where it is desired to reproduce a girl walking in a garden singing. The picture of the girl walking in the garden singing may be taken without any sound at all, and then she or another will sing the song in the studio where it is quiet and where no extraneous or interfering sounds exist, and a sound record is then made of the song "scored" to the previously taken picture, and the two then printed on a common film. Or a sound or talking picture may for example consist of a musician walking onto a stage and there sitting down and playing a piano. All of these and other combinations are commonly known and used species of talking or sound pictures.

The Greensfelder patent discloses the photographically making and reproducing of the latter type of sound picture, and so far as concerns the invention here at issue, it is just as applicable and pertinent as if it disclosed the recording of a voice instead of music. DeForest's brief gives the impression that the sound is only produced according to the Greensfelder invention by "artifically" making a mark or marks on the film. It is true that the patent does disclose this idea as one feature of the disclosure, but it is equally true that it also discloses *photographically*

recording of the sound marks as will be seen by a discussion of the patent itself.

Before discussing the patent, however, it might be well to point out that in the present commercial recording of sound, there is no such thing as "photographing of sound waves." In the system usually employed, the sound vibrations whether from a piano key or human voice, are caused to vibrate a diaphragm which in turn varies the resistance in an electric circuit containing a light known as a glow light, highly sensitive to changes in the voltage of the circuit due to the changes in resistance, and the light is thereby caused to fluctuate in its luminosity. It is these [fol. 201] light intensity fluctuations which are photographed in recording the sound whatever it may be, and therefore what is photographed are rays of light which, when developed on the film, consist of a series of fine lines or marks which stand for or represent the sound. To use these so-called sound records to reproduce the sound, it is necessary to have special reproducing instrumentalities, i. e., mechanism by which sound can be made utilizing this record. In the usual practice a constant source of light is projected through the film containing the so-called sound record, and since the record consists of a series of more or less translucent or opaque marks representing sound, this light thus projected will vary in intensity on the opposite side of the film and this in turn is allowed to impinge upon a light sensitive "cell" connected in an electric circuit and coupled up with an amplifier or loud speaker. The electric resistance of such a cell is very sensitive to changes in the impinging light, so that the current in the electric circuit is varied more or less according to the intensity of the light falling upon the cell, and this change of current in turn vibrates the diaphragm to produce sound.

Now in the Greensfelder patent, in that part of it not discussed in DeForest's brief, i. e., the part commencing on Record, page 96, line 83, it is pointed out that the sound marks are made by photographing onto the film the light which is varied by a shutter. We thus see that the sound record is produced on the film by actually "photographing the light intermittently passing through the aperture 26." Further down, line 107, reference is made to "the pianist or musician, who is to play the accompaniment to be recorded for the picture" watching the picture so as to be able to play the accompaniment properly scored to the pic-

ture. It is also pointed out, commencing line 115, that "he then plays the accompaniment to the picture, introducing whatever melodies, chords, compositions or sound effects [fol. 202] he thinks appropriate to the action of the objects or characters in the picture." And that * * * "the sound marks, corresponding to the sounds and expressions produced, are recorded on the film of camera 28." It is then described how the negative containing the sound record and the negative containing the picture, which have been separately developed, are printed upon a single positive film.

At Record, page 98, line 13, another system is described for photographing the sound marks, and at line 128, it is pointed out how the sound negative and the picture negative are printed to produce the positive.

At Record, page 95, line 17, it is pointed out that the sound is reproduced by projecting a controlled light beam upon a light sensitive cell such as a selenium cell, located in an electric circuit to vary the current therein so as to control suitable instrumentalities which in turn control the sound to be reproduced.

The only difference between Greensfelder's method and that now commonly in use for recording and reproducing sound, is two-fold. In the modern method it is possible to produce all of the incidental sound, whereas according to Greensfelder there is a limit to the amount and kind of incidental sound that he could practically record by his method. Also, in the modern method the variable current, set up in the electric circuit by projecting the light source onto the light sensitive cell, is utilized by certain instrumentalities to operate a loud speaker diaphragm which produces the sound, whereas in Greensfelder the variable electric current set up by the cell is utilized through suitable control instrumentalities to produce the sound, and it requires the presence of the instruments which originally produced the sound or similar ones. The patent does nevertheless disclose photographing of the sound, in the sense of photographically producing a sound record, and a picture record, each on separate films, and then printing both on different portions of the same film.

[fol. 203] As to the third point—DeForest's statements in support of his alleged diligence—it is stated at page 2 of DeForest's brief that only three months elapsed between his recorded conception and his filing date, of which

approximately one month was taken up in the preparation of his application. Both statements are incorrect. The elapsed period was six and a half months, and he did not submit data to his attorney until about two weeks before his application was filed.

At page 10 he admits that the simultaneous recording of sound and picture on the same film might have required reduction to practice, but thereafter he proceeds to argue that it was not necessary to have a reduction to practice. His statement thereafter, that such a reduction to practice would have required the solving of many problems, is wholly at variance with Garity's testimony, that all that was needed was the coupling of the two cameras already in his possession. At page 11 it is stated, as another reason for not reducing to practice, that DeForest "had not reached the 'developing' stage in the system." This is wholly at variance with his testimony and that of his witness Senner, that at some time between February and July, 1921, DeForest was actually recording sound and picture records on the same film and developing them thereon.

At page 12 he admits, "It is true, that after recording the problem and its solution, he did not devote any part of that time, for the reasons stated, to reducing the present invention to practice." But on page 15, he directly contradicts this, stating that "DeForest had reduced the invention to practice very shortly after he acquired the camera"—meaning the camera purchased in February, 1921. This last statement was based on the erroneous assumption that the film taht DeForest showed Senner during this period, having both pictures and sound records thereon, was made according to the invention at issue; but which the testimony shows was not the case.

[fol. 204] Submitted

It is respectfully submitted that under the well settled rule, the concurrent decisions of the lower tribunals awarding priority to the senior parties on each of the grounds (1) that DeForest has not proven disclosure of the invention prior to the effective date of the senior parties and (2) that even if he had established a disclosure in time he was lacking in diligence, should be affirmed.

Respectfully submitted, Kenneth S. Neal, Counsel for Vogt et al. S. Mortimer Ward, Jr., of Counsel.

New York, N. Y., April 15, 1931.

INDEX.

PAGE

Petition for a Writ of Certiorari..... 1

I. Summary and Short Statement of the Matter Involved 2

Subject Matter and Decisions Below..... 3

II. Reasons Relied Upon for the Granting of a Writ of Certiorari..... 11

Brief for Petitioner in Support of Petition for Writ of Certiorari..... 15

The Opinions of the Courts Below..... 15

Jurisdiction 15

Statement 15

Specification of Errors 15

Summary of Argument..... 16

Argument 17

I. There is presented here an equal division and sharp conflict of opinion of the judges in the courts below in a case of very great industrial and public importance, involving an attempt to dominate one of the largest industries of the country which affects millions of people..... 17

II. The decision of the Court of Appeals is diametrically opposed to and in direct conflict with the decision of this Court in De Forest Radio Co. *v.* General Electric Co., 283 U. S. 664, as to what is and is not a patentable invention warranting a seventeen year monopoly, and as to when advance in the art or extensive commercial use may be thrown in the scale to support invention. The Court of Appeals has adopted a much lower standard of invention than is laid down in the decisions of this Court..... 18

PAGE

III. The decision of the Court of Appeals is in conflict with the decisions of this Court in Brown *v.* Piper, 91 U. S. 37, Penn. Railroad *v.* Locomotive Truck Co., 110 U. S. 490, Dreyfus *v.* Searle, 124 U. S. 60, and other cases, which hold that a valid process patent cannot be based on the application of an old process to a new subject, with no change in the manner of application, and no result substantially distinct in its nature..... 23

IV. The decision of the Court of Appeals is in conflict with the decisions of this Court in Railway Co. *v.* Sayles, 97 U. S. 554, Pattee Plow Co. *v.* Kingman, 129 U. S. 294, and other cases, the Court of Appeals having sustained the validity of claims 8 and 9, which are for a different and broader alleged invention from that of the application as filed, the application having been unlawfully expanded during its long pendency in the Patent Office to cover the commercial art which had developed in the meantime 26

V. The decision of the Court of Appeals is in sharp conflict with the very recent decision of the Court of Appeals for the Sixth Circuit in Fruehauf Trailer Co. *v.* Highway Trailer Co., 67 F. (2) 558. The Court of Appeals in the present case gave validity to the disclaimer by which claims 6 and 7 were amended and rewritten, a purpose which the disclaimer statute was not intended to permit..... 30

VI. The opinion of the Court of Appeals is in conflict with the decision of this Court in Haughey *v.* Lee, 151 U. S. 282, and other decisions of the federal courts..... 33

PAGE

VII. The case involves an important question of patent law arising under the amendment of March 3, 1903 (32 Stat. L. 1225) to R. S. 4887 (35 USC 32), which should be settled by this Court. The question—also raised in the related case in the Third Circuit—is, what is the correct rule of law to be applied under the statute, as amended, to determine whether a prior foreign patent to the same patentees, filed more than twelve months before the United States patent, is or is not for the same invention as the United States patent..... 36

Conclusion 39

Appendix A..... 40
The Specification of The Application for the Patent in Suit as Originally Filed in the United States Patent Office on March 29, 1922 40

Appendix B..... 41
The Disclaimer Statutes..... 41

Appendix C..... 42
Disclaimer 42

CASES CITED.

	PAGE
Allbright-Nell Co. *v.* Autosteam Process Co. (C. C. A. 7), 21 U. S. Patent Quarterly 401	34
Brown *v.* Piper, 91 U. S. 37	11, 25
Carbice Corporation of Am. *v.* American Patents Development Co. *et al.*, 283 U. S. 27, 420, 422	15, 21
Commercial Mfg. Co. *v.* Fairbank Canning Co., 135 U. S. 176 (1890)	37
Concrete Appliances Co. *v.* Gomery, 269 U. S. 177, 184, 185	11, 26
Duer *v.* Corbin Cabinet Lock Co., 149 U. S. 216, 223	22
De Forest Radio Co. *v.* General Electric Co., 283 U. S. 664	11, 15, 27
Dreyfus *v.* Searle, 124 U. S. 60, 63	11, 26
Du Bois *v.* Kirk, 158 U. S. 58	33
Electric Cable Joint Co. *v.* Brooklyn Edison Co., 54 S. Ct. 586	21
Ensten *et al v.* Simon, Ascher & Co., Inc., 282 U. S. 445	30
Enameled Metals Co. *v.* Western Conduit Co., 269 Fed. 620, 624, 629 (C. C. A. 6)	32
Fireball Gas Tank & Illuminating Co. *v.* Commercial Acetylene Co. *et al.*, 239 U. S. 156	37
Frigidaire Corp. *v.* General Necessities Corp., 32 F. (2d) 277, 278	32
Fruehauf Trailer Co. *v.* Highway Trailer Co., 67 F. (2d) 558	12, 31
Gen. Motors Corp. *v.* Rubsam Corp., 65 F. (2d) 217 (C. C. A. 6)	32
Haughey *v.* Lee, 151 U. S. 282, 285	12, 33
Hill *v.* Wooster, 132 U. S. 693, 698	34
Hollister *v.* Benedict, 113 U. S. 59, 73	21
Leeds & Catlin *v.* Victor Talking Mach. Co., 213 U. S. 301 (1909)	37

PAGE

Linville *v.* Milberger, 34 F. (2d) 386, 390 (C. C. A. 10) 32
McClain *v.* Ortmayer, 141 U. S. 419, 428, 429..... 22
McCloskey *v.* Toledo Pressed Steel Co., 30 F. (2d) 12 (C. C. A. 6), 280 U. S. 556..... 34
Motion Picture Patents Co. *v.* Universal Film Mfg. Co. *et al.*, 243 U. S. 502, 519..... 17
Osgood Dredge Co. *v.* Metropolitan Dredging Co., 75 Fed. 670, 673 (C. C. A. 1)..... 34
Palmer Tire Co. *v.* Lozier, 90 Fed. 732 (C. C. A. 6) (35 U. S. C. 66)..... 34
Pattee Plow Co. *v.* Kingman, 129 U. S. 294, 299..12, 28, 29
Penn. Railroad *v.* Locomotive Truck Co., 110 U. S. 490 ..... 11, 25
Powers-Kennedy Co. *v.* Concrete Co., 282 U. S. 175, 178 27
Radio Corporation of Am. *et al v.* Radio Engineering Laboratories, Inc., 54 S. Ct. 752..... 5
Railway Co. *v.* Sayles, 97 U. S. 554.....11-12, 28
Saranac Corp. *v.* Wirebounds Patents Co., 282 U. S. 704 21
Smokador Mfg. Co. *v.* Tubular Co., 25 F. (2d) 948 (D. C. Conn.)..... 34
Simmons *v.* Grier, 258 U. S. 82..... 15
Siemens *v.* Sellers, 123 U. S. 276..... 37
Thompson Spot Welder Co. *v.* Ford Motor Co., 265 U. S. 445..... 21
Thropp's Sons Co. *v.* Seiberling, 264 U. S. 320, 330, 331 32
Walker on Patents, 6th Ed., p. 334..... 32
Western Electric Co. *v.* Citizens Telephone Co., 106 Fed. 215..... 39

IN THE

Supreme Court of the United States.

OCTOBER TERM, 1934.

No.

PARAMOUNT PUBLIX CORPORATION,
Petitioner,

vs.

AMERICAN TRI-ERGON CORPORATION,
Respondent.

PETITION FOR A WRIT OF CERTIORARI TO THE CIRCUIT COURT OF APPEALS FOR THE SECOND CIRCUIT.

TO THE HONORABLE THE CHIEF JUSTICE AND THE ASSOCIATE JUSTICES OF THE SUPREME COURT OF THE UNITED STATES:

Your petitioner, Paramount Publix Corporation, respectfully prays for a writ of certiorari to the Circuit Court of Appeals for the Second Circuit to review a judgment of that Court entered on June 11, 1934 (Vol., III, p. 1233). A petition for rehearing was duly presented and was denied on June 27, 1934 (Vol., III, p. 1273).

I. Summary and Short Statement of the Matter Involved.

This is a suit for infringement of a patent on a process for producing a composite print from a photograph of objects (pictures) and another photograph of a record of the sounds accompanying the pictures.

The petitioner, defendant below, is a well-known major producer of motion pictures. The respondent, American Tri-Ergon Corporation, is a patent-holding company which the record shows (Ex. 8) was organized in 1928 as a personal venture of William Fox (then but not now connected with the Fox Film Company) for the purpose of exploiting commercially in the United States the inventions of three Germans, Vogt, Engl and Massolle, who are the patentees of the patent in suit; but the record contains no evidence that the respondent has ever taken any part in the motion picture industry, either by the production of motion pictures, the furnishing of equipment therefor, or the grant of licenses, its principal activity being the prosecution of this and other litigation.

In a closely related case, No. 255–256, *Altoona Publix Theatres, Inc.* and *Wilmer and Vincent Corporation et al., petitioners,* v. *American Tri-Ergon Corporation et al., respondents,* a petition for a writ of certiorari to the Circuit Court of Appeals for the Third Circuit is being filed at the same time as this petition.

These cases are of major importance to the motion picture industry of this country and to the public, and petitioners have, upon request, consented to the filing of briefs as *amicus curiæ* on behalf of substantially the entire motion picture industry. As construed by the courts below, the patents are so broad as to permit the respondents to claim tribute from practically every one who has produced or exhibited talking motion pictures, or has manufactured equipment for recording or reproducing sound with motion pictures, or has done the developing and printing of sound and picture records.

Although a different patent is involved in each case, the two cases have much in common and raise several of the same important questions of law. Both patents are owned by the same respondent, American Tri-Ergon Corporation; both are based upon applications of the same three German citizens, Engl, Vogt and Massolle, who did their alleged inventive work abroad; both relate to alleged inventions used in the art of talking motion pictures; both rest upon subject matter completely anticipated by the prior art; both were copending in the Patent Office for a good many years during which the commercial art of talking motion pictures developed; both were expanded during their long prosecution to cover that commercial art; both were granted after having been persistently and consistently rejected by the Patent Office for a number of years for want of invention; and in both cases disclaimers were filed during the litigation (in the present case only five days before trial) which in effect re-wrote the claims in a manner not authorized by the statute.

Furthermore, the respondent's principal contention in one case was wholly inconsistent with that in the other case. In this case the respondent contended, and the Court of Appeals held, that the alleged invention covered by the patent here in suit was the advance in the art necessary to the success of talking motion pictures, and in the Third Circuit case, precisely the same contention was made and upheld for the different alleged invention of the patent there involved. The records show that neither assertion was true. The commercial success of talking motion pictures was due to developments in the electrical art made in this country (*infra*, p. 22).

Subject Matter and Decisions Below.

The patent here involved, No. 1,825,598 (Vol. II, p. 468), is entitled "Process for Producing Combined Sound and

Picture Films", and is commonly referred to as the **"printing patent"**. It was applied for in March, 1922 but was not taken out until September, 1931, *nine and one-half years later.*

In sound pictures of the film type, there are separate photographs of the things, persons, etc. and of the sound waves, the two being played or reproduced together. The sound waves are picked up by a microphone diaphragm (like a telephone transmitter), produce electrical currents which correspond in frequencies to the frequencies of the sound waves, the currents are amplified, and then actuate a light source to photograph on a sensitive film pictures corresponding to the sound frequencies. In playing or reproducing the sound pictures, the process is simply reversed, the sound photograph causing light variations which produce corresponding currents, which are amplified and then actuate a diaphragm (like a telephone receiver) to produce sound waves. There is no dispute that the foregoing was old before the patentees.

The patent is based upon the idea that the two kinds of pictures should be taken separately, should be separately developed, and then printed on the same film. As we shall point out, there was no new principle or discovery involved in this simple and obvious photographic process, but on the contrary it was well known prior to the patentees.

Claims 5 to 9, inclusive, and claim 11 were relied upon. Claims 8 and 9, the two broadest claims, omit entirely the intermediate step of separately developing the two films, which was the gist of the alleged invention.

The majority of the Court of Appeals (Judges Manton and Chase, the opinion being by Judge Manton, Vol. III, p. 1225) held all the claims in suit valid and infringed. Judge Swan dissented without opinion (Vol. III, p. 1233).

The District Court (Judge Campbell in the Eastern District of New York) had previously held (4 F. Supp. 462;

Vol. III, p. 1173) the claims invalid on several grounds, including the following:

1. Because of complete anticipation by the prior art.

2. Because of want of invention over the prior art.

3. Under Revised Statutes Sec. 4887 (35 U. S. C. 32), because of a prior French patent to the same patentees for the same alleged invention, granted upon an application filed more than twelve months before the application for the patent in suit was filed.

The District Court also held that the two broadest claims, 8 and 9, which omit the intermediate step of separately developing the two films—the gist of the patentees' original disclosure and the subject of claims 5, 6, 7 and 11—were invalid because unlawfully expanded in the Patent Office to cover a broader and different subject matter from that for which the application was filed. And the District Court further held that the disclaimer, filed only five days before the trial, more than ten years after the application was filed, and more than a year after the patent issued, by which two of the claims (6 and 7) were literally rewritten without any supervision of the Patent Office, was invalid and for a purpose which the disclaimer statute was not intended to permit.

Judges Manton and Chase disagreed with the District Court upon each of the foregoing points, and the decision of the District Court was reversed.

The four judges, who have passed upon the case, are thus evenly divided.*

* The situation is like that in *Radio Corporation of Am. et al.* v. *Radio Engineering Laboratories, Inc.*, 54 S. Ct. 752, in which a petition for writ of certiorari to the Second Circuit Court of Appeals was granted during the last term.

We respectfully refer the Court to the well considered opinion of the District Court (4 F. Supp. 462; Vol. III, p. 1173) for a more complete statement of the merits than can be made in this petition and brief.

The Court of Appeals stated in the introductory part of its opinion (Vol. III, p. 1225):

> "The Western Electric Company and its wholly owned subsidiary Electrical Research Products Inc. licensed its licensees, including the Appellee, *to use the process as* the Western Electric sound system."

There is no evidence in the record to justify this statement and it is contrary to fact. (See petition for rehearing, Vol. III, p. 1245).

The Court of Appeals in its decision stressed the following:

(1) "The *problem* sought to be solved by the patent was *bringing together on one positive film* the picture record, which requires one type of development, and a sound record which requires a different type of development. Its accomplishment marked an important advance in the art." (Vol. III, pp. 1225, 1226.)

(2) "The process of the patent in suit was brought to this country from Germany" [in 1927]. "Western Electric Company's engineers examined and tested it. They thereupon used it and it superseded sound on disc. Its adoption has become universal and speaks for the merit of the inventive thought therein involved." (Vol. III, p. 1226.)

(3) "On September 29, 1924" [nearly two years after the patentees had cancelled their original claims and had substituted a single claim for a process not here involved] "before any use of the invention in this country, claims corresponding in scope to claims 5, 6, 7 and 11 were asserted in the United States application. After March 31, 1925, claims corresponding in scope to claims 8 and 9 in suit were asserted in the application. There were no

> intervening rights of any sort established by the appellee or by the public in the interval between November 25, 1922, and March 31, 1925 * * * ". (Vol. III, pp. 1230, 1231.)

The testimony is positive and not disputed that in 1923 Western Electric engineers had taken photographs of objects and photographs of sound on separate films adapted for later composite printing on one film, and had separately developed those films (Vol. I, p. 358); and at that time were thoroughly familiar with the photographic operation involved in printing the two photographs so taken and developed upon a single positive film (Vol. I, p. 355). In fact, one of the Western Electric engineers, Dr. Wente, described that process in a patent application filed April, 1924 (Vol. II, p. 604). The statements of the Court of Appeals in (2) and (3) above are erroneous.

As to the first point, we respectfully submit that no such problem existed. The "bringing together on one positive film" of the picture and sound records was not a problem. The only act or operation involved was printing the two negative films on one positive film. This was done in the prior Greensfelder patent No. 1,254,684, filed in 1916 (II, p. 701), as follows (p. 3, l. 128-p. 4, l. 8):

> "A developed negative containing the rows of '*sound* marks', but on which the spaces for the pictures are blank, is superimposed upon a developed negative properly pieced and joined and having the *pictures* photographed thereon but having spaces for the 'sound marks' left blank, and *a print is made from this combined negative which will give a positive containing the pictures 4 and the corresponding rows of 'sound marks' 3, shown in Fig. 3.*"

And the idea of *separately* developing sound and picture negatives in a manner appropriate for each had been fully disclosed by the prior Bullis patent, No. 1,335,651, filed in 1915 (Vol. II, p. 714).

There was no patentable invention in the patented process. As the District Court held (4 F. Supp. 462, 469; Vol. III, pp. 1195, 1196):

> "The alleged invention of the claims in suit is a process and not an article or product.
>
> "A process consists of certain steps or operations in which the invention, if any, must reside. Cochrane *v.* Deener, 94 U. S. 780; Walker (6th Edition) § 19.
>
> "The patent in suit is entitled 'Process for Producing Combined Sound and Picture Films.' It is merely an example of composite or combination printing, a term applied to the making on a single piece of photographic sensitive material prints or impressions from two or more separate negatives, which is very old.
>
> "No photographic operation is involved which was not employed in the old art of composite printing which involved both simultaneous and consecutive exposure of separate negatives, separate development of those negatives in an appropriate manner and with different lengths of development, and both simultaneous and consecutive printing of the separate negatives on a single positive film; and was used in both black and white and color photography, and in both still and motion pictures, long before any date important here.
>
> "The patentees made no contribution to the art of photography.
>
> "Before 1900, sound was recorded photographically.
>
> "Photographic recording of sound with motion pictures and producing a combined sound and picture film, the same as the film in use to-day, is described in Haines British patent, No. 18,057, of 1906 [Vol. III, p. 1074.]
>
> "The composite printing process of the patent in suit for sound pictures was adopted as the need arose, and was used by Craig as early as 1913."

The alleged invention is purely a matter of photography. The situation is not affected in any way by the

fact that one of the films happens to be exposed to variations of light representing sound instead of the more conventional subjects.

The Court of Appeals selected claim 5 as typical. It is as follows:

> "5. A process for producing a combined sound and picture positive film, for talking moving pictures, comprising, **photographing** a sequence of pictures on one length of film, and simultaneously photographing on another length of film a corresponding sequence of sounds accompanying the action, **separately developing** the two negatives in a manner appropriate for each, and **printing** the sound and picture negatives respectively upon different longitudinally extending portions of the same sensitized film, to form the sound sequence at one side of and along the picture sequence."

The prior patent to Craig, No. 1,260,337, filed in 1913, (Vol. III, p. 861), fully anticipates this claim. Craig discloses simultaneous recording of sound and pictures on separate films, which are separately developed and then printed consecutively on the same positive film. Furthermore, the Greensfelder patent No. 1,254,684 (Vol. II, p. 701) discloses non-simultaneous recording of sound and pictures on separate films, which are separately developed, and printed **on the same side** of the same positive film. And the Bullis patent No. 1,335,651 (Vol. II, p. 714) discloses the simultaneous recording and separate development of the sound and picture records, which are printed on separate positive films and then joined together so as to form a single integral film for reproduction. Moreover, Bullis gave each negative film a special development treatment suitable for it (Vol. II, p. 716, lines 12-22; 28-47; p. 716, l. 102 to p. 717, l. 21).

The patent being thus completely anticipated, the Court of Appeals could not sustain it without resorting to alleged distinctions, which are not matters of substance, and which could not in any event patentably distinguish the

processes disclosed in the prior patents mentioned from the process of the patent in suit. (See the appellate court's opinion, Vol. III, pp. 1229, 1230). For example, the difference which the Court of Appeals found in the Craig patent was that Craig printed his two negatives on opposite sides of the positive film instead of **on the same side**, but if that could be a matter of substance—it is not recited in claim 5, above—it was nevertheless clearly taught in the Greensfelder patent, as we have already pointed out. Moreover, neither the application for the patent in suit as filed, nor the specification of the patent as issued, contains any statement that the two records are to be printed **on the same side** of the film, to say nothing of any emphasis upon this as an essential or important part of the supposed invention. The complete specification of the application as originally filed is printed in Appendix A hereto.

It is inconceivable to us that this Court would permit such a vast monopoly to be upheld on any such distinction as that upon which the opinion of the majority of the Court of Appeals is based.

At several places in the opinion of the Court of Appeals, the intermediate step of separately developing the two records is emphasized, which feature is fully disclosed in the Bullis patent (Vol. III, p. 714). Nevertheless, that court also sustained the two broad claims 8 and 9, apparently overlooking the fact that they do not contain this intermediate step. Moreover, the Court of Appeals ignored the fact that Craig was denied claims of the same scope in 1913, when Craig filed his application for patent No. 1,260,337, here relied upon (See Craig's cancelled claims, 1, 25 and 32, Vol. III, pp. 1029, 1037, 1039). If Craig was not entitled to such claims in a 1913 application, clearly the patentees of the patent in suit were not entitled to them in a 1922 application.

II. Reasons Relied Upon for the Granting of a Writ of Certiorari.

The discretionary power of this Court is invoked upon the following grounds:

(1) Because of the equal division and sharp conflict of opinion of the judges in the courts below in a case of very great industrial and public importance, involving an attempt to dominate one of the largest industries of the country which affects millions of people.

(2) Because the decision of the Court of Appeals is diametrically opposed to and in direct conflict with the decision of this Court in *De Forest Radio Co.* v. *General Electric Co.*, 283 U. S. 664, as to what is and is not a patentable invention warranting a seventeen year monopoly, and as to when advance in the art or extensive commercial use may be thrown in the scale to support invention. The Court of Appeals has adopted a much lower standard of invention than is laid down in the decisions of this Court.

(3) Because the decision of the Court of Appeals is in conflict with the decisions of this Court in *Brown* v. *Piper*, 91 U. S. 37; *Penn. Railroad* v. *Locomotive Truck Co.*, 110 U. S. 490; *Dreyfus* v. *Searle*, 124 U. S. 60, *Concrete Appliances Co.* v. *Gomery*, 269 U. S. 177, and other cases, which hold that a valid process patent cannot be based on the application of an old process to a new subject, with no change in the manner of application, and no result substantially distinct in its nature.

(4) Because the decision of the Court of Appeals is in conflict with the decisions of this Court in *Railway Co.* v.

Sayles, 97 U. S. 554, *Pattee Plow Co.* v. *Kingman*, 129 U. S. 294, and other cases, the Court of Appeals having sustained the validity of claims 8 and 9, which are for a different and broader alleged invention from that of the application as filed, the application having been unlawfully expanded during its long pendency in the Patent Office to cover the commercial art which had developed in the meantime.

(5) Because the decision of the Court of Appeals is in conflict with the very recent decision of the Court of Appeals for the Sixth Circuit in *Fruehauf Trailer Co.* v. *Highway Trailer Co.*, 67 F. (2d) 558. The Court of Appeals gave validity to the disclaimer, filed only five days before the trial, more than ten years after the application was filed, and more than a year after the patent issued, by which claims 6 and 7 were amended and rewritten, a purpose which the disclaimer statute was not intended to permit. Not only is it important to the public that this conflict be settled, but it is of paramount importance that this Court end the great abuse of the disclaimer statute so prevalent in recent years, and so well illustrated by the disclaimers involved in this case, the related case in the Third Circuit, and the conflicting case in the Sixth Circuit. (See the petition and brief in the Third Circuit case, pp. 16, 25.)

(6) Because the opinion of the Court of Appeals is in conflict with the decision of this Court in *Haughey* v. *Lee*, 151 U. S. 282, and other decisions of the federal courts. The Court of Appeals held (Vol. III, p. 1228) that the Western Electric Company, not a party—whose subsidiary, Electrical Research Products, Inc., also not a party, defended this suit—is not in a position to question the validity of the patent because one of its employees filed a

patent application containing a claim, later cancelled, for the same alleged invention, which claim, however, was immediately cancelled in view of the discovery and citation by the Patent Office of certain anticipating prior patents here relied upon. This Court held in *Haughey* v. *Lee, supra*, that such fact does not constitute an estoppel, and pointed out that (p. 285):

> "* * * the defence of want of patentable invention in a patent operates not merely to exonerate the defendant, but to relieve the public from an asserted monopoly, and the court cannot be prevented from so declaring by the fact that the defendant had ineffectually sought to secure the monopoly for himself."

In addition to its direct conflict with the law as thus pronounced by this Court, the decision of the Court of Appeals establishes a dangerous precedent in the Second Circuit, where more patent cases are tried than in any other Circuit. The soundness of this Court's holding in *Haughey* vs. *Lee, supra,* is clearly demonstrated in this case in which the entire motion picture industry would be prejudiced merely because one concern filed a patent application for the same alleged invention.

(7) Because the case involves an important question of patent law arising under the amendment of March 3, 1903 (32 Stat. L. 1225) to R. S. 4887 (35 U. S. C. 32), which should be settled by this Court. The question—also raised in the related case in the Third Circuit—is, what is the correct rule of law to be applied under the statute, as amended, to determine whether a prior foreign patent to the same patentees, filed more than twelve months before the United States patent, is or is not *for the same invention* as the United States patent.

Wherefore, your petitioner respectfully prays that a writ of certiorari be issued under the seal of this Court,

directed to the United States Circuit Court of Appeals for the Second Circuit, commanding the said Court to certify and send to this Court, on a day to be designated, a full and complete transcript of the record and all proceedings of the Circuit Court of Appeals had in this cause, to the end that this cause may be reviewed and determined by this Court, that the judgment of the Circuit Court of Appeals be reversed, and that petitioner be granted such other and further relief as may seem proper.

CHARLES NEAVE,
HENRY R. ASHTON,
Counsel for Petitioner.

July, 1934.

BRIEF FOR PETITIONER IN SUPPORT OF PETITION FOR WRIT OF CERTIORARI.

The Opinions of the Courts Below.

The opinion of the District Court is reported in 4 F. Supp. 462 (Vol. III, p. 1173). The opinion of the Court of Appeals is reported in 71 F. (2d) 153 (Vol. III, p. 1225).

Jurisdiction.

The date of the judgment is June 11, 1934 (Vol. III, p. 1233). The statute under which jurisdiction is invoked is Section 240(a) of the Judicial Code (28 U. S. C. 347, as amended). Cases believed to sustain the jurisdiction are *DeForest Radio Co.* v. *General Electric Co.*, 283 U. S. 664; *Carbice Corporation of Am.* v. *American Patents Development Co. et al.*, 283 U. S. 27; and *Simmons* v. *Grier*, 258 U. S. 82.

Statement.

The facts, so far as this application is concerned, are sufficiently stated in the petition.

Specification of Errors.

The errors which petitioner will urge, if the writ of certiorari is granted, are that the majority of the Circuit Court of Appeals for the Second Circuit erred:

1. In reversing the decree of the District Court and holding patent No. 1,825,598 valid and infringed.

2. In failing to hold that patent No. 1,825,598 is invalid because of anticipation and also want of invention.

3. In adopting a lower standard of invention than that laid down in the decisions of this Court, and particularly in failing to follow the rules of law as to what constitutes invention and as to when advance in the art or extensive commercial use may be thrown in the scale to support invention, as stated in the decisions of this Court.

4. In failing to hold that the disclaimer is an invalid disclaimer and that the claims in suit are thereby shown to be invalid.

5. In failing to hold patent No. 1,825,598 invalid and unenforceable because unlawfully expanded in the Patent Office and because of intervening public and private rights.

6. In failing to hold that claims 8 and 9 of patent No. 1,825,598 are for a broader and different alleged invention from that of the application as filed.

7. In failing to hold patent No. 1,825,598 invalid under Revised Statutes Section 4887 (35 U. S. C. 32), because of the prior grant of French patent No. 532,750 to the same patentees for the same alleged invention, upon an application filed more than twelve months before the application for the patent in suit was filed.

8. In failing to hold that the patentees abandoned their alleged invention.

Summary of Argument.

The points of the argument follow the reasons relied upon for the allowance of the writ and, for the sake of brevity, are not repeated at this point.

Argument.

It would not be feasible, within the reasonable limits of a brief in support of a petition for a writ of certiorari, to discuss fully the merits of this case. For the convenience of the Court we have printed the opinions of the courts below in a separate pamphlet to be presented with this petition. The remainder of this brief is devoted to a discussion of the "special and important" reasons relied upon which should cause this Court to grant the writ and to review the case on the merits.

I. There is presented here an equal division and sharp conflict of opinion of the judges in the courts below in a case of very great industrial and public importance, involving an attempt to dominate one of the largest industries of the country which affects millions of people.

The four judges, who have passed upon this case, are evenly divided as to the validity of the patent in suit. We have pointed out in the petition the far-reaching importance of the case to the entire motion picture industry and others, and need not repeat that statement here. The case involves an attempt to dominate an entire industry which this Court has recognized as "an important element in the amusement life of the nation", *Motion Picture Patents Co.* vs. *Universal Film Mfg. Co. et al.*, 243 U. S. 502, 519. And the attempted domination, if equaled, is equaled only by the one which this Court condemned in the case cited.

The validity of a patent of such great industrial and public importance should not be permitted to rest upon the decision of two judges, where two other judges entertained the opposite view.

Because of these special circumstances, we strongly urge that this case calls for the exercise of this Court's power of supervision to the end that "the system of federal justice may be more appropriately administered".

II. The decision of the Court of Appeals is diametrically opposed to and in direct conflict with the decision of this Court in *De Forest Radio Co.* v. *General Electric Co.*, 283 U. S. 664, as to what is and is not a patentable invention warranting a seventeen year monopoly, and as to when advance in the art or extensive commercial use may be thrown in the scale to support invention. The Court of Appeals has adopted a much lower standard of invention than is laid down in the decisions of this Court.

(a) In the case cited, this Court held the Langmuir patent for the high vacuum tube invalid for want of patentable invention, because the principle or relationship of the degree of vacuum in the tube to ionization was already known. This Court said (pp. 678, 679):

> "That the high vacuum tube was an improvement over the low vacuum tube of great importance, is not open to doubt. Even though the improvement was accomplished by so simple a change in structure as could be brought about by reducing the pressure in the well known low vacuum tube by a few microns, still it may be invention. *Whether it is or not depends upon a question of fact, whether the relationship of the degree of vacuum within the tube, to ionization, and hence to the stability and effectiveness of discharge passing from cathode to anode, was known to the art when Langmuir began his experiments. If that relationship was then known, it required no inventive genius to avoid ionization and secure the desired result by creating the vacuum in a DeForest tube or other form of low vacuum discharge device.*
>
> "That this relationship was known was the fact found by the District Court and not challenged by the opinion of the Court of Appeals."

Here, also, the District Court found, and the fact was not challenged by the opinion of the Court of Appeals, that the alleged invention involved no photographic operation which was not employed in the old art of composite printing. The patentees disclosed no photographic principle, relationship, or practice, which had not been worked out and used many years before their alleged invention. Instead of constituting an important advance in the art, as the Court of Appeals held, the patent in suit added nothing whatsoever to existing photographic knowledge.*

To hold under these circumstances that there was invention in the patented process is clearly contrary to this Court's decision on the subject of invention in the *High Vacuum Tube Case, supra.* The Court of Appeals has ap-

---

* The authority of the statements of petitioner's expert, Jones, on this subject, is of the highest order, but Jones' testimony was wholly ignored by the Court of Appeals. Jones is the head of the Physical Research Laboratory of the Eastman Kodak Company. He testified as follows (Vol. I, pp. 166, 167):

"Q. 103. Does the process of the patent in suit involve any photographic operations which are not involved in the ordinary art of composite printing, and if it does involve some additional operations, tell us what they are? A. *It involves nothing other than that known in the art of composite printing.*

"Q. 104. How about in composite printing using and subjecting the two negatives to different lengths of development? Was that done or was it not done? A. *Very common.*

"Q. 105. Did you do that composite printing yourself prior to April, 1921? A. Yes, I have often made prints, printing in clouds into landscapes without the clouds and other types of composite printing. *It was commonly used in pictorial photography.*

"Q. 106. How early did you do that? How far back did you do that work yourself? A. Oh, I imagine about in *1900.*

"Q. 107. And the Eastman Company, did it have

plied a standard of invention entirely out of line with the standard set by this Court, which should have been followed.

We most sincerely believe and urge that the Court of Appeals has erroneously invaded the field of the craftsman or engineer and in so doing has violated the established rules of law which set that field apart from the field of invention. The value of our patent system depends on a nice adjustment between invention and technical skill. While it is for the public interest that inventors should be confirmed in "the exclusive right" "for limited times" to "their respective discoveries", it is equally important that patentees should not be allowed to encroach upon the public domain by claiming as inventions improvements which are the result of mere skill or enterprise and, hence, within the right of any one to use. This Court has recognized these considerations in the decision in the *High Vacuum Tube*

> any experience, so far as you know, with composite printing prior to April, 1921? A. *Well, of course, the art and practice of composite printing has been so general that the Kodak Company has made materials which have been used for that purpose, in many cases special materials for the practice of combination printing.*
>
> "Q. 108. Now, will you state the steps involved in making composite prints such as you did them prior to 1921, and such as Eastman did them prior to 1921, beginning with the making of the separate records? A. *Well, two or more negatives are exposed, either on the same or different objects. These exposed negative materials are then developed separately in such a way as to give images of the character required for the subsequent operation of making the combination print. These are then printed together on a single piece of photographic material. They may be either adjacent, juxta-posed, or superposed, in register, on the same face or on opposite faces, as the case may be. There are any number of possibilities of combining the negatives in making combination printings.*"

Case, supra, in which a high standard of invention was established. That high standard should be maintained.*

We, therefore, submit that this Court should reaffirm its wise general rule and end such relaxation thereof as has occurred in the decisions in this and the closely related case in the Third Circuit.

(b) In the *High Vacuum Tube Case, supra,* this Court also said (p. 685):

> "*Only when invention is in doubt may advance made in the art be thrown in the scale to support it.* If we were to assume that invention here was doubtful, we can find little to suggest that the high vacuum tube when produced satisfied a long felt want or that its present utility is indicative of anything more than the natural development of an art which has passed from infancy to its present maturity since Langmuir filed his application."

In the present case the Court of Appeals said (Vol. III, pp. 1225, 1226):

> "The problem sought to be solved by the patent was bringing together on one positive film the picture record, which requires one type of development, and a sound record which requires a different type of development. Its accomplishment marked an important advance in the art."

We have shown in the petition that no such problem existed, and that there was no room for the exercise of invention in this old, highly developed, and crowded art of composite printing. Under these circumstances, it is clear that the Court of Appeals departed radically from the rule just quoted from this Court's opinion in the *High Vacuum Tube Case.*

---

* Other cases are: *Electric Cable Joint Co.* v. *Brooklyn Edison Co.,* 54 S. Ct. 586; *Saranac Corp.* v. *Wirebounds Patents Co.,* 282 U. S. 704; *Thompson Spot Welder Co.* v. *Ford Motor Co.,* 265 U. S. 445; *Carbice Corp.* v. *American Patents Development Co.,* 283 U. S. 420, 422; and *Hollister* v. *Benedict,* 113 U. S. 59, 73.

The Court of Appeals also stressed the extensive commercial use of the alleged invention, stating, (Vol. III, p. 1226), that its universal use "speaks for the merit of the inventive thought therein involved", and (Vol. III, p. 1228):

> "The commercial use of the patented process is fullsome testimony of its inventive worth. The result of testing it by the inquiry, as it should be, of what has been the commercial success of the invention rather than the appellant's commercial success, adds greatly to its validity."

The District Court found as facts (Vol. III, p. 1202):

> "*No commercial success is shown by the plaintiff and the patentees made no real contribution to the art. The success of the defendant, its licensor and its licensees, is due to the many inventions of the Western Electric Company, without which success would have been impossible.*"

The process of the patent in suit had nothing whatsoever to do with the success of talking motion pictures. That success was due to developments in the electrical art made in this country, principally by the research engineers associated with the American Telephone & Telegraph Co. and the General Electric Co., and their respective affiliated companies, without which the high quality sound recording and reproduction essential to success could not be attained. These developments are discussed in the petition for rehearing submitted to the Court of Appeals in this case to which petition we direct this Court's attention (Vol. III, p. 1239).

This Court has frequently held, not only that extensive commercial use is an unsafe guide on the question of invention, but also that it cannot be relied upon to turn the scale in favor of the patent unless invention is in doubt. *Duer* v. *Corbin Cabinet Lock Co.*, 149 U. S. 216, 223, and *McClain* v. *Ortmayer*, 141 U. S. 419, 428, 429. The Court

of Appeals clearly violated this rule. It is also important to observe that the Court of Appeals could not attribute any of the extensive use of the alleged invention to any commercial activity of the patentees or of the respondent. It, therefore, adopted as a corollary of the rule it assumed to apply, without citing any precedent therefor, that the determining factor is not the patentee's or patent owner's commercial success but the commercial success of the alleged invention.

The decision below is such a radical departure from the rules established by this Court on the subject of invention that the decision should be promptly reversed by this Court.

III. The decision of the Court of Appeals is in conflict with the decisions of this Court in *Brown* v. *Piper*, 91 U. S. 37, *Penn. Railroad* v. *Locomotive Truck Co.*, 110 U. S. 490, *Dreyfus* v. *Searle*, 124 U. S. 60, and other cases, which hold that a valid process patent cannot be based on the application of an old process to a new subject, with no change in the manner of application, and no result substantially distinct in its nature.

The District Court found (Vol. III, p. 1199):

> "It was everyday practice in the motion picture industry, as early as 1908, to print on standard positive film composite pictures from separately developed negatives.
>
> "See testimony of Nonnenbacher, and Meester patent No. 1,286,383; British patent to Rossi, No. 21,467 A. D. 1902; and British patent to Downing, No. 6,727 A. D. 1913."

In addition to the prior patents mentioned, the District Court was referring here to the prior use of the Biograph

Company, which, at least as early as 1908 in making motion pictures, took two series of pictures, each on separate motion picture films, developed them separately in a manner appropriate for each, and printed them on the same side of the same positive film (Nonnenbacker, Vol. I, 128-134). The Court of Appeals completely ignored this prior use and also unsoundly distinguished the prior Rossi British patent referred to above, which disclosed a similar process, on the ground that that patent does not "disclose any process whereby the single positive film may be produced with *sound* and picture sequences after development of each to their respective requirements" (Vol. III, p. 1229). *The Court of Appeals disregarded the essential fact that the sound record is merely another photograph.*

If the anticipating prior art referred to in the petition (*supra*, p. 9), in which separately recorded and separately developed sound and picture records were printed on the same positive film, be disregarded, nevertheless the Court of Appeals should have found the patent in suit invalid under the rule established in the cases cited in the heading. The process used by the Biograph Company was not changed in any way when it was adopted by the patentees of the patent in suit. Indeed, it even takes a stretch of the imagination to say that the patentees applied the Biograph process to a new subject, the sole difference in what they did being that the pictures (exposure of the photographic emulsion to the action of light) of persons, things and places on one of the films were replaced by pictures (exposure of the photographic emulsion to the action of light) representing sound waves. In the opinion, the Court of Appeals itself refers to the sound record as "a photographic **picture** of sound waves" (Vol. III, p. 1229).

In the Biograph practice there were two photographs of things, each on a separate film, which were combined by printing on the same side of a single positive film. In the instant case, there were again merely two photo-

graphs, one of things, and one of sound, which were combined in the same way by the same operations. The real problem was to translate the sound waves faithfully into electrical variations and then amplify them faithfully so that a good photograph corresponding to the sound could be taken. The patent in suit had nothing to do with that. Once such a photograph of the sound was available, the prior art clearly taught all the operations necessary to produce the composite print.

To sustain a process patent, it is not enough that the product produced by the process may be different in some respect from that produced by a former process. **The process itself must possess novelty.** In the leading case of *Brown* v. *Piper*, 91 U. S. 37, the patent in suit was for a process of preserving fish. Referring to a prior patent, this Court said (p. 41):

> "Here was the application of the requisite degree of cold exactly in the manner called for in the specification of the appellee.
>
> "This is hardly denied; but it is insisted that the process was never applied by the witness to the preservation of fish and meats.
>
> "The answer is, that this was simply the application by the patentee of an old process to a new subject without any exercise of the inventive faculty, and without the development of any idea which can be deemed new or original in the sense of the patent law. The thing was within the circle of what was well known before, and belonged to the public. No one could lawfully appropriate it to himself, and exclude others from using it in any usual way for any purpose to which it may be desired to apply it."

And, in *Penn. Railroad* v. *Locomotive Truck Co.*, 110 U. S. 490, where the patent in suit was for trucks for railway cars, this Court said (p. 494):

> "It is settled by many decisions of this court, which it is unnecessary to quote from or refer to in detail, that the application of an old process or machine to a similar or analogous subject, with no change in the

> manner of application, and no result substantially distinct in its nature, will not sustain a patent, even if the new form of result has not before been contemplated."

The decision in *Dreyfus* v. *Searle,* 124 U. S. 60, 63, is to the same effect. And, in *Concrete Appliances Co.* v. *Gomery,* 269 U. S. 177, 184, 185, this Court recently held:

> "Failure to make use of these obviously applicable *methods* and appliances in combination, suitable to the particular work in hand, in dealing with a new plastic material capable of similar treatment, would, we think, have evidenced a want of ordinary mechanical skill and of familiarity with construction problems and *methods.*"

The decision of the Court of Appeal is in sharp conflict with these decisions, and should, therefore, be overruled.

IV. The decision of the Court of Appeals is in conflict with the decisions of this Court in *Railway Co.* v. *Sayles,* 97 U. S. 554, *Pattee Plow Co.* v. *Kingman,* 129 U. S. 294, and other cases, the Court of Appeals having sustained the validity of claims 8 and 9, which are for a different and broader alleged invention from that of the application as filed, the application having been unlawfully expanded during its long pendency in the Patent Office to cover the commercial art which had developed in the meantime.

The District Court found (4 F. Supp. 464; Vol. III, p. 1178):

> "More than nine years elapsed between the date of the filing of the application in question in the United States Patent Office and the date of the granting of the patent in suit, and the claims in suit were introduced by amendment dated **July 15, 1931.**

"During that long period of time the defendant and the Western Electric * * * engaged extensively in the commercial distribution of said Western Electric talking motion picture sound recording and reproducing systems."*

And, (4 F. Supp. 466; Vol. III, p. 1184):

"The original specifications were amended to state that the separate development step might be eliminated.

"This amendment invalidated the two-step claims [claims 8 and 9], as a separate development to overcome under and over exposure of the different picture scenes was the most important part of the disclosure, and by its elimination the invention claimed therein was different and broader than the one disclosed by the patentees in their application as filed."

And, (4 F. Supp. 469; Vol. III, pp. 1194, 1195):

"Further, the two-step claims in suit and the broadening amendments were not inserted until July 15, 1931, and that was long after the process had gone into public use, and such an attempt should be regarded by the courts with disfavor. *Chicago & N. W. Railway Co.* v. *Sayles,* 97 U. S. 554, 563, 24 L. Ed. 1053.

"Plaintiff contends that it made a two-step claim as early as July, 1925, which was when it found the De Forest patent, but even then it was **new matter** and was not accompanied by the broadening amendments to the specification inserted **July 15, 1931.**"

The prosecution of the application for the patent in suit is subject to the same objections as that of the patents involved in *De Forest Radio Co.* v. *General Electric Co.,* 283 U. S. 664, and *Powers-Kennedy Co.* v. *Concrete Co.,* 282 U. S. 175, 178. In the former case this Court said (p. 675):

"The application, filed October 16, 1913, was pending for twelve years before it was issued October 20,

* The process was used by the leading motion picture producers before 1931.

> 1925, a period which witnessed the most important beginnings and many of the chief developments of the radio art."

And, in the latter case (p. 178):

> "The application was filed in the Patent Office on January 14, 1907. Its prosecution was most dilatory. Claims made were repeatedly disallowed * * *. Radical changes were made in the statement of invention and radically new claims were made in 1911 and expanded in 1913."

Here, claims 8 and 9 of the patent in suit, which are broader than the alleged invention of the application as filed, were not inserted in the application until July 15, 1931 (Vol. II, p. 542), long after the alleged invention had gone into extensive public use. And the broadening amendments to the specification, which state that the separate development—the gist of the original disclosure—may be omitted, were introduced at the same late date (Vol. II, p. 540). Compare the specification as originally filed (Appendix A) and the specification of the patent as issued (Vol. II, p. 468).

The decision of the Court of Appeals, sustaining claims 8 and 9, is in direct conflict with the decisions of this Court in *Railway Co.* v. *Sayles*, 97 U. S. 554, and *Pattee Plow Co.* v. *Kingman*, 129 U. S. 294. In the former case this Court said (p. 563):

> "It will be observed that we have given particular attention to the original application, drawings, and models filed in the Patent Office by Thompson and Bachelder. We have deemed it proper to do this, because, if the amended application and model, filed by Tanner five years later, embodied any material addition to or variance from the original,—any thing new that was not comprised in that,—such addition or variance cannot be sustained on the original application. *The law does not permit such enlargements of an original specification, which would interfere with*

other inventors who have entered the field in the meantime, any more than it does in the case of reissues of patents previously granted. Courts should regard with jealousy and disfavor any attempts to enlarge the scope of an application once filed, or of a patent once granted the effect of which would be to enable the patentee to appropriate other inventions made prior to such alteration, or to appropriate that which has, in the meantime, gone into public use.''

As stated in the above quotation, the same rule maintains in the reissue cases in which this Court has frequently held reissue patents invalid because for an invention different from and broader than the original. *Pattee Plow Co.* v. *Kingman*, 129 U. S. 299, is such a case, in which the facts closely resemble those here. This Court held (p. 299):

> "There is, therefore, an omission in the latter combination, which tends, by reducing the number of elements, to render its scope less narrow than that of the original. * * *
>
> "* * * it is well settled that a reissue can only be granted for the same invention intended to be embraced by the original patent, and the specification cannot be substantially changed, either by the addition of new matter or the omission of important particulars, so as to enlarge the invention as intended to be originally claimed."

The erroneous decision of the Court of Appeals, sustaining the broad claims 8 and 9, permits the respondent to claim a broad monopoly of all motion picture films on which sound and picture records are printed from separate simultaneously recorded sound and picture negatives, and notwithstanding the patentees' application as originally filed was not an application for any such invention. We respectfully submit that this fact alone should induce this Court to review this case and remove the conflict with the cases cited.

V. The decision of the Court of Appeals is in sharp conflict with the very recent decision of the Court of Appeals for the Sixth Circuit in *Fruehauf Trailer Co.* v. *Highway Trailer Co.*, 67 F. (2) 558. The Court of Appeals in the present case gave validity to the disclaimer by which claims 6 and 7 were amended and rewritten, a purpose which the disclaimer statute was not intended to permit.

In 1930 this Court granted a writ of certiorari in *Ensten et al* v. *Simon, Ascher & Co., Inc.*, 282 U. S. 445, because of the conflict of decisions of the Second and Seventh Circuit Courts of Appeal as to the meaning of the disclaimer statutes (R. S. 4917 and 4922; 35 USC 65 and 71, printed in Appendix B). The question raised was as to how soon after a decision of a court, holding a patent claim invalid from which decision no appeal is taken, the patentee must file his disclaimer to save the remainder of his claims from invalidity. This Court decided under the particular facts of the case that the patentee had unreasonably delayed and had, therefore, not brought himself within the beneficent provisions of the statute.

The disclaimer involved in that case was a disclaimer of an entire claim. The Court did not have before it the type of disclaimer which is involved here. The disclaimer statutes were intended to permit a patentee to disclaim an entire claim but patentees, especially in recent years, have not been content to do merely that. *Under the guise of disclaimer, they have, as here, amended their claims without disclaiming them, so as in effect to make for themselves a new patent, a purpose which the disclaimer statute was not intended to permit, as the District Court held in the present case.*

Here, the patentees under the guise of disclaimer amended claims 6 and 7, which were two step claims for exposing and printing only and clearly invalid over the prior art, by inserting a third step, namely separate development thereby making an entirely new claim which has never been passed upon by the Patent Office. (See the disclaimer, Appendix C). Furthermore, the disclaimer was not filed until five days before the trial began, more than ten years after the application was filed, and more than a year after the patent issued. This was after the respondent had been fully informed of petitioner's process and of all the prior art which was to be relied upon. The Court of Appeals sustained these claims, thus giving effect to the disclaimer, as did also the Court of Appeals for the Third Circuit give effect to the same vicious type of disclaimer in the related case in the Third Circuit. (See petition and brief in that case, pp. 16, 25).

The issue, as to whether a patentee may employ the disclaimer statutes to make for himself a new patent, is thus sharply drawn between the decisions of the Second and Third Circuits in the instant cases and that of the Sixth Circuit in *Fruehauf Trailer Co.* v. *Highway Trailer Co.*, 67 F. (2d) 558. The latter court held (pp. 559, 560):

> "The enactment of Rev. St. § 4917 (35 USCA § 65), was never intended to permit the revamping and rephrasing of claims to the end that they might cover structures upon which they did not before read, or to the end that, by the addition of a new element in combination, the disclaimer might validate a claim which would otherwise be invalid under the prior art. This is not limiting the combination already claimed; it is in effect claiming a new and a different combination, [citing cases]. The function of a disclaimer is well stated in the leading case of Hailes v. Albany Stove Co. 123 U. S. 582, 587. * * * It must cover 'a separate claim in a patent, or some other distinct and separable matter, which can be exscinded without mutilating or changing what is left standing.' *It cannot be used to change the character of the invention,*

> *or, in effect, to make for the patentee a new patent. This is fundamental.* • • •
>
> *"Tested by these standards, both disclaimers are invalid."* •

The question now raised was also raised in the case of *Thropp's Sons Co.* v. *Seiberling*, 264 U. S. 320, 330, 331, decided in 1924, but unfortunately this Court did not pass upon the matter, having found the patent invalid for lack of invention.

In the *Ensten Case, supra*, this Court said (p. 452):

> "Escape [under the statute] is permitted only to one who acted originally in good faith and who has complied with the prescribed condition".

And, this Court pointed out (p. 453), that if the delay which the Court condemned, was permitted—

> "• • • a patentee having procured allowance of an invalid claim may hold it in the face of the public for years (here nearly two years) with large possible advantage to himself and much injury to others. By the assertion of his apparent monopoly he may deter others from legitimate action and seriously prejudice the public."

We respectfully submit that the vicious abuse and misuse of the disclaimer statute, which we are here asking this Court to end, is even more prejudicial to the public than that condemned in the *Ensten Case*. The disclaimer statutes were never intended to permit a patentee to amend and rewrite his claims so as to make for himself a new patent, without any supervision of the Patent Office to which alone Congress delegated the authority of issuing

---

• Other authorities are Walker on Patents, 6th Ed., p. 334; *Gen. Motors Corp.* v. *Rubsam Corp.*, 65 F. (2d) 217 (C. C. A. 6); *Linville* v. *Milberger*, 34 F. (2d) 386, 390 (C. C. A. 10); *Enameled Metals Co.* v. *Western Conduit Co.*, 269 Fed. 620, 624, 629 (C. C. A. 6); *Frigidaire Corp.* v. *General Necessities Corp.*, 32 F. (2d) 277, 278.

patents for inventions. The conflict of decisions which now exists, as well as the importance to the public of obtaining the authoritative decision of this Court on this question of statutory construction, are persuasive reasons for the allowance of the writ.

VI. The opinion of the Court of Appeals is in conflict with the decision of this Court in *Haughey* v. *Lee*, 151 U. S. 282, and other decisions of the federal courts.

The Court of Appeals said and held (Vol. III, p. 1228):

> "The Western Electric Co. scientist, Dr. Wente, applied for a patent disclosing and claiming the invention of the patent in suit. * * *
>
> "And after that experience, it is now argued, by the Western Electric Co. which is defending this suit, that there is no validity. **That Company is hardly in a position to question validity of the patent.** *DuBois* v. *Kirk*, 158 U. S. 58; *General Knit Fabric Co.* v. *Steber Machine Co.*, 194 Fed. 99 (C. C. A. 2); *Sugar Apparatus* v. *Yaryan*, 43 Fed. 140, 144."

In the petition for rehearing in this case (Vol. III, pp. 1244, 1245), which was denied, we requested the Court of Appeals to correct the dangerous precedent which its decision thus established. We pointed out the direct conflict with *Haughey* v. *Lee*, 151 U. S. 282, and the erroneous citation of *DuBois* v. *Kirk*, 158 U. S. 58, which holds merely that a defendant, who is using an invention, cannot deny its **utility**, and not that a defendant, who at one time claimed the same invention, cannot deny **validity**.

We quote from the opinion in *Haughey* v. *Lee*, 151 U. S. 282, 285:

> "There is no merit in the proposition made in the second assignment of error, that defendants are estopped from asserting that there is no patentable

> novelty in plaintiff's invention, by their conduct in seeking to procure, through one of their employes, a patent for substantially the same invention. Whether or not there is any inconsistency in trying, at one time, to get a patent for a supposed invention, and in afterwards alleging, as against a rival successful in obtaining a patent, that there is no novelty in the invention, it certainly cannot be said to constitute an estoppel. *Besides the defense of want of patentable invention in a patent operates not merely to exonerate the defendant, but to relieve the public from an asserted monopoly, and the court cannot be prevented from so declaring by the fact that the defendant had ineffectually sought to secure the monopoly for himself.*"*

The decision of the Court of Appeals is tantamount to a holding that invention can be created by estoppel, which leaves out of account entirely the public interest and precludes the court from exercising its judicial function of deciding the question of invention as required by law. There could be no true estoppel in any event in this case because the defendant is the Paramount Company, and the Wente application was filed by the Western Electric Company, whose subsidiary, Electrical Research Products, Inc., is defending the case, although not a party defendant.

The present case demonstrates the soundness of this Court's holding in Haughey v. *Lee, supra. The decision of the Court of Appeals would prejudice substantially the*

---

* The decision of the Court of Appeals is also in conflict with the following decisions of the federal courts: *Osgood Dredge Co.* v. *Metropolitan Dredging Co.*, 75 Fed. 670, 673 (C. C. A. 1); *McCloskey* v. *Toledo Pressed Steel Co.*, 30 F. (2d) 12 (C. C. A. 6), in which certiorari was denied, 280 U. S. 556; *Allbright-Nell Co.* v. *Autosteam Process Co.* (C. C. A. 7), 21 U. S. Patent Quarterly 401, not yet officially reported; and *Smokador Mfg. Co.* v. *Tubular Co.*, 25 F. (2d) 948 (D. C. Conn.). See also *Hill* v. *Wooster*, 132 U. S. 693, 698, and *Palmer Tire Co.* v. *Lozier*, 90 Fed. 732 (C. C. A. 6), involving the similar question arising under R. S. 4918 (35 U. S. C. 66).

entire motion picture industry of this country, merely because a single concern filed a patent application for the same alleged invention. It is of great importance to the motion picture industry, and to the general public that the District Court, which disposed of this matter in the following way, should be upheld (4 F. Supp. 465, 466):

> "The plaintiff urges that defendant cannot with good grace contest patentability, in view of the application of Wente, a research engineer of the Western Electric Company, to which he assigned such application; but this contention was not sustained. Wente did make broad claims as is customary, [*Westinghouse Co.* v. *Formica Co.*, 266 U. S. 342, 354, 355; Walker on Patents (6th Ed.), p. 191] but those broad claims were canceled on the first amendment, and as I believe on Greensfelder [Patent No. 1,254,684, *supra*, pp. 7, 9], rather than on the Vogt British patent. In any event, claims similar to some of the Wente claims so canceled were made by Craig [Patent No. 1,260,337, *supra*, p. 9], in 1913, and canceled as unpatentable at that time.
>
> "The claims of the patent granted to Wente are limited [Wente patent No. 1,656,255, Vol. II, p. 641], and I do not see how his application prejudices the defense in this action."

This Court should reverse the decision of the Court of Appeals because it is contrary to sound judicial policy on this point, and also because it is in direct conflict with Haughey vs. *Lee, supra, and with the decisions in other Circuits, which we have cited.*

VII. The case involves an important question of patent law arising under the amendment of March 3, 1903 (32 Stat. L. 1225) to R. S. 4887 (35 USC 32), which should be settled by this Court. The question—also raised in the related case in the Third Circuit—is, what is the correct rule of law to be applied under the statute, as amended, to determine whether a prior foreign patent to the same patentees, filed more than twelve months before the United States patent, is or is not for *the same invention* as the United States patent.

The pertinent part of the statute, as amended, is quoted below.*

The object of the statute is to synchronize the patent system of this country with those of other countries so that United States patents will not monopolize here inventions which have been freed from patent monopoly abroad.

Prior to the amendment of 1903, the statute provided that a United States patent should expire at the same time as the foreign patent to the same patentees for the same invention, or, if there be more than one such foreign patent, at the same time with the one having the shortest term. The statute in that form was last applied by this

---

* "No person otherwise entitled thereto shall be debarred from receiving a patent for his invention or discovery, nor shall any patent be declared invalid by reason of its having been first patented or caused to be patented by the inventor or his legal representatives or assigns in a foreign country, unless the application for said foreign patent was filed more than twelve months, in cases within the provisions of section forty-eight hundred and eighty-six of the Revised Statutes, * * * prior to the filing of the application in this country in which case no patent shall be granted in this country."

Court in 1915 in *Fireball Gas Tank & Illuminating Co.* v. *Commercial Acetylene Co. et al.*, 239 U. S. 156, and prior to that it was applied in several cases, including *Leeds & Catlin* v. *Victor Talking Mach. Co.*, 213 U. S. 301 (1909); *Commercial Mfg. Co.* v. *Fairbank Canning Co.*, 135 U. S. 176 (1890); and *Siemens* v. *Sellers*, 123 U. S. 276 (1887).

Relying on the *Leeds & Catlin Case* and the *Fireball Case, supra*, the Court of Appeals held (Vol. III, pp. 1231, 1232), that French patent No. 532,750 (Vol. III, pp. 936, 938), granted to the patentees of the patent in suit on Nov. 21, 1921, upon an application filed March 25, 1921, which is more than twelve months prior to March 29, 1922, the filing date in this country of the application for the patent in suit, is not for **the same invention** as the patent in suit and, therefore, does not invalidate the patent in suit under the statute. The District Court found otherwise. The facts are fully stated in that court's opinion (Vol. III, pp. 1202-1205), and show clearly that the French patent is for the same invention.*

---

* The most pertinent parts of the *resumé* of the French patent are as follows (Vol. III, p. 941):

> "This invention refers to a photo-phonetic film to accompany images or pantomime, produced by transverse light markings, and showing the following characteristic features which can be taken advantage of either separately or *in combination:* * * *
>
> 2. *Its impression, simultaneous with the original motion picture recording, by sound sources which are not scenic (or, at least, are only partially scenic)*; * * *
>
> 5. *The copying of two series of photograms of the picture and accompaniment films on the same film band;* * * *

Thus there is claimed *in combination* under 2, simultaneous recording of sound and pictures on separate films, which, being separate, are of necessity separately developed (Vol. I, pp. 92, 189, 190, 452), and, under 5, printing of the two films on one positive film.

The District Court construed the statute as follows (Vol. III, p. 1205):

> "What is required to constitute identity of a patent within the purview of Section 4887 is substantial not formal identity of invention, as covered by the claims."

The Court of Appeals applied a much stricter rule, as follows (Vol. III, p. 1231):

> "To constitute invalidity of the present patent by the French application, it must be shown that the inventions actually **claimed** in that foreign country and those of the patent in suit are **identical.**"

In other words if the inventions are substantially the same, but the claims are not "identical", the patenting abroad does not invalidate, according to the Court of Appeals. It is clear that the Court of Appeals erred and that the patent in suit is invalidated by the French patent. In applying the statute in the cases cited, certainly this Court did not intend to subordinate substance to form. Nevertheless, that is the practical result of the interpretation which the Court of Appeals placed upon those decisions.

In its attempt to distinguish the French patent, the Court of Appeals stated that it did not disclose the step of separate development (Vol. III, p. 1232). But the record shows that the separately recorded records of the French patent are of necessity separately developed (Vol. I, pp. 92, 189, 190, 452). Moreover, the Court of Appeals sustained claims 8 and 9, which omit entirely the separate development step, and the two other steps of these claims are fully set forth in the *resumé* of the French patent.

Furthermore, French patents, like Italian and some other foreign patents, have no formal claims as do United States patents. Under such circumstances, as was held by Judge Severens in *Western Electric Co.* v. *Citizens*

Telephone Co., 106 Fed. 215, in applying the statute as against an Italian patent (p. 218):

> "The question, then, is whether the Eldred invention covered by his home patent was patented by the one taken out in Italy * * * where formal claims are dispensed with, the matter of the invention is gathered from the specifications and the drawings or models. A careful study of the Eldred Italian patent leaves no doubt that it does embody the very matter of many of the claims in his home patent; * * *"

And the same is true of the French patent here involved.

The object of the statute has not been achieved in this case. We, therefore, submit that this Court should state for the benefit of the public as a whole the rule of law to be applied by the subordinate federal courts under the statute in its present amended form.

Conclusion.

The petition in this case is based upon questions of vital and far-reaching industrial and public importance, which have been decided by a divided Court of Appeals contrary to the principles of law laid down by this Court as guides in protecting the public against unwarranted monopoly.

It is earnestly urged that the petition be granted.

Respectfully submitted,

CHARLES NEAVE,
HENRY R. ASHTON,
Counsel for Petitioner.

August, 1934.

APPENDIX A.

The Specification of The Application for the Patent in Suit as Originally Filed in the United States Patent Office on March 29, 1922.

"In the production of speaking films it is of great advantage especially from the point of view of use, to arrange the sound sequence and the picture sequence upon one and the same material separate (film).

"In this procedure, however, there frequently occur in consequence of the changing lighting conditions in the cinematographing process, changes in the degree of light and the bromide of silver layer, and this causes the picture sequence to be either overlighted or underlighted.

"As the same film, however, bears close to the picture sequence the continuously normally lighted sound sequence, these differences cannot be removed in the case of combined negatives, by developing, weakening, strengthening and so forth.

"They can only be removed by subjecting the underlighted or the overlighted negative places to separate corresponding treatment.

"Technically, this treatment is practically impossible so long as the two sequences are photographed upon the same film.

"According to the present invention the difficulty is overcome by either employing entirely separate films for the production of the negatives, or films which are connected during the photographing, but which are separated from one another before the developing.

"The synchronism is assured in both cases by the perforations and by corresponding marks. The production of the positive films can take place by copying the two negative films preferably consecutively upon the same positive films.

"One can, however, also unite previously the two negative films longitudinally together, and then copy this so united negative in the usual manner."

APPENDIX B.

The Disclaimer Statutes.

"Whenever, through inadvertence, accident, or mistake, and without any fraudulent or deceptive intention, a patentee has claimed more than that of which he was the original or first inventor or discoverer, his patent shall be valid for all that part which is truly and justly his own, provided the same is a material or substantial part of the thing patented; and any such patentee, his heirs or assigns, whether of the whole or any sectional interest therein, may, on payment of the fee required by law, make disclaimer of such parts of the thing patented as he shall not choose to claim or to hold by virtue of the patent or assignment, stating therein the extent of his interest in such patent. Such disclaimer shall be in writing, attested by one or more witnesses, and recorded in the Patent Office; and it shall thereafter be considered as part of the original specification to the extent of the interest possessed by the claimant and by those claiming under him after the record thereof. But no such disclaimer shall affect any action pending at the time of its being filed, except so far as may relate to the question of unreasonable neglect or delay in filing it (R. S. 4917; 35 U. S. C. 65).

"Whenever, through inadvertence, accident, or mistake, and without any willful default, or intent to defraud or mislead the public, a patentee has, in his specification, claimed to be the original and first inventor or discoverer of any material or substantial part of the thing patented, of which he was not the original and first inventor or discoverer, every such patentee, his executors, administrators, and assigns, whether of the whole or any sectional interest in the patent, may maintain a suit at law or in equity, for the infringement of any part thereof, which was *bona fide* his own, if it is a material and substantial part of the thing patented, and definitely distinguishable from the parts claimed without right, notwithstanding the specifications may embrace more than that of which the patentee was the first inventor or discoverer. But in every such case in which a judgment or decree shall be

rendered for the plaintiff, no costs shall be recovered unless the proper disclaimer has been entered at the Patent Office before the commencement of the suit. But no patentee shall be entitled to the benefits of this section if he has unreasonably neglected or delayed to enter a disclaimer (R. S. 4922; 35 U. S. C. 71).

APPENDIX C.

Disclaimer.

(Filed in Patent Office on Nov. 23, 1932.)

To the Hon. Commissioner of Patents:

Your petitioner, American Tri-Ergon Corporation, a corportaion organized and existing under the laws of the State of New York and having a place of business in the City, County and State of New York, represents that in the matter of certain improvements in Process for Producing Combined Sound and Picture Films, for which Letters Patent of the United States No. 1,825,598 were granted on September 29, 1931, to said American Tri-Ergon Corporation, as assignee by mesne assignments of the inventors, Hans Vogt, Joseph Massolle and Josef Engl, said corporation is the owner of the entire right, title and interest under an assignment dated June 6, 1930 and recorded in the Transfers of Patents of the United States Patent Office, July 3, 1930, Liber T 144, pages 192 to 199, and other assignments referred to in said assignment, and that your petitioner has reason to believe that through inadvertence and without any fraudulent or deceptive intention, the specification and claim of said Letters Patent are too broad, including that of which said inventors were not the first inventors. Your petitioner therefore hereby enters this disclaimer to that part of the claim which it

does not choose to claim or hold by virtue of the patent or said assignments, to wit:

(a) The process as set forth in claim 6, except wherein the picture and sound negatives are separate films at the time of development.

(b) The process as set forth in claim 7, except wherein the sequence of pictures is photographed upon a film separate from that upon which the sequence of sounds is photographed, and the picture and sound negatives are separately developed, in a manner appropriate for each, and are consecutively printed upon the same sensitized film.

Signed at New York, in the County of New York, and State of New York, this 22 day of November, 1932.

AMERICAN TRI-ERGON CORPORATION
By (Signed) WM. FOX
WILLIAM FOX

(Corporate Seal)

Witness:

DANIEL G. ROSENBLATT

FILE COPY

FILED
AUG 6
CHARLES ELMORE

IN THE

Supreme Court of the United States.

OCTOBER TERM, 1934.

No. 254

PARAMOUNT PUBLIX CORPORATION,

Petitioner,

vs.

AMERICAN TRI-ERGON CORPORATION,

Respondent.

ON PETITION FOR A WRIT OF CERTIORARI TO THE CIRCUIT COURT OF APPEALS FOR THE SECOND CIRCUIT.

OPINIONS

Of the Courts Below in This Case.

	PAGE
District Court's Opinion	1
Court of Appeals' Opinion	29

e Evening Post Job Printing Office, Inc., 154 Fulton St., New York, N. Y.

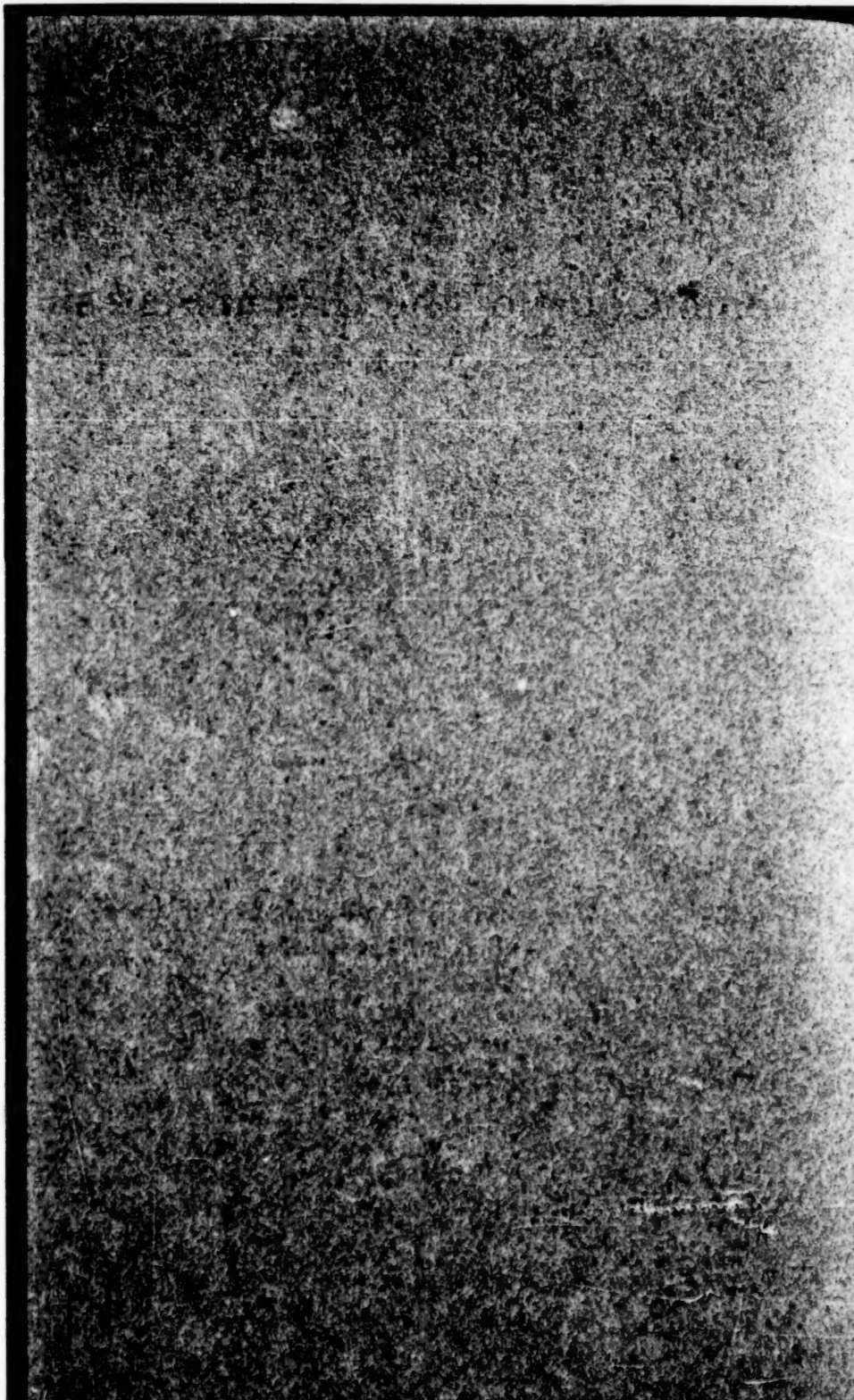

The Opinion of the District Court, Reported in 4 F. Supp. 462.

United States District Court,

EASTERN DISTRICT OF NEW YORK.

American Tri-Ergon Corporation, Plaintiff, vs. Paramount Publix Corporation, Defendant.	Equity 5800 August 14, 1933.

Ward, Crosby & Neal, solicitors for plaintiff; S. Mortimer Ward, Jr. and Page S. Haselton, of counsel.

Charles Neave, Henry R. Ashton, W. J. Barnes, F. T. Woodward, and E. J. Driscoll, counsel for defendant.

Campbell, *D. J.*

Plaintiff brings this suit against the defendant for relief by injunction and damages for the alleged infringement by the defendant, at its studio in Long Island City, of patent No. 1,825,598, issued to Vogt, Massolle and Engl, by mesne assignments to the plaintiff, for Process of Producing Combined Sound and Picture Films, granted September 29, 1931, on application filed March 29, 1922, corresponding to German Application No. V. 16431 VI/57 a2, filed April 14, 1921. This has been held by the Patent Office to be the effective date under the International Convention.

No evidence was offered showing any commercial activity of the plaintiff, or of any one operating under license from it.

The defendant is a well known motion picture producer.

This suit is being defended by Electrical Research Products, Inc., the wholly owned subsidiary of the Western Electric Company, formed to take over the commercial distribution of the Western Electric talking motion picture sound recording and reproducing systems which were developed by the research laboratories of the Western Electric and American Telephone & Telegraph Companies.

The defendant is licensed by the Research Products, Inc. to record for talking pictures by means of the Western Electric system, and has from the beginning used that system and apparatus.

The defendant has by answer interposed the defenses of invalidity and noninfringement.

This suit is based on claims 5 to 9, both inclusive, and claim 11 of the patent in suit, but claims 6 and 7 are to be read with the Disclaimer, filed November 23, 1932.

Said claims and disclaimer read as follows:

> "5. A process for producing a combined sound and picture positive film, for talking moving pictures, comprising, photographing a sequence of pictures on one length of film, and simultaneously photographing on another length of film a corresponding sequence of sounds accompanying the action, separately developing the two negatives in a manner appropriate for each, and printing the sound and picture negatives respectively upon different longitudinally extending portions of the same sensitized film, to form the sound sequence at one side of and along the picture sequence.
>
> 6. A process for producing a combined sound and picture positive film, for talking moving pictures, comprising, photographing a sequence of pictures on one length of film, and simultaneously photographing on another length of film a corresponding sequence of sounds accompanying the action, so that the picture and sound negatives may be separately developed in a manner appropriate for each, and printing the

sound and picture negatives respectively upon different longitudinally extending portions of the same sensitized film, to form the sound sequence at one side of and along the picture sequence.

7. A process for producing a combined sound and picture positive film, for talking moving pictures, comprising, photographing a sequence of pictures on one length of film, and simultaneously photographing on another length of film a corresponding sequence of sounds accompanying the action, so that the picture and sound negatives may be separately developed in a manner appropriate for each, and printing the sound and picture negatives respectively upon the same face of the same sensitized film at different longitudinally extending portions thereof, to form the sound sequence at one side of and along the picture sequence.

8. The method of producing a talking moving picture record on a single film which comprises photographing simultaneously upon separate films the picture and the sound to form separate negatives, photographing said negative picture record upon a portion of a sensitized film not exposed to a sound record and photographing the negative sound record on the same face of said last film and at a portion thereof not exposed to the picture record.

9. The method of producing a talking moving picture record on a single film which comprises photographing simultaneously upon separate films the picture and the sound to form separate negatives, photographing said negative picture record upon a portion of a sensitized film not exposed to a sound record, and photographing the negative sound record on the same face of said last film and at a portion thereof not exposed to the picture record, said last two photographing steps being performed consecutively."

"11. A process for producing a combined sound and picture positive film, for talking moving pictures, comprising, photographing a sequence of pictures on one length of film, and simultaneously photographing on another length of film a corresponding sequence of

sounds accompanying the action, separately developing the records of said two lengths of film in a manner appropriate for each, and printing such developed sound and picture records respectively upon different longitudinally extending portions of a single sensitized film, to form the sound sequence at one side of and along the picture sequence."

"DISCLAIMER

To the Hon. Commissioner of Patents:

Your petitioner, American Tri-Ergon Corporation, a corporation organized and existing under the laws of the State of New York and having a place of business in the City, County and State of New York, represents that in the matter of certain improvements in Process for Producing Combined Sound and Picture Films, for which Letters Patent of the United States No. 1,825,598 were granted on September 29, 1931 to said American Tri-Ergon Corporation, as assignee by mesne assignments of the inventors, Hans Vogt, Joseph Massolle and Josef Engl, said corporation is the owner of the entire right, title and interest under an assignment dated June 6, 1930 and recorded in the Transfers of Patents of the United States Patent Office, July 3, 1930, Liber T 144, pages 192 to 199, and other assignments referred to in said assignment, and that your petitioner has reason to believe that through inadvertence and without any fraudulent or deceptive intention, the specification and claim of said Letters Patent are too broad, including that of which said inventors were not the first inventors.

Your petitioner therefore hereby enters this disclaimer to that part of the claim which it does not choose to claim or hold by virtue of the patent or said assignments, to wit:

(a) The process as set forth in claim 6, except wherein the picture and sound negatives are separate films at the time of development.

(b) The process as set forth in claim 7, except wherein the sequence of pictures is photographed upon

a film separate from that upon which the sequence of sounds is photographed, and the picture and sound negatives are separately developed, in a manner appropriate for each, and are consecutively printed upon the same sensitized film."

More than nine years elapsed between the date of the filing of the application in question in the United States Patent Office and the date of the granting of the patent in suit, and the claims in suit were introduced by amendment dated July 15, 1931.

During that long period of time the defendant and the Western Electric, its parent company, engaged extensively in the commercial distribution of said Western Electric talking motion picture sound recording and reproducing systems.

At the time of the application in the United States Patent Office for the patent in suit in 1922, it was common and necessary practice in the motion picture industry to compensate, so far as was possible, for over and under exposure of different scenes or takes of motion pictures by under and over development, respectively, of the picture negatives.

This was accomplished by what was known as the rack and tank development, in which each scene was wound on a rack and then submerged in a tank containing the developer, the development being watched by the operator, who from time to time lifted the rack and film from the tank, and exercising his individual judgment, determined the extent to which the development of the particular scene should be carried.

This, of course, resulted in merely a compromise, inasmuch as no amount of manipulation would make it right, if the exposure was not correct in the first place, but would merely change the degree in which it was not correct.

In recording sound photographically the negative sound record, it was realized, would be uniformly, if not correctly or normally, exposed (a uniform source of light

being used) and, therefore, should receive a uniform development throughout.

To continue the practice of compensating in the developing of the pictures for under and over exposure of the pictures, the patentees wished to develop their picture records separately from their sound records.

This the patentees described in their specifications as originally filed in the United States, in 1922, as follows:

> "In the production of speaking films it is of great advantage especially from the point of view of use, to arrange the sound sequence and the picture sequence upon one and the same material separate (film).
>
> "In this procedure, however, there frequently occur in consequence of the changing lighting conditions in the cinematographing process, changes in the degree of light and the bromide of silver layer, and this causes the picture sequence to be either overlighted or underlighted.
>
> "As the same film, however, bears close to the picture sequence the continuously normally lighted sound sequence, these differences cannot be removed in the case of combined negatives, by developing, weakening, strengthening, and so forth. They can only be removed by subjecting the underlighted or the overlighted negative places to separate corresponding treatment.
>
> "Technically, this treatment is practically impossible so long as the two sequences are photographed upon the same film."

Further such original specification says:

> "According to the present invention the difficulty is overcome by either employing entirely separate films for the production of the negatives, or films which are connected during the photographing, but which are separated from one another before the developing."

The difficulty which the patentees were seeking to overcome was under and over exposure of the different

picture scenes, which they proposed to do by developing the negative picture records separately from the negative sound record.

The alleged invention cannot be considered as broadly, for having the picture and sound records on different films, so that they are separately developed, as that was old and there would be no invention.

The paragraph of the specifications last quoted proposes two ways of obtaining the separate negatives, (1) to record sound and picture films on separate films in the first instance, (2) to separate the two records after recording them on the same film. This is shown on the drawings added by amendment.

Fig. 1 shows sound and picture records recorded on separate films of standard width. Fig. 3 shows two negative records recorded on a wide non-standard film, having three rows of sprocket perforations, and which are severed at either p or u before development. Fig. 2 shows a wide non-standard positive print produced by printing the separate or separated negative records preferably consecutively on the same film.

The specification states that the two negatives of Fig. 1 or the separated negatives of Fig. 3 may be united or pasted together prior to the printing and then copied "in the usual manner".

In the separate film process of Fig. 1, there are three or four steps depending on whether the two records are or are not pasted together before printing, namely, (1) exposing, (2) developing, and (3) printing, and if the two records are pasted together before printing, that constitutes the fourth step.

In the divided film process of Fig. 3, which is claimed in claim 2, there are four or five steps, depending on whether the divided or separated negatives are or are not pasted together or reunited before printing; but this process needs no further consideration as it is not in suit.

The claims in suit may be divided into two groups, namely, (1) claims 8 and 9, which are two-step claims for exposing and printing; (2) claims 5, 6, 7 and 11, which are three-step claims, the additional step being the developing, claims 6 and 7 being read with the disclaimer.

The specification further states:

> "The synchronism is assured in both cases by the perforations and by corresponding marks. The production of the positive films can take place by copying the two negative films preferably consecutively upon the same positive films.
>
> "One can, however, also unite previously, the two negative films longitudinally together, and then copy this so united negative in the usual manner."

Nowhere in their said original specification or claims did the patentees state or even suggest that it was at all material that the two negatives be printed on the same side or face of the positive film.

Plaintiff's expert says that he finds it by inference which he gets from the specification, and prior practice on this point.

I cannot agree with him.

The most that the patentees in the specification say is that it is desirable to "arrange" the two records "upon one and the same material carrier (film)"; that "the production of the positive films can take place by copying the two negative films preferably consecutively upon the same positive films"; and, in original claim 1, that the two records are "copied upon single film".

The idea of recording sound on film, of recording pictures on film, or both sound and pictures on the same film, of recording sound and pictures on separate films so as to be able to develop them separately and then project them together, or of printing sound and pictures from separate negatives upon a single film, were separately

and collectively old prior to the conception date of either party, neither of which goes back of 1921.

See Greensfelder patent No. 1,254,684, which disclosed everything but simultaneously recording; De Forest patent No. 1,446,246.

It is true that Greensfelder recorded his sound record after he took his pictures, instead of doing it at the same time.

There was, however, no novelty in simultaneous recording, as this was old. For example, see Bullis patent No. 1,335,651, and Craig patent No. 1,260,337.

The plaintiff urges that defendant cannot with good grace contest patentability, in view of the application of Wente, a research engineer of the Western Electric Company, to which he assigned such application; but this contention was not sustained. Wente did make broad claims as is customary, but those broad claims were cancelled on the first amendment, and as I believe on Greensfelder rather than on the Vogt British patent. In any event, claims similar to some of the Wente claims so cancelled were made by Craig, in 1913 and cancelled as unpatentable at that time.

The claims of the patent granted to Wente are limited, and I do not see how his application prejudices the defense in this action.

The plaintiff's expert stated on cross-examination that what he thought was new in the patent in suit, and not found in the prior art, was printing both the separately exposed, separately developed negatives side by side, on the same side of the positive film.

On re-direct examination he stated that in addition to what he had previously stated was new over the prior art, was the process of simultaneously recording the sound and picture record, and in printing them side by side on different longitudinally extended portions of the same positive film, without regard to whether they are separately developed or not.

The original specifications were amended to state that the separate development step might be eliminated.

This amendment invalidated the two-step claims, as a separate development to overcome under and over exposure of the different picture scenes was the most important part of the disclosure, and by its elimination the invention claimed therein was different and broader than the one disclosed by the patentees in their application as filed.

It was old and well known in the art to have both the picture sequence and sound sequence printed side by side on a positive film, and also to put the sound record beside the picture record on a single film.

Walker patent No. 1,168,717 discloses that the picture negative and sound negative were put on different longitudinally extending portions of the positive film at different times.

Craig patent No. 1,260,337 discloses in the negative process recording of sound negatives and picture negatives on separate films, and the two negative films developed separately and printed on opposite sides of one film.

The patentees filed their first application for the alleged invention in Germany, on April 15, 1921, and thereafter within the convention period they filed their application in the United States on March 29, 1922, and their British application on April 11, 1922, all three being substantially identical including their claims. The original claim 1 was for the two-step process of developing and printing, specifying that the two records are developed separately, but not whether made on one or two films, and then printed on a single film. Claim 2 was limited to these two steps by reference back to claim 1, and added the third step of exposing or photographing the two records on separate films. Claim 3 was limited to the two steps of claim 1 and added two additional steps, namely, the photographing on a single film, and the subsequent di-

viding of that film for separate development. Claim 4 refers back to the several steps of each of the three preceding claims, and adds to the several steps of each, the step of reuniting the two negatives before printing.

The application of the patentees in each of the three countries was therefore for a patent for their separate film process.

Defendant offered in evidence the file-wrappers and contents of the German Patent Office, and the British Patent Office, but I can find no authority for their reception other than to show what was the application originally filed, and the patent that was granted.

The German patent issued to the patentees was published on February 2, 1923.

There was offered in evidence the German patent No. 279,598, of 1914, to Reimer, which specifically claimed:

> "Process for the making of a film which consists of an image band and a sound band having the distinctive feature that each band is made as an individual band separately and that both bands are thereupon combined with each other."

This appears to exhaust any novelty as a process in the patentees' separate film process.

Defendant also offered in evidence the British specification offered to public inspection by the British Patent Office on April 15, 1922, four days after it was filed. This was admissible to show the application that was filed.

Defendant also offered in evidence British patent No. 178,442, as printed and placed on sale at the British Patent Office on December 7, 1922.

Between April 15, 1922, the time of filing, and December 7, 1922, when the application was printed and placed on sale, the fourth paragraph of the specification was changed by substituting the following:

> "The process for the production of combined sound picture films hereinafter set forth differs from previous attempts in this direction, chiefly in the per-

fect synchronization of the sound and picture sequences, whilst permitting of the separate development of the respective negatives necessitated by unavoidable variations in the lighting of the films during the initial exposure.

"Attempts have been made to attain the end in view by taking the two negatives separately and independently and subsequently combining the records for reproduction; but it is found impossible to secure full synchronization in this manner.

"It has also been proposed to pass two separate films for the picture and sound records respectively, the film being driven positively and simultaneously by passing over the same sprocket wheel through a talking apparatus and to provide means for producing a series of corresponding identification marks upon the films by aid of which the two films after separate development can be reassembled; but this process also lacks the requisite accuracy of register.

"According to the present invention, the difficulty is overcome by employing films for the production of the negatives which are integral during the photographing, but which are separated from one another before developing.

"After development, these two negative films are reunited and are copied upon the same positive film. In this way, the absolute coincidence of the sound and the picture record respectively is assured, whilst the needful difference in treatment can be given during the development."

The patent was published with only one claim, as follows:

"Improved process for the production of combined sound and picture records, in which the sound record and the picture record are produced simultaneously on a single film which is then divided and the two parts developed separately, and afterwards reunited and used to print the single positive record."

This brings us to the United States application.

On April 14, 1922, the day before the British application was opened to the public, the United States Patent

Office Examiner acted on the application, and cited the Bullis patent No. 1,335,651.

On November 25, 1922, shortly before the revamped British patent was published, the patentees cancelled all the original claims of the United States application, and inserted a single claim which was identical with the single claim of the British patent, *supra*.

This action, it seems to me, must have been taken in view of the Bullis patent.

No drawing was filed with the original application, but by amendment a drawing was filed on November 25, 1922.

The defendant frequently referred to counsel's arguments and statements during the progress of the patent through the Patent Office, but these are not admissable to show estoppel, and therefore I have not considered them.

The new claims were specifically limited to the divided film process.

The actions of the patentees on their applications in Great Britain and the United States seem to me to be susceptible of only one interpretation, and that is, that they are intended to and did abandon the alleged invention covered by the claims in suit.

On April 19, 1923, after the British Patent was issued, the Examiner in the United States Patent Office rejected the single claim, stating:

> "The claim is rejected as not involving invention over Bullis of record. It does not involve invention to make the record on a single film instead of on two films rigidly attached together, especially in view of the fact that the single film is afterwards cut apart as the parts of the united film are taken apart."

The patentees by amendment acquiesced in the rejection and cancelled their single process claim without reservation of any kind, and inserted in the amendment two product claims, requiring in each claim one homogeneous film band, on which the sound records and picture records are copied, the first claim being for a com-

posite print produced from separate films, and the second claim for a composite print produced from a cut or divided single film.

The Examiner, on October 15, 1923, rejected claim 1 upon the prior Craig patent, No. 1,260,337, which he held "shows a film on which two separate negatives are copied". He further said, "Claims 1 and 2 are rejected as defining an article by the process of making it. In order that claims of this character may be allowed, it is necessary that the article have physical characteristics which an article made in the old way would not have. This is not true in this case."

The Examiner further said:

> "Claim 1 is required to be canceled. In response to the requirement for division contained in the Office Action of April 14, 1922, applicant elected the form in which the records were made on a single film and then cut apart. He can not now claim the species in which they are now made on 2 separate films."

No further action was taken for nearly a year.

In the interim plaintiff's present counsel were retained to prosecute the application which they continued during the remaining seven years.

They interviewed the Examiner and on September 29, 1924 filed an amendment containing two process claims the obvious purpose of which, it seems to me, was to recapture the process which had been abandoned.

On January 26, 1925 the Examiner rejected both claims, citing Greensfelder patent No. 1,254,684, and also the abandoned British specification No. 157,751, filed by the patentees of the patent in suit, and corresponding to French patent No. 532,750.

The applicants on April 2, 1925, by amendment added as claims 3 and 4, claims 1 and 3 of patent No. 1,489,314, to DeForest, which had issued a year before, and requested an interference.

On April 6, 1925, the Examiner again rejected the claims on their merits, and said:

> "Claims 1 and 2 are rejected on Craig, 1,260,337 in view of Greensfelder, 1,254,684, both of record. It is shown to be old in Craig to take separate synchronous sound and picture records simultaneously, and to then reproduce these two records on a single record strip. Applicant desires to reprint both records on one side only, but this is the teaching of Greensfelder, note page 3, line 128, to page 4, line 8."

The Examiner was the same Examiner who had granted the DeForest patent, and he further said:

> "Claims 3 and 4 are rejected as not based on the disclosure of applicant. Applicant takes a sound record and a picture record and reproduces these two records on a third film. These claims, however, call for a sound record and a picture record as does applicant, but the claims then define that the sound record is reproduced on the original picture record strip which is not the method of applicant. If however, it requires that a positive of the sound record be made and a reprint of this be taken on the original picture strip, still it would not be the method outlined by applicant in his specification. The steps are clearly not the same. Referring to the case of the patentee, the reference Craig cited in this action was held not to be a reference against the claims here under consideration, and though the steps in the method of applicant and of Craig are the same, yet the claims of patentee were held patentable over Craig. Therefore, it is evident that applicant cannot make the claims of the patentee as applicant does not disclose such a method in his application."

On April 23, 1925 the patentees filed another amendment.

On April 27, 1925 the Examiner allowed the divided claim, but finally rejected claim 1 and claims 3 and 4 of the two DeForest claims.

From this action an appeal was taken to the Examiners in Chief.

Under the rule of the Patent Office no question of patentability or invention could be considered in connection with the DeForest claims, because those claims were taken from an issued patent and the Examiners did not find a clear anticipation.

Having decided that the patentees could make the DeForest claims, the Examiners under the rule rendered a perfunctory decision as to the patentability of the other appealed claim which was more limited by specifying the separate development step, and said:

> "The Examiner allowed these claims, which is evidence of their patentability, notwithstanding that the Greensfelder patent was prior art, and which shows the printing of the two positives side by side, Fig. 5, as does also the Craig patent as above set forth. Greensfelder does not photograph his negative simultaneously. While the disclosure in these patents may tend toward a possibility of doubt as to invention being involved in the process defined by claim 1, the grant of the patent to DeForest and the lack of clear anticipation in either of the references or in their combination as to the addition or substitution of features in one not shown in the other and involving the question of invention vs. mechanical skill, we are of the opinion that claim 1 should be allowed in the absence of more pertinent and anticipatory art and appellants allowed to be placed in interference with DeForest to determine the question of priority."

The interference was decided on the merits in favor of the patentees by the Examiner of Interferences and also by the Board of Appeals, and an appeal was then taken to the Court of Customs and Patent Appeals, in which last named court, on the argument, counsel for DeForest in effect conceded priority to the patentees, and the decision of the Board of Appeals was affirmed.

I have not considered the arguments or briefs on the interference, as I am not satisfied that they are admissible.

The interference with the DeForest claims should not have been allowed. Those claims were for a different process than that disclosed by the patentees. This appears to me to have been conceded by plaintiff's counsel in his opening statement on this trial.

Those claims could never have dominated the patent in suit, for if so broadly construed they would not have been sustained over the Craig patent, No. 1,260,337, as the claims themselves read on the Craig patent, if the limitation to the additional rephotographing step is not given its intended meaning.

What DeForest taught and the meaning of the claims clearly appears from the specification of his patent, and that was, instead of printing his sound and picture records directly onto a positive film, as in the patent in suit, DeForest introduced the separate and distinct additional step, namely, a photographing or rephotographing of the sound record onto the original picture negative to obtain "a more exact and faithful photograph containing any details of the finest light variations produced by sound waves." DeForest preferred to make the original sound record larger in size than could be accommodated with the pictures on the positive film, and to reduce its size by the additional photographing step.

Except for the interference which was sought on behalf of the patentees and was not forced on them by DeForest, I am convinced that the patent in suit would not have been granted with the claims in suit, and it is worthy of note that the only claims in suit which state that the two records are printed on the same side or face of the film, a point on which plaintiff lays great stress, are claims 7, 8 and 9.

By the amendment of July 15, 1931, the alleged invention of the patent in suit was broadened to eliminate the separate development step, the most important part of the original disclosure, and to disclose the different two-step process of exposing and printing.

Claims 8 and 9 as I have hereinbefore pointed out are invalid, as they are for a different alleged invention than the original. Motion Picture Patents Co. *v.* Independent M. P. Co., 200 Fed. 411.

The only other two step claims in suit, 6 and 7, were by the Disclaimer limited to the third step of separate development.

Further, the two-step claims in suit and the broadening amendments were not inserted until July 15, 1931, and that was long after the process had gone into public use, and such an attempt should be regarded by the courts with disfavor. Railway Co. *v.* Sayles, 97 U. S. 554, 563.

Plaintiff contends that it made a two-step claim as early as July, 1925, which was when it found the DeForest patent, but even then it was new matter and was not accompanied by the broadening amendments to the specification inserted July 15, 1931.

The alleged invention of the claims in suit is a process and not an article or product.

A process consists of certain steps or operations in which the invention, if any, must reside. Cochrane *v.* Deener, 94 U. S. 780; Walker, 6th Edition, Sec. 19.

The patent in suit is entitled "Process for Producing Combined Sound and Picture Films". It is merely an example of composite or combination printing, a term applied to the making on a single piece of photographic sensitive material prints or impressions from two or more separate negatives, which is very old.

No photographic operation is involved which was not employed in the old art of composite printing which involved both simultaneous and consecutive exposure of separate negatives, separate development of those negatives in an appropriate manner and with different lengths of development, and both simultaneous and consecutive printing of the separate negatives on a single positive film: and was used in both black and white and color photography, and in both still and motion pictures, long before any date important here.

The patentees made no contribution to the art of photography.

Before 1900, sound was recorded photographically.

Photographic recording of sound with motion pictures and producing a combined sound and picture film, the same as the film in use today, is described in Haines British patent No. 18,057, of 1906.

The composite printing process of the patent in suit for sound pictures was adopted as the need arose and was used by Craig as early as 1913.

The Craig patent No. 1,260,337 discloses simultaneous recording of sound and pictures on separate films, which are developed separately and printed consecutively on the same positive film, and also shows in Fig. 8 a plurality of sound records printed side by side on the same side of his positive film.

I disagree with plaintiff and agree with defendant's expert Jones, that the Craig patent was operative.

The Craig patent as I view it, although this is now disputed by plaintiff, anticipates any invention in the process defined in the claims in suit. It is true that Craig printed his sound record on the opposite rather than on the same side of the single positive film, but printing sound and picture records on the same side of the film was well known in the art at that time, and Craig's specification shows that he contemplated printing the sound record on the same side of the film as the pictures, as he says therein:

> "It will be noted from what has gone before that so far the negative of the sound record and the negative of the picture record have been made upon separate strips or films. It is necessary, therefore, that these two negatives should be photographically printed upon one film or upon opposite sides thereof."

Even if the patent was silent on that point, the patentees cannot base their monopoly upon the printing of the sound and picture negatives on the same side of the

film, which was old and well known and was not even mentioned in the patentees' original specification.

What the patentees were concerned with was the separate development then required for different portions of the picture negative.

The Greensfelder patent No. 1,254,684 disclosed as I understand it, although this is now denied by the plaintiff, everything in the claims in suit but simultaneous recording.

It cannot be distinguished on the ground that it teaches nothing regarding the recording of acoustic vibrations. It discloses photographing of the sound in the sense of photographically producing a sound record, and a picture record, each on separate films, and then printing both on different portions of the same film.

Simultaneous recording of pictures and sounds was obvious and universal practice, and was disclosed in the Craig patent No. 1,260,337.

Separate development was old and well known in the art, and Craig and Greensfelder separately recorded records would of necessity be separately developed.

Again I disagree with the plaintiff, as it seems to me that the Bullis patent No. 1,335,651 disclosed everything in the claims in suit but printing the simultaneous and separately developed negatives on a single homogeneous film. His apparent preference was for producing his single positive film, by first printing from his negatives, and then joining them together.

This, however, does not seem to me to be sufficient to relieve the claims in suit from anticipation, as it was old in the art to print on the same film simultaneously and separately developed negatives.

No reason has been shown nor have I found any why it is impossible for the Bullis patent and the Craig patent No. 1,260,337 to be combined together to anticipate the claims in suit; therefore I disagree with plaintiff's contention that they cannot be so combined together.

The Bullis construction is not impractical.

The Bullis patent was cited by the Examiner early in the prosecution of the patent in suit and, as it seems to me, resulted in the cancellation of the original claims.

From that time on, however, it was undoubtedly lost sight of, and was not called to the attention of the Examiners in Chief, and while as plaintiff contends it may have been in the file, yet no reference was made to it by them, and as I consider it a most pertinent reference, it seems to me that the failure to cite it against the claims as finally allowed deprives the patent in suit of the presumption of validity over the prior art.

Walker patent No. 1,186,717, which is for a combined camera and recorded, was not cited in the Patent Office in the prosecution of the patent in suit, but was a pertinent reference. It discloses the consecutive printing of sound and pictures on the same side of a single positive film of standard width, and I agree with the expert Jones, there "is no functional difference between printing consecutively the picture record and the sound record on the single positive film, as disclosed in this Walker patent, and printing consecutively the separate sound and picture records on a single positive film as disclosed in the patent in suit."

Walker's film is of standard width; the patentees' film is non-standard.

Walker's film, I believe, could be produced by using the separate negatives of Craig and Bullis, in Walker's printer.

It was everyday practice in the motion picture industry, as early as 1908, to print on standard positive film composite pictures from separately developed negatives.

See testimony of Nonnenbacher, and Messter patent No. 1,286,383; British patent to Rossi, No. 21,467 A. D. 1902; and British patent to Downing, No. 6,727 A. D. 1913.

Each of these patentees made their records on separate films, developed them separately, and printed a plurality

of records on the same side of the positive of a moving picture film. The process of the patent in suit is not changed from the process of those patents, as it matters not whether the records printed on the same side of the film be sound and pictures, or a plurality of pictures, as the process steps are identical. Brown *v.* Piper, 91 U. S. 37; Penn. Railroad *v.* Locomotive Truck Co., 110 U. S. 490; Dreyfus *v.* Searle, 124 U. S. 60.

It seems clear to me that in combining the old elements of the claims in suit there was no invention by the patentees, but merely a judicious selection from the prior art. Newcomb *v.* McMahon, 59 Fed. (2d) 899.

It is not necessary that all of the elements of an alleged invention be found in one patent. Zimmerman *v.* Advance Machinery Co., 232 Fed. 866, 869, 870; Dilg *v.* George Borgfeldt & Co., 189 Fed. 588, 590; Keene *v.* New Idea Spreader Co., 231 Fed. 701, 708; Linville *v.* Milberger, 34 Fed. (2d) 386, 388; Reflectolyte Co. *v.* Luminous Co., 20 Fed. (2d) 607, 611.

The question is not whether the claims in suit are anticipated by any one patent, but whether there is any invention over the prior art, and I am unable to find any such invention.

The three following described patents relate to sound pictures *per se*.

British patent to Pederson, No. 115,942 A. D. 1918, discloses the recording simultaneously of sound and pictures photographically on a single film. After suitable treatment, the sound negative is separately impressed on the single positive film by embossing, which is a printing operation but not photographic printing, on which the pictures are printed from the original negative.

Kinderman British patent No. 18,163, of 1913, discloses the attaching to the picture negative of a separate wax-coated strip on which he recorded his sound, simultaneously with his pictures, by means of a stylus.

Reimer German patent No. 279,598, of 1914, discloses the recording of sound and pictures simultaneously on

separate bands, the picture negative being separately developed, and the sound record separately treated by the well known galvanic process. A copy of the sound record is then made and attached to the separately printed picture positive, forming a single combined sound and picture film.

As to the disclaimer filed herein, after plaintiff had been furnished with a statement showing that both of defendant's films receive the same character of development, it seems to me to be for a purpose that the statute was never designed to permit. Fruehauf Co. *v.*, Highway Co., 54 Fed. (2d) 691.

Even with the Disclaimer, claims 6 and 7 show no invention over the prior art.

The claims in suit show no invention over the prior art.

Plaintiff recites at length what it contends are the advantages of the alleged invention, but it seems to me that it does not point to any advantage which does not apply to the prior art which I have considered, and some of the advantages recited by plaintiff are not mentioned in the patent in suit.

The cases cited by plaintiff to show validity do not seem to me to be in point.

No commercial success is shown by the plaintiff, and the patentees made no real contribution to the art. The success of the defendant, its licensor and its licensees is due to the many inventions of the Western Electric Company, without which success would have been impossible.

The claims in suit of the patent in suit are invalid by reason of anticipation and lack of invention over the prior art.

The patent in suit is further attacked as invalid under Section 4887 of the Revised Statutes, Title 35, Sec. 32 U. S. Code, so much of which as is necessary for consideration herein providing as follows:

> "No person otherwise entitled thereto shall be debarred from receiving a patent for his invention

> or discovery, nor shall any patent be declared invalid by reason of its having been first patented or caused to be patented by the inventor or his legal representatives or assigns in a foreign country, unless the application for said foreign patent was filed more than twelve months, in cases within the provisions of section forty-eight hundred and eighty-six of the Revised Statutes, and four months in cases of designs, prior to the filing of the application in this country, in which case no patent shall be granted in this country."

Patentees' French patent No. 532,750 was granted November 21, 1921, on an application filed March 25, 1921. This application was filed more than one year before March 29, 1922, the filing date in this country of the patent in suit. The French patent was granted long before the patent in suit.

The prosecution of the application filed in this country April 4, 1921 was abandoned by the applicant.

It seems clear to me, although it is sharply contested by plaintiff, that the French patent is for the same alleged invention as the patent in suit, as it discloses simultaneous recording of sound and picture records on separate films, which by reason of being separate are necessarily separately developed, and printing of the separate negatives on the same positive film.

While it is true that what is known as "scoring", in which the sound is recorded after the pictures are taken and while they are being projected, is also disclosed in the French patent, that does not change my opinion hereinbefore stated, that the patent in suit is for the same alleged invention, and that is the question to be determined. General Electric Co. *v.* Alexander, 280 Fed. 852, 854.

Plaintiff's contention that this defendant failed to prove what invention was patented under the laws of France, in the said French patent, is not sustained.

The French patent is in evidence and speaks for itself, and both describes and claims the alleged invention of the patent in suit.

The courts in dealing with this statute have always looked to the claims of the foreign patents and read them in the light of the disclosure and decided what is patented, the same as they do with the domestic patents. Merrell-Soule Co. *v.* Powdered Milk Co., 222 Fed. 911, 913; Sirocco Co. *v.* Sturtevant Co., 220 Fed. 137, 143; Commercial Acetylene Co. *v.* Searchlight Gas Co., 188 Fed. 85; Siemens *v.* Sellers, 123 U. S. 276, 282; Leeds & Catlin *v.* Victor Co., 213 U. S. 301, 321; Fireball Gas Co. *v.* Commercial Acetylene Co., 239 U. S. 156, 165.

See also Western Electric Co. *v.* Citizens' Tel. Co., 106 Fed. 215, at page 217, where it is expressly stated that the laws of the foreign countries were not proved, but the court held that the foreign patent, an Italian patent having no formal claims, was for the same invention.

The French patent undoubtedly claims the process of claims 6, 8 and 9 of the patent in suit, and I can find no support for plaintiff's contention that the French claims do not touch upon separate development which is specified in claims 5, 7 (by Disclaimer) and 11 in suit.

Separately recorded records are described and expressly claimed in the French patent, and the evidence clearly shows that separately recorded records are necessarily separately developed.

Plaintiff's attempt to distinguish between claims 7 and 9 of the patent in suit and the French claims, on the alleged grounds that the latter do not touch upon the matter of consecutive printing, and that the French claims do not state that the films are separate at the time of development (as stated in Disclaimer, Amendment 6) utterly fails.

Neither is a matter of substance nor constitutes the essence of the alleged invention.

That the films are separate at the time of development is obvious, and claim 5 of the French patent clearly states that the two records are copied on the same film, and it is of no moment whether both records are printed at once, or one after the other.

What is required to constitute identity of a patent within the purview of Section 4887 is substantial not formal identity of invention, as covered by the claims. United Shoe Machinery Co. *v.* Duplessis Co., 148 Fed. 31, 34, 35.

The abandonment of the application based on the French patent, which was for the same alleged invention as that of the patent in suit, made it impossible for the patentees to obtain a United States patent on an application, filed more than one year after the French application, for the alleged invention of the patent. Robert Esnault-Pelterie *v.* Chance Vought Corporation, C. C. A., Second Circuit, July 17, 1933.

The patent in suit is invalid under Section 4887 R. S., Title 35, Sec. 32, U. S. Code, unless plaintiff can maintain its contention that the application for the patent in suit is a continuing application, and entitled to the dates of the abandoned application.

In order to accord to the patent in suit the date of the abandoned application, intent to continue the earlier abandoned application by means of the application for the patent in suit must be shown.

On the face of the application for the patent in suit, it was entirely independent of and hostile to the abandoned application, and nowhere in the prosecution of the application for the patent in suit is there any suggestion of the intent to continue.

Further, it seems to me that in the prosecution of the application for the patent in suit, the intent to continue was not merely absent, but that the evidence shows an intent not to continue.

As late as April, 1931, in the brief filed on behalf of the patentees in the interference with DeForest, it was

stated that the earliest date to which they could carry back the date of application for the patent in suit was "limited to April 14, 1921", the date of the German application corresponding to the patent in suit.

The preliminary statement of patentees in said interference states:

> "The invention was introduced into the United States by the application papers, viz., the present application Ser. No. 547,860, which papers were received in the United States on or about the 24th day of March, 1922."

It contains no reference to the application for the French patent on which plaintiff now seeks to rely, or to any other foreign application corresponding to the abandoned United States application.

The oath to the application for the patent in suit contains no reference to the application for the said French patent or other corresponding foreign application, as required by the rules of the Patent Office.

On January 26, 1925 the Examiner rejected the patentees' claims on the patentees' own British application, No. 157,751, corresponding to the abandoned United States application and the said French patent.

No attempt was made by the patentees to carry back their date to that of the abandoned application, but they contended that the British complete specification was not accepted and the application had become void, and that although a publication, it was not available as a reference, as it was not a printed publication more than two years prior to the then pending application.

No mention was made of the French application which had enured into a patent some years before.

It seems clearly established that the patentees did not intend to continue the abandoned application but to prosecute the application for the patent in suit as an independent and hostile application. American Casting Mach. Co. *v.* Pittsburgh Coal Washer Co., 237 Fed. 590.

That the Scott's abandoned application described in the case last cited was a joint application does not change the situation, as a joint application could while pending have been amended to make it a sole application or a new joint application filed while preserving the benefit of the date of the original application. Union Switch & Signal Co. *v.* Kodel, 55 Fed. (2d) 173; *In re* Roberts, 263 Fed. 646; Bijur *v.* Kennington, 278 Fed. 313; and Briggs v. Kaisling, 288 Fed. 254.

The following cases cited by plaintiff are not in point, as in each case a clear intention to continue was expressed while the application was pending. Smith *v.* Goodyear Co., 93 U. S. 486; Corrington *v.* Westinghouse, 178 Fed. 711; Novadel Corp. *v.* J. P. Meyer & Co., 35 Fed. (2d) 697.

Plaintiff is debarred from claiming, as it did for the first time on the final hearing of this suit, that the application for the patent in suit is a continuing application, and entitled to the date of its abandoned application.

The patent is invalid.

A decree may be entered in favor of the defendant against the plaintiff dismissing the bill of complaint on the merits, with costs.

Settle decree on notice.

Submit proposed findings of fact and conclusions of law in accordance with this opinion for the assistance of the court, as provided by Rule 70 ½ of the Equity Rules and Rule 11 of the Equity Rules of this court.

U. S. D. J.

The Opinion of the Court of Appeals, Reported in 71 F. (2d) 153.

UNITED STATES CIRCUIT COURT OF APPEALS

FOR THE SECOND CIRCUIT.

AMERICAN TRI-ERGON CORPORATION,
Plaintiff-Appellant,

AGAINST

PARAMOUNT PUBLIX CORPORATION,
Defendant-Appellee.

Before:

MANTON, SWAN and CHASE,
Circuit Judges.

Appeal from the District Court for the Eastern District of New York. Suit for infringement of patent; decree for defendant; plaintiff appeals. Reversed.

WARD, CROSBY & NEAL, Esqs.,
Solicitors for Appellant.

THEODORE S. KENYON, Esq.
S. MORTIMER WARD, JR., Esq.
PAGE S. HASELTON, Esq.
of Counsel.

CHARLES NEAVE, Esq.
HENRY R. ASHTON, Esq.
WILLIAM J. BARNES, Esq.
F. T. WOODWARD, Esq.
E. J. DRISCOLL, Esq.
Counsel for Appellee.

MANTON, *Circuit Judge.*

This suit is for infringement of patent No. 1,825,598, a process for producing combined sound and picture films.

It is called sound on film. The application for the patent was filed March 29, 1922, and granted September 29, 1931, after a long interference proceeding with DeForest patent No. 1,489,314 which was finally decided by the Court of Customs and Patent Appeals in appellant's favor. Prompt prosecution for this infringement followed.

Appellee is a producer of talking motion pictures and practices this process of producing sound on film motion pictures as taught by the patent in suit. The Western Electric Co., and its wholly owned subsidiary, Electric Research Products Inc., licensed its licensees, including the appellee, to use the process as the "Western Electric Sound System".

A German application for the same process was filed April 14, 1921.

The problem sought to be solved by the patent was bringing together on one positive film the picture record, which requires one type of development, and a sound record which requires a different type of development. Its accomplishment marked an important advance in the art. Makers of talking motion pictures, including the Western Electric Co. and its associates, during the period following the application for this patent tried, but until the inventors exhibited this process, accomplished little with the development of sound on film. While all apparatus necessary to practice the present invention was at hand and owned by the Western Electric Co. and its affiliates, no one solved the film problem presented by the requirement of different treatment for sound and picture records. The difference in treatment was necessary to avoid distortions of one or the other or both in reproduction. The engineers of the Western Electric Co., in this period, struggling for the solution of the problem of sound on film development, turned to sound on disc. The first successful talking motion picture in this country was produced by sound on disc. The process of the patent in suit was brought to this country

from Germany. Western Electric Co.'s engineers examined and tested it. They thereupon used it and it superseded sound on disc. Its adoption has become universal and speaks for the merit of the inventive thought therein involved. No sound on film was made as this record discloses until the appellant's process appeared. Prior patents proposed using sound on film in connection with motion pictures. One was the single film system which involved recording sound and pictures simultaneously on the same negative film, developing that film as a unit, and then printing the sound and picture records from the single negative film onto a single positive film. This involved no separate development of the sound and picture sequences on a negative film, and was unacceptable for talking pictures of good quality. Pictures require one type of development while sound requires another. No single developing treatment is appropriate to both. Simultaneous development in a single developer produces poor pictures or poor sound or both. The resulting inferior product has relegated the system to uses where sound is not of importance. The other system, the double film system, records sound and pictures simultaneously on separate films. Here the picture negative is developed and printed on one positive film and the sound negative is separately developed and separately printed on another positive film. This system in practice requires two separate projectors, one for the picture positive and the other for the sound positive. This necessitates the use and synchronization of a double set of projectors, which makes it impossible to commercialize the double film system. Prior patents suggested employing a double film system and endeavored to bind the two separate films on a single projector. But this was cumbersome and impracticable. The double film system did not permit the use of a single or unitary positive print and failed to solve the problem.

By the invention in suit, a product of a single positive film bearing the sound and picture records side by side

is produced. The new process permits both the sound record and the picture record on the positive film to be as perfect as the arts of photography and telephony can make them and neither is compromised in quality by reason of the presence of the other, as was the case in single film systems. The result is accomplished by recording the sound and pictures on separate films; then separately developing the sound and picture films in separate developer solutions under development conditions appropriate to the requirements of each. A single positive print is made from these two separately developed negatives, by printing the sound and picture sequences side by side on the same face of the positive film. While it might be said that superficially the positives so produced are similar to the positives produced by the single film system, still the function and effect is different and in the practical art that difference has been demonstrated. Combining steps of the double film system and steps of the single film system, the inventors have made a combination, and a process for achieving a new result which has been effective and enduring and has become the standard practice in the industry.

The practical importance and achievement of the invention lies in its product—a one piece positive film having side by side in fixed synchronism on one face picture sequences and sound sequences, each having been recorded simultaneously on separate negatives and developed separately according to its own requirements.

The claims sued upon are 5, 6, 7, 8, 9 and 11. Claims 6 and 7 are to be read with the disclaimer filed. Claim 5 is typical and reads:

> "5. A process for producing a combined sound and picture positive film, for talking moving pictures, comprising, photographing a sequence of pictures on one length of film, and simultaneously photographing on another length of film a corresponding sequence of sounds accompanying the action, separately developing the two negatives in a manner appropriate for

> each, and printing the sound and picture negatives respectively upon different longitudinally extending portions of the same sensitized film, to form the sound sequence at one side of and along the picture sequence."

The commercial use of the patented process is fullsome testimony of its inventive worth. The result of testing it by the inquiry, as it should be, of what has been the commercial success of the invention rather than the appellant's commercial success, adds greatly to its validity.

In addition to the German patent for the same process, a British application for the same process was filed April 11, 1922. It was identical with the United States and German application. The British application resulted in a patent as did the German. The Western Electric Co. scientist, Dr. Wente, applied for a patent disclosing and claiming the invention of the patent in suit. The application stated that for correct sound reproduction

> "it is important that the development of the positive and negative be so carried out that the transmission of the positive is at every point proportional to the exposure of the negative. This is in general not the best condition for the pictures as under these circumstances they will usually be too harsh. In the system here proposed the picture negative and positive can be developed to give the most pleasing results for pictures, and yet the negative of the sound record can be so developed that when it is printed on the picture positive film the required contrast is obtained in the positive sound record."

His claim No. 31 was rejected on the patent of these inventors' (British Patent No. 178,442) corresponding to the patent in suit and was cancelled. And after that experience, it is now argued, by the Western Electric Co. which is defending this suit, that there is no validity. That Company is hardly in a position to question validity of the patent. DuBois *v.* Kirk, 158 U. S. 58; General

Knit Fabric Co. *v.* Steber Machine Co., 194 Fed. 99 (C. C. A. 2); Sugar Apparatus *v.* Yaryan, 43 Fed. 140, 144.

The patents of the prior art to which reference is made, are fairly stated to be but paper patents and they do not anticipate. Composite printing of photographs is illustrated in the Bandman patent No. 125,522 and Jenkins patent No. 606,993. An apparatus for printing motion picture films with pictures arranged alternately in two adjacent series are shown in Dyer No. 970,614. The Haines British patent of 1906, No. 18,057, is an example of single film system. It is clear, however, from the description, that both the picture series and the sound track were to be recorded on the same negative film. The Rossi British patent of 1909, No. 21,467, had the idea of saving expense in positive prints by printing the picture series from one picture negative on one half of the positive and another picture series of another picture negative on the other half of the positive print along side the first series. The inventor made no suggestion of the combination of the two systems, nor does he disclose any process whereby the single positive film may be produced with sound and picture sequences after separate development of each appropriate to their respective requirements. Craig No. 1,260,337; Bullis No. 1,335,651 and Greensfelder No. 1,254,684 were before the patent office and there held not to be anticipations. Craig did not show or describe anywhere a sound and picture record on a single film where the sound and picture records did not overlie each other. In the process he was attempting to operate, he wanted to print on opposite sides. The experts agree that this is wholly inoperative. His patent was owned by a well known corporation—the Eastman Kodak Co.—with resources for investigation and practical uses, but apparently it was found of little value. Greensfelder proposed carrying out his purpose by providing a space for different sound marks adjacent to each film of the picture

sequence. The location of the sound mark in the space controlled the noise to be produced. Each location was to be connected by a separate selenium cell and train of mechanism, with the noise machine corresponding to that location. Thus, if a sound mark were recorded on the extreme left of the space it might effect the beat of a drum; if it were in a different location it might blow a whistle. The invention in suit has a photographic picture of sound waves on the sound track. Greensfelder had only an arbitrary arrangement of sound marks each identical with the other and differing only in its location in the space reserved for the sound marks. Greensfelder takes his picture negative, develops and prints it first before trying to make sound marks at all. The latter are to be on a separate film after the picture positive has been completed and reproduced as a silent movie. In no event does the development of Greensfelder's sound mark negative present any problem like that in the independent development of the sound and picture negatives. Greensfelder does not provide for separate development of picture and sound negatives. He has no sound negatives, and as a practical matter the patent is addressed to a method to escape from problems of photographic recording of the natural sounds accompanying the action. It does not deal with the "talkies" problem. The Walker patent No. 1,186,717 was limited to an old single film system; the sound and pictures were to be taken simultaneously on a single negative developed together and printed together. There is no disclosure of the separate development of the sound and picture negatives in the manner appropriate for each, and their subsequent printing on the same positive film. All the disadvantages that are inherent in the single film system with its identical development of both the sound and picture sequences, are present in Walker's disclosure, and he makes no suggestion which would aid in avoiding them. Other patents of the prior art are far afield from any anticipation of the patent in suit.

A defense of abandonment is interposed under Revised Statutes §4920. It must be affirmatively pleaded in the answer, and this was not done. The claim of abandonment imposes a heavy burden upon one asserting it.

On April 14, 1922, the examiner rejected the claims citing Bullis patent No. 1,335,651. On November 25, 1922, the applicants cancelled their original claims from the United States application and inserted a single claim addressed to the divisible negative film feature which was the subject matter of original claim 3. On December 7, 1922 the corresponding British patent issued with but a single claim identical with the divisible film claim then standing in the United States application. On September 29, 1924 before any use of the invention in this country, claims corresponding in scope to claims 5, 6, 7 and 11 were asserted in the United States application. After March 31, 1925, claims corresponding in scope to claims 8 and 9 in suit were asserted in the application. There were no intervening rights of any sort established by the appellee or by the public in the interval between November 25, 1922 and March 31, 1925, nor was there any unreasonable delay on the part of the applicants in reasserting their invention in the broad scope justified by the original disclosure. Throughout the entire period, the applicants were asserting the invention in its broad scope in their German application and patent. That application was never restricted to the divided film system but was maintained in language broad enough to cover either the separate film system of the claims in suit or the divided film system illustrated in the United States patent. If the applicants to any degree acquiesced in the limitations in the British patent, the evidence is ample of their insistence on the invention in its broad scope in the German application. It is a common practice to vary the scope of the claims during the course of a patent application. To temporarily cancel the broad claims and later reassert them is permissible. In the

absences of intervening rights such claims are entirely proper. There is no requirement that the applicant shall in all cases from the date of application to the date of issue assert claims as broad in scope as those ultimately allowed. Wirebounds Patents Co. *et al. v.* Saranac Automobile Machine Corp., 37 Fed. (2) 880 (C. C. A. 6); Auto Pneumatic Action Co. *v.* Kindler & Collins, 247 Fed. 323 (C. C. A. 2). This defense may not be sustained.

The interference between the application in suit and DeForest Patent No. 1,489,314 was won by the patentees in the tribunals of the Patent Office and the Court of Customs & Patent Appeals. The DeForest invention subsequent to the invention of the patent in this suit.

The appellee argues that the patent in suit is invalid under the provisions of Revised Statutes § 4887 because of the issuance of a French patent No. 532,750, twelve months before filing the application of the patent in suit. To constitute invalidity of the present patent by the French application, it must be shown that the inventions actually claimed in that foreign country and those of the patent in suit are identical. It is not enough to say that the French patent may disclose the invention of the later United States patent, when it is not therein claimed. Leeds & Catlin *v.* Victor Talking Machine Co., 213 U. S. 301; General Electric Co. *v.* Alexander, 280 Fed. 852 (C. C. A. 2). The question becomes one of identity between them. There is no such identity here. The French patent is for a photo-phonetic film, namely, an apparatus or product claim, which cannot be identical with or fatal to a process claim. Leeds & Catlin *v.* Victor Talking Machine Co., *supra;* Fireball Gas Tank & Illuminating Co. *v.* Commercial Acetylene Co., 239 U. S. 156. The French patent is essentially a proposal for escaping from the difficulties of recording natural sounds accompanying the action. The significance of the independent recording of concomitant sounds is apparent from the language of the specification. Nowhere in the French

claims or specification is there a suggestion of the characteristic feature of separate and independent development of the negatives to compensate for different exposure in recording. The purpose of the French patent was to avoid the photographing of sounds "from sources which are scenic". Here the purpose is just the opposite. The distortions of sound and pictures which apparently had been unavoidable in single film practice and which had made scoring preferable have now been removed. The French patent in no way treats of separate development.

The patentees fully complied with Revised Statutes §4887 as to the French patent by filing an application substantially identical therewith in the Patent Office of the United States on April 4, 1921, ten days after the filing of the French application. While the application was pending in the United States, they filed a German application for the invention here in suit, and within the allowed period, thereafter filed the United States application for the patent in suit. The two United States applications were thus co-pending, and while the patentees have been insistent and consistent in their position that the inventions covered by the successive patents were not the same, still, if the inventions were the same, the first United States patent was filed within the convention period and their second application, being copending, is true continuation of the first. Novadel Process Corp. *v.* J. P. Meyer & Co., 35 Fed. (2) 697 (C. C. A. 2); Victor Talking Machine Co. *v.* American Graphaphone Corp., 145 Fed. 350 (C. C. A. 2).

The appellee's process infringes the claims in suit. The stipulation provides that the appellee's process for producing a combined sound and picture positive film for talking motion pictures comprises recording photographically a sequence of pictures on one length of film and simultaneously recording photographically a series of sounds accompanying the scenes on a separate film. The picture negative and sound negative are developed separately and

in different developers. The choice of developers and the time of development being such as to give the desired result. The picture and sound negatives thus separately made and separately developed are printed successively in properly spaced relation on the same surface of a positive film. In this manner a single positive film carrying the sound sequences and picture sequences is produced. There is no material difference between the purpose for which the appellee uses the process and that described in the patent. In any case, the appellee uses the process of the patent and achieves the results intended by the patentees. The patent is valid and infringed.

Decree reversed.

SWAN, *J.* Dissenting.

FILE COPY

FILED
OCT 1 19
CHARLES ELMORE CR
CLE

IN THE

Supreme Court of the United States,

OCTOBER TERM, 1934.

No. 254

PARAMOUNT PUBLIX CORPORATION,
Petitioner,

vs.

AMERICAN TRI-ERGON CORPORATION,
Respondent.

REPLY BRIEF ON BEHALF OF PETITIONER.

CHARLES NEAVE,
HENRY R. ASHTON,
Counsel for Petitioner.

The Evening Post Job Printing Office, Inc., 154 Fulton St., New York, N. Y.

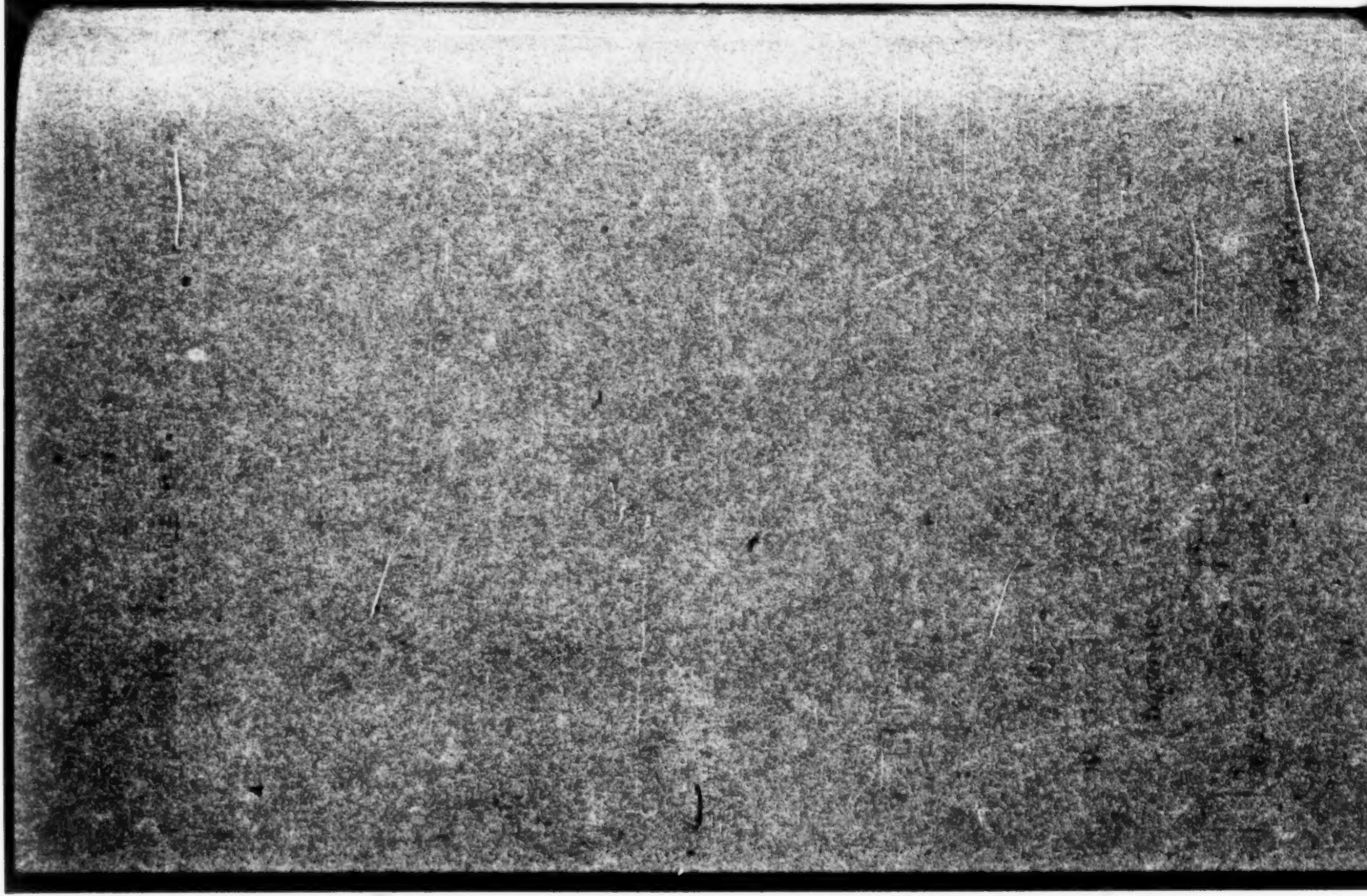

In the

Supreme Court of the United States.

OCTOBER TERM, 1934.

No. 254.

Paramount Publix Corporation,
Petitioner,

vs.

American Tri-Ergon Corporation,
Respondent.

REPLY BRIEF ON BEHALF OF PETITIONER.

A reply brief is being filed herewith in cases No. 255 and 256, *Altoona Publix Theatres Inc. and Wilmer and Vincent Corporation, et al. Petitioners* v. *American Tri-Ergon Corporation, et al., Respondents,* on one of the grounds only of the petition, namely, that having to do with respondents' disclaimers. The same ground is relied upon in the petition and brief in this case (Petition and brief, pp. 12 and 30).

The statement made in the reply brief in cases Nos. 255 and 256 applies equally in the present case. In order to avoid unnecessary reading we are not reprinting that statement here, and request that it be considered as made herein.

Respectfully submitted,

Charles Neave,
Henry R. Ashton,
Counsel for Petitioner.

September, 1934.

FILE COPY

FILED
OCT 31 1
CHARLES ELMORE

IN THE

Supreme Court of the United States,

OCTOBER TERM, 1934.

No. 254.

PARAMOUNT PUBLIX CORPORATION,
Petitioner,

vs.

AMERICAN TRI-ERGON CORPORATION,
Respondent.

PETITION FOR REHEARING OF PETITION FOR A WRIT OF CERTIORARI TO THE CIRCUIT COURT OF APPEALS FOR THE SECOND CIRCUIT.

CHARLES NEAVE,
THOMAS G. HAIGHT,
Counsel for Petitioner.

October, 1934.

The Evening Post Job Printing Office, Inc., 154 Fulton St., New York, N. Y.

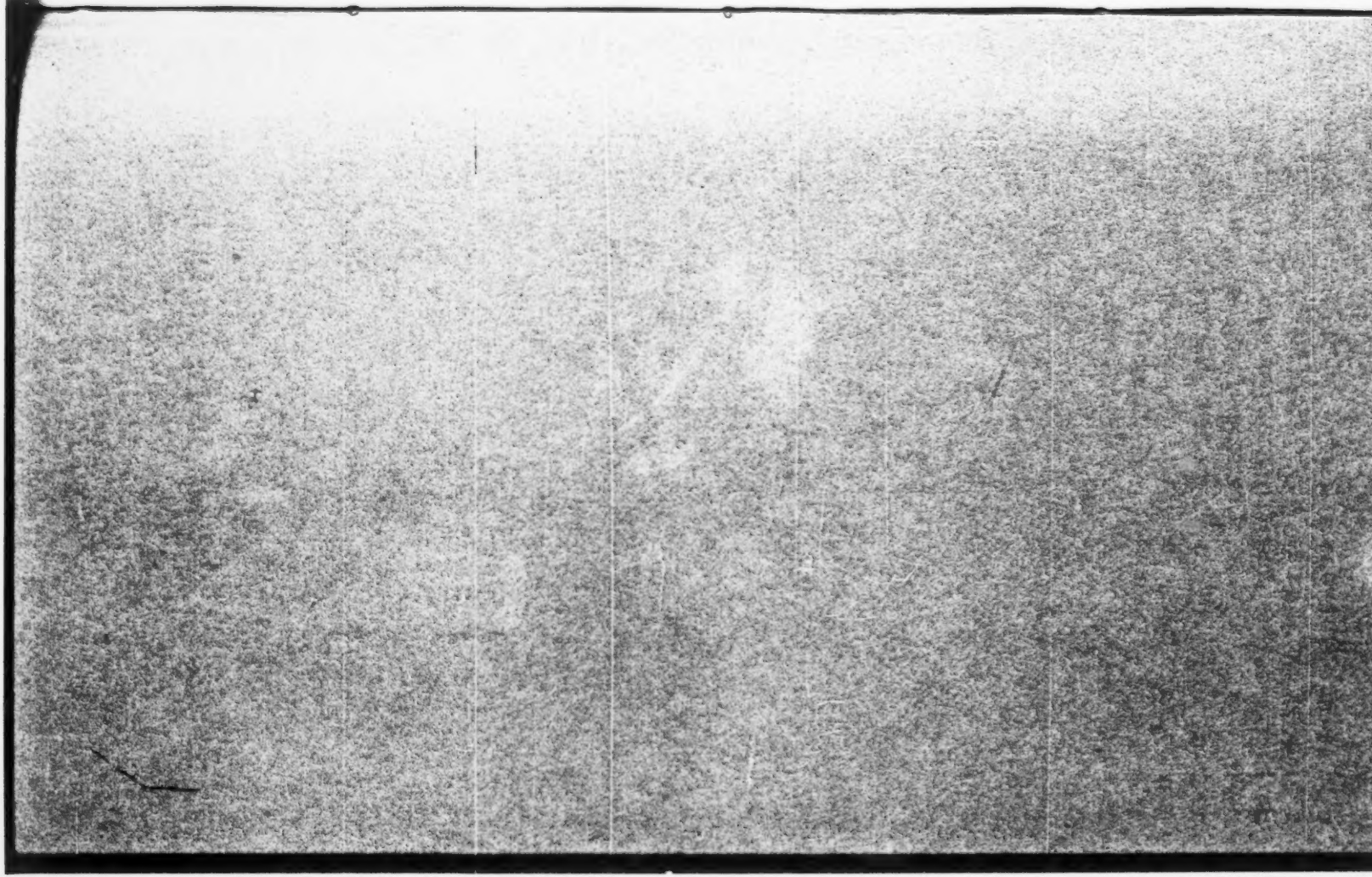

Supreme Court of the United States

No. 254, OCTOBER TERM, 1934.

PARAMOUNT PUBLIX CORPORATION,
Petitioner,

AGAINST

AMERICAN TRI-ERGON CORPORATION,
Respondent.

PETITION FOR REHEARING.

TO THE HONORABLE THE CHIEF JUSTICE AND THE ASSOCIATE JUSTICES OF THE SUPREME COURT OF THE UNITED STATES:

Respondent, owner of a patent for a "process for producing combined sound and picture films", brought an infringement suit in the District Court of the United States for the Eastern District of New York against the petitioner, a producer of talking motion pictures. The District Court held the patent invalid (4 Fed. Supp. 462, per Campbell, *D. J.*). The Circuit Court of Appeals (Manton and Chase, *J.J.*—Judge Swan dissenting without opinion, 71 Fed. (2) 153) held the patent valid and infringed and reversed the decree of dismissal entered by the District Court.

There is no conflict of decisions, as between different Circuits, on the question of the validity of this patent. This is the only case that has gone to decision on that question. On October 8 last, this Court denied our petition for a writ of certiorari herein.

Events have occurred since the denial of the writ which clearly take the case outside the general rule requiring a conflict of decisions as a prerequisite to the grant of a

writ of certiorari in the ordinary patent case. In accordance with precedent[1] we call these intervening circumstances to the attention of the Court, suggesting that they require that the Court shall not refuse to review this case at this time unless satisfied of the soundness of the decision below on the question of the validity of this patent.

POINT I.

Since the denial of the writ of certiorari the overwhelming majority of motion picture producers have been sued in the Second Circuit where the Courts are committed on the validity of the patent; and respondent can thus achieve its purpose without extending litigation beyond the Second Circuit. Therefore, the Court should not dispose of this petition upon the mere ground of lack of a conflict of decision.

We have no quarrel with the rule which absolves this Court, in the absence of a conflict of decisions, from granting a writ of certiorari in an ordinary patent case involving ordinary issues of validity and infringement.[2] In the usual course of patent litigation the opportunity exists and is exercised of having suits brought and determined in several Circuits involving the same or substantially the same issues of validity and infringement, and in this process it may reasonably be expected that issues

[1] *Brinkerhoff-Faris Co.* v. *Hill*, 280 U. S. 550; 281 U. S. 673; *Olmstead* v. *U. S.*, 276 U. S. 609; 277 U. S. 438; *St. Louis Union Trust Co.* v. *Mellon*, 231 U. S. 648; 241 U. S. 657; 242 U. S. 666; *Helvering* v. *Northern Coal Co.*, 290 U. S. 59; *Sanitary Co.* v. *Winters*, 278 U. S. 587; 280 U. S. 30, 34.

[2] *Keller* v. *Adams-Campbell Co.*, 264 U. S. 314, 319; *Layne & Bowler Corp.* v. *Western Well Works*, 261 U. S. 387, 392, 393.

of fact will be thoroughly explored; that upon such full investigation by the courts primarily charged with the duty of determining patent controversies, any reasonable ground for a difference in view upon questions of law will find abundant opportunity for judicial expression; and that ultimate conflicts of view may be limited to some only of the issues involved.

But the instant decision of the Circuit Court of Appeals for the Second Circuit is not the mere beginning of patent litigation which will extend into the several circuits. By reason of peculiar circumstances the respondent is in a position to confine this litigation to the Second Circuit where the Circuit Court of Appeals is committed to the view that this patent is valid, and respondent's actions since the denial of the writ make it plain that it plans so to confine the litigation. There are listed in the margin[3] motion picture producers against whom suits for infringement of the patent at bar have been instituted in the Second Circuit by this respondent since the denial of certiorari by this Court in this case. With the exception

[3] Metro-Goldwyn-Mayer Corporation and Metro-Goldwyn-Mayer Distributing Corporation,
Warner Bros. Pictures, Inc. and The Vitaphone Corporation,
Columbia Pictures Corporation,
First Division Pictures, Inc.,
Universal Pictures Corporation,
Consolidated Film Industries, Inc.,
Twentieth Century Pictures, Inc.,
Ameranglo Corporation,
Monogram Pictures Corporation,
Reliance Pictures, Inc.,
Talking Picture Epics, Inc.,
Consolidated Film Industries, Inc.,
Producers Laboratories, Inc.,
Malcolm Laboratories Corporation,
H. E. R. Laboratories, Inc.,
Filmlab, Inc.,
Cinelab, Inc.,
Du Art Film Laboratories.

of one company that claims to own the patent[4] and one company[5] against whom a suit was filed in Delaware in November, 1931, in which no action has since been taken, these companies comprise *all* of the large sources of production of motion pictures, including substantially all of the producers and processors in the United States. A decree of infringement in the Second Circuit against any infringer will bind it not only in that Circuit but throughout the whole United States, and will permit the patent owner, in further proceedings in the Second Circuit, to have accounting for infringements occurring anywhere in the United States.[6]

We believe that these facts make it apparent that the respondent plans to confine this litigation to the Second Circuit in which it has received a favorable decree. The opportunities of the respondent to coerce the industry upon the basis of the decision of the Circuit Court of Appeals for the Second Circuit in this case are enhanced by the fact that the motion picture industry is a "quick" industry whose business cannot tolerate delay.

We do not present the above considerations as reasons why this Court should *grant* the writ of certiorari. We present them as reasons why, we submit, the Court may not justly deny the writ in this case without satisfying itself of the soundness of the decision below.

Our petition is not grounded upon the mere importance of the patent to the industry, without more[7]; nor upon the mere plea that the amounts claimed are large; nor do we contend that the Court should review the present

---

[4] Fox Films Inc.

[5] R. K. O. Radio Pictures Inc.

[6] *Leman* v. *Krentler-Arnold Co.*, 284 U. S. 448, 451, 452.

[7] An argument unsuccessfully advanced in many petitions for writs of certiorari in patent cases, notably in *Radio Corporation* v. *Lord*, 278 U. S. 648.

decision in the first suit brought upon this patent merely in order to obviate a multiplicity of suits in many jurisdictions.[8] Our contention is that the special circumstances herein stated take this case out of the general rule relating to the issue of certiorari in non-conflict patent cases.

The reason for the rule governing the normal exercise of this Court's discretion in the issue of certiorari having failed in this case, the rule falls with it. In analogous situations the Court has exercised its discretion to review upon a showing that the remedy by normal proceedings in other Federal courts was lacking.[9]

[8] A contention forcibly but unsuccessfully presented by the infringer in *City of Milwaukee* v. *Activated Sludge, Inc.* certiorari denied, No. 165 of the present Term.

[9] Thus this Court will not grant leave to file a petition for a writ of mandamus to a District Court in a case not directly reviewable by this Court on appeal from such court, except upon a showing that the question involved is one of such general importance that it should be determined by this Court at the outset,—the reason for the rule being that the petitioner may secure the same relief by mandamus from the Circuit Court of Appeals (*Ex parte United States,* 287 U. S. 241, 248, 249; *Ex parte Grubbs,* 293 U. S. (decided Oct. 8, 1934)). But where it is shown to this Court that the Circuit Court of Appeals to which the petition for mandamus would be addressed has already in another case decided the point of law involved adversely to the petitioner's view, the remedy in the lower Federal court, being no remedy at all, has not prevented this Court from granting leave to file the application for mandamus and considering the merit of it. *Ex parte Baldwin,* 291 U. S. 610.

Again, there is a familiar rule that even though a case for *habeas corpus* be made out, and although this Court has the power to issue the writ, it will not ordinarily exercise its power because the same relief is available to the petitioner before a District Court in his own locality. *Ex parte Mirzan,* 119 U. S. 584; *In re Huntington,* 137 U. S. 63. But where the District Court to which the writ would lie was also the committing court, so that relief before it would have been futile, this Court exercised its discretion to grant the writ. *Ex parte Terry,* 128 U. S. 299, 302; *In re Sawyer,* 124 U. S. 200.

It should also be borne in mind that the decision which is thus being used to coerce substantially the entire industry—without opportunity for subjection to the corrective process of review and consideration in other Circuits—is a decision by an equal division of judges in the Second Circuit. The fact finding of the District Judge who heard and saw the witnesses in open court received support from the dissent of Circuit Judge Swan. Circuit Judges Manton and Chase took the opposite view.[10]

These considerations lead us with confidence to invite the Court to a brief consideration of the question of invention, upon this broader basis of inquiry.

[10] The case of *E. H. Ferree Co.* v. *United Shoe Machinery Co.*, 64 Fed. (2) 101; 290 U. S. 614; 290 U. S. 708, presents striking parallels to the case at bar. In that case the respondent sued for infringement of an improvement patent on a "clicking machine" used in manufacturing shoe uppers. The machine was old, and the invention related solely to the use of an aluminum alloy in place of cast iron in constructing a swinging arm which performed the functions of a hammer in striking the material onto the die. Applying the rules which this Court has announced with respect to the substitution of materials to the facts in the particular case before him, the District Court found and held that the substitution in that case did not amount to invention. The Circuit Court of Appeals, in an opinion by Judge Manton, reversed and held the patent valid and infringed, principally upon the ground that respondent's patent had had commercial success and had been quickly adopted by its competitors. The petition for certiorari disclosed no conflict of decisions, and the real question was whether the Circuit Court of Appeals had not erred in failing to give proper effect to the facts found by the District Court on the issue of invention. This Court granted a writ of certiorari (290 U. S. 614) but the case was dismissed upon stipulation before it was called for argument in this Court (290 U. S. 708).

The Circuit Court of Appeals reached an erroneous conclusion on the question of invention and in doing so disregarded the findings of fact made by the Trial Judge.

The patent is for a method of producing positive film prints for talking pictures having a photographic record of action and a photographic record of the accompanying sound printed side by side on its face,—an old product not claimed by the patentees.

The method described consists in photographing the action and photographing the sound simultaneously on separate negatives, developing the negatives separately in a manner appropriate to each, and printing both negatives side by side on the same positive film.

The making of separate negatives of sound and picture to permit the desirable separate development of each negative according to its needs, followed by separate printing on separate positive films was old.[11]

Hence the question was presented whether it required invention to print the separately developed negatives side by side on the same positive film.

The District Court held invention was not required, basing its decision upon a finding of fact, supported by the testimony of witnesses who appeared before it, that those skilled in the art of photography already knew that separately developed negatives could be printed side by side on the same positive film.

The testimony of the witnesses Jones (R. Vol. I, p. 1196) and Nonnenbacher (R. Vol. I, p. 131) fully support the

[11] "The other system, the double film system, records sound and pictures simultaneously on separate films. Here the picture negative is developed and printed on one positive film and the sound negative is separately developed and separately printed on another positive film." (Opinion of Circuit Court of Appeals, Vol. III, p. 1226.)

finding made by the District Judge (R. Vol. III, p. 1196) that printing "of the separate negatives on a single positive film" was old in the photographic art, being used "in both still and motion pictures, long before any date important here". The Biograph Company, at least as early as 1908 in making motion pictures, took two series of pictures, each on separate motion picture films, developed them separately in a manner appropriate for each, and printed them on the same side of the same positive film (Nonnenbacher, Vol. I, pp. 128-134).

We attach to the opposite page copies of plaintiff's Physical Exhibit 12A and defendant's Physical Exhibits A and C, being pieces of motion picture film suitably mounted and identified.

Plaintiff's Exhibit 12A illustrates the process of the patent in suit and also defendant's process held to infringe. The film at the left is the negative of the action, the film in the center is the negative of the sound record, and the positive film at the right is the print of the two negatives together on one film.

Defendant's Exhibits A and C illustrate the process used by the Biograph Company in 1908, referred to above. The negative film at the left is the picture of the Music Master, the negative film in the center is the picture of the Master's Dream, and the positive film at the right is the print of the two negatives together on one film.

In both processes, the two negatives are taken separately on separate films, the separate films are developed separately in a manner appropriate to each, and printed on the same side of a single positive film.

The Circuit Court of Appeals did not dispute this finding of fact, but held that invention was involved nevertheless.

In reaching this conclusion, the Circuit Court of Appeals gave controlling weight to testimony showing widespread adoption of the patented process by the talking picture industry and other evidences of commercial success. So to decide the question of invention is to decide that the evidence of commercial success outweighs the

direct testimony of witnesses familiar with the available knowledge of the art on this question of fact whether the art knew how to print two separately developed negatives side by side on a single positive print.

The controlling decisions of this Court hold that while commercial success and other like considerations may, *in case of doubt,* resolve the question of invention in favor of a patentee, yet such considerations can be given no weight where the patentee disclosed no more than was already known to those skilled in the art.[12]

The fact finding of the District Judge, based as it was upon testimony given by witnesses who appeared before him at the trial, should, we submit, have been treated as unassailable on appeal under the rule of *Adamson* v. *Gilliland,* 242 U. S. 350,[13] and left no room for inferences that may properly be drawn where there is doubt with respect to whether the patentee disclosed anything new.

Respectfully submitted,

CHARLES NEAVE
THOMAS G. HAIGHT
Of Counsel for Petitioner.

October, 1934.

I hereby certify that the foregoing petition is presented in good faith and not for delay.

CHARLES NEAVE

---

[12] *DeForest Radio Co.* v. *General Electric Co.,* 283 U. S. 664, 685; *Hotchkiss* v. *Greenwood,* 11 How. 248, 254; *Smith* v. *Nichols,* 21 Wall., 112, 114.

[13] The rule referred to is the practical rule that findings of fact made by the trial judge must be accepted on review in equity suits, where his findings depend upon conflicting testimony, or upon the credibility of witnesses. In *Adamson* v. *Gilliland,* this Court said that a patent case is preeminently one for the application of this rule.

INDEX

Page

Opinions Below 1

Jurisdiction 1

Question Presented 2

Statement 3

Specification of Errors 18

Summary of Argument 18

Argument:

I. Applying the principles laid down in the decisions of this Court to the facts of this case, it is obvious that the patent in suit discloses nothing amounting to invention..... 22

II. The Circuit Court of Appeals was wrong in holding that the Wente application created an estoppel or presumption against the petitioner 31

III. The contention of the respondent which was accepted by the Circuit Court of Appeals, that the problem of putting two separately developed negatives on a single positive by a printing process was too much for the research laboratories in this country, and that the solution was revealed by these patentees to the Western Electric Company in 1927 and then appropriated by it, is without any support in the record..... 34

IV. Claims 8 and 9, which omit separate development, in addition to being invalid for the foregoing reasons, are invalid as being for a broader alleged invention than that disclosed in the application as filed, and clearly anticipated..... 41

Conclusion 42

Appendix:

History of Patent No. 1,825,598, issued September 29, 1931, on the application, filed March 29, 1922, of Vogt, Massolle and Engl 43

Drawing taken from Ries patent (R. 592) showing positive film with pictures and sound record side by side 47

Chart showing successive printing of picture and sound negatives on single positive film 48

Reproduction of "Music Master" film and physical Exhibit 12A.. 49

CITATIONS

Page

Cases:

Aron v. *Manhattan Ry. Co.*, 132 U. S. 84 22

Brown v. *Piper*, 91 U. S. 37 26

Concrete Appliances Co. v. *Gomery*, 269 U. S. 177.....22, 27

Dashiell v. *Grosvenor*, 162 U. S. 425 29

DeForest Radio Co. v. *General Electric Co.*, 283 U. S. 664..22, 23, 28, 41

Dreyfus v. *Searle*, 124 U. S. 60 27

DuBois v. *Kirk*, 158 U. S. 58 32

Grinnell Washing Machine Co. v. *Johnson Co.*, 247 U. S. 426.... 22

Haughey v. *Lee*, 151 U. S. 282.....20, 33

Hollister v. *Benedict Mfg. Co.*, 113 U. S. 59 22

Penn. Railroad v. *Locomotive Truck Co.*, 110 U. S. 490..... 27

Pickering v. *McCullough*, 104 U. S. 310 29

Powers-Kennedy Contracting Corp. v. *Concrete Mixing & Conveying Co.*, 282 U. S. 175 .....22, 41

Railway Co. v. *Sayles*, 97 U. S. 554 41

Saranac Machine Corp. v. *Wirebounds Patent Co.*, 282 U. S. 704 22

Authority:

Walker on Patents, 6th Ed., pp. 126-1 29

IN THE

Supreme Court of the United States

OCTOBER TERM, 1934.

No. 254.

PARAMOUNT PUBLIX CORPORATION,
Petitioner,

vs.

AMERICAN TRI-ERGON CORPORATION,
Respondent.

BRIEF FOR PETITIONER

OPINIONS BELOW

The opinion of the District Court (R. 1173) is reported in 4 Fed. Supp. 462. The opinion of the Circuit Court of Appeals (R. 1225) is reported in 71 Fed. (2d) 153. Judge Swan dissented, but wrote no opinion.

JURISDICTION

The judgment of the Circuit Court of Appeals was entered June 11, 1934 (R. 1233). The petition for certiorari was filed August 6, 1934, and granted November 5, 1934. The jurisdiction of this Court rests on Section 240(a) of the Judicial Code as amended by the Act of February 13, 1925, c. 229, 43 Stats. 938; U. S. C. A., Title 28, Sec. 347.

QUESTION PRESENTED

This is a patent infringement suit. Claim 5 of the patent, said to be typical, is as follows:

> "A process for producing a combined sound and picture positive film, for talking moving pictures, comprising, photographing a sequence of pictures on one length of film, and simultaneously photographing on another length of film a corresponding sequence of sounds accompanying the action, separately developing the two negatives in a manner appropriate for each, and printing the sound and picture negatives respectively upon different longitudinally extending portions of the same sensitized film, to form the sound sequence at one side of and along the picture sequence" (R. 469).

The primary purpose of the process, stated in the specification, was the separate development of the picture and sound negatives in a manner appropriate for each. The process involved three steps:

> (a) Photographing the picture and sound on separate lengths of film, or accomplishing the same result by recording on a single film to be split longitudinally before development;
>
> (b) Separately developing the two negatives;
>
> (c) Uniting them by printing side by side on a single positive film.

No questions of infringement or utility are involved.

The principal question is whether, in view of the prior art, there was any invention.

The petitioner contends that the steps of the process were separately and collectively old, that the

advantages of each step were previously known, and that the decision of the Circuit Court of Appeals runs counter to the decisions of this Court upon the question of invention, including those which hold that the application of an old process to a new subject matter is not invention.

STATEMENT

Despite the size of the record this case is a simple one. The suit was brought by the respondent, American Tri-Ergon Corporation, against the petitioner, Paramount Publix Corporation, for infringement of patent 1,825,598, granted September 29, 1931, on an application filed March 29, 1922, by three Germans, Vogt, Engl and Massolle. The respondent is a patent holding company, organized in 1928, and which, as far as the record shows, has taken no part in the motion picture industry, either by production of motion pictures, furnishing of equipment or granting of licenses. The petitioner is a producer of motion pictures, and the defense of this suit has been conducted on its behalf by Electrical Research Products, Inc., a subsidiary of the Western Electric Company (R. 103).

The District Court held the patent void. It held that the steps in the patented process were separately and collectively old (R. 1183), and that "the patentees made no contribution to the art of photography" (R. 1196).

The Circuit Court of Appeals (Judge Swan dissenting) reversed the District Court and held the patent valid.

Several methods have been used for recording and reproducing sound with motion pictures. One is the disc system, by which the sound is recorded on and reproduced from discs by the use of a stylus or needle. Another is the photographic film system, by

which the sound is photographed on and reproduced from film. The film system used by the petitioner, is known as the "variable density method". The sound waves reaching a microphone are converted into electric currents which, after being amplified, cause vibrations in two metal threads placed to form a narrow slit about 1/1000 of an inch wide, called a "light valve" (R. 29, 1000), the vibrations of which correspond to the frequency and intensity of the sound waves (R. 29). Through this slit light is passed on to a moving-strip of film, on which is thus photographed a record of the variations in the light passing through the slit between the metal threads (R. 316, 1000). When this record is developed and a positive print made, it has the appearance of a ladder of parallel lines of varying density (shown on the right edge of the illustration from the Ries patent copied in the appendix hereof on page 47). In the reproduction of the sound the film is run through an apparatus in which a line of light passes through the film on to a photoelectric cell, in which electric currents are thus excited, which are amplified, and through loud speakers reproduce the sound (R. 326, 1001).

THE PATENT IN SUIT

The title of the patent is "Process for producing combined sound and picture films".

Each of the claims in suit (R. 469) (Claims 5, 6, 7, 8, 9 and 11) is for a photographic process only. The specification for the patent states:

> "In the production of speaking films it is of great advantage especially from the point of view of use, to arrange the sound sequence and the picture sequence upon one and the same piece of material (film).
>
> In this procedure, however, there frequently

occur in consequence of the changing lighting conditions in the cinematographing process, changes in the degree of exposure of the silver bromide coating, and this causes the picture sequence to be either overexposed or underexposed.

As the same film, however, carries close to the picture sequence the normally exposed sound sequence, these difficulties resulting from differences in exposure cannot be remedied in the case of combined negatives, by developing practices such as by weakening, strengthening and so forth. They can only be remedied by subjecting the underexposed or the overexposed portions of the negative to separate appropriate treatments.

Technically, this treatment is practically impossible so long as the two sequences—picture and sound—are photographed upon the same film strip.

According to the present invention the difficulty is overcome by either employing entirely separate films for the simultaneous photographing of the sound and picture negatives, or films which are connected during the photographing, but which are separated from one another before the developing, then separately developing the negatives if and in the manner required to remedy the difficulties, and then printing both sequences—picture and sound—on the different portions of the same positive film.

The synchronism is assured in both cases by the perforations and/or by corresponding marks. The production of the combined positive film can take place by copying the two negative films—sound and picture—preferably consecutively upon the same positive film" (R. 468, ll. 4-50).

This states the whole of the supposed problem and of the solution suggested by the specification. The patented process involves three steps:

> (a) Simultaneously photographing the sound and picture negatives so as to allow separate development either by photographing the sound and picture on separate films, or by photographing them on one film and splitting it longitudinally before development;
>
> (b) Separate development of the sound and picture negatives in a manner appropriate for each;
>
> (c) Preparing a single positive film containing both sound and picture by printing the two negatives either in one operation or successively side by side on a single strip of positive film.

It aids in understanding what the patented process is, to know what it is not.

The patentees assume that the method of recording sound on and reproducing it from film was old (as it was), and offer no contribution to that art.

They do not claim to be the first to point out the advantage of separate development and assume that to be well known, as it was.

They offer no contribution whatever to the method of development either with respect to emulsions or developers or machines. They merely describe the steps by which the negative records may be separated or kept separate through the developing process.

When it comes to the last step, printing the two developed negatives on a single positive, they do not claim to be the first to point out the advantages of a single positive containing both records. The single positive containing both was old.

The patentees merely refer in their specification to the fact that:

> "it is of great advantage, especially from the point of view of use, to arrange the sound sequence and the picture sequence upon one and the same piece of material" (R. 468, ll. 4-8).

That final step, printing on a single positive film, is not aimed at quality. The advantage of the single film positive for projection is convenience in use (R. 380-1).

Neither do the patentees suggest any method or machine or apparatus by which the two negatives may be simultaneously or successively printed on the same side of a single positive film. They assume, as the fact was, that such methods and machines were known and available.* As an alternative method of printing, the patentees in their specification say:

> "One can, however, previous to the printing, unite longitudinally together the two developed negative films, and then copy this so united negative in *the usual manner*" (R. 468, ll. 79-82). (Italics ours.)

---

* The illusion of motion in pictures is produced by recording and projecting a rapid succession of still pictures of a moving object. It results that the picture film has an intermittent motion. In recording and reproducing sound, the motion of the film is continuous. The positive film passing first through the picture head or projector, then passes on into the sound head or reproducer, the section of the sound record in the sound head corresponding with the pictures then in the picture head. Therefore, in printing the pictures and sound record on a single positive film the sound record is advanced to a point on the film beyond the picture it accompanies.

It is a fact conceded by both parties and both courts below that the method of recording the sound and pictures alongside each other on a single strip of negative film, developing them together and printing this negative on a single positive strip was old. It was likewise conceded that the method of recording the sound and pictures on separate strips of film, of separately developing them in a manner appropriate for each and of separately printing them on two separate strips of positive film, was old (R. 81-2). It was also conceded that the advantages of separate development of the negatives of sound and pictures were known and old, and that the advantages in use of a single positive film were known and old.

The patentees had one very simple purpose, namely, to give separate developments to the sound and picture negatives and still finish up with the old single positive for exhibition, because of its obvious and well known convenience in use.

PRIOR KNOWLEDGE AND PRACTICES

An early example of the single positive film containing the sound and the pictures side by side is the Haines British patent 18,057 of 1906 (R. 1074), which discloses sound and pictures simultaneously recorded on the same negative, which, after development was printed on to a single strip of positive film (R. 1086; Figure 2).

Similar films are shown in the Ries patent applied for in 1913 (R. 593), and in the French patent to MacCarty of 1912 (R. 928). MacCarty recites the mechanical advantages in having sound and picture records on a single film for projection (R. 932).

The patent to Walker, applied for September 2, 1913 (R. 857), covers apparatus, including a camera,

simultaneously to record pictures and sound on a single film. He provides apparatus for *successively* printing pictures and sound on a single positive from a single negative strip of film on which both sound and picture sequences are recorded. His reason for successive printing was to enlarge the sound record in printing to improve the quality of the sound reproduction. It will be noted that his process of *successively* printing sound and pictures from a single negative on to a single positive differed in no respect *as a process* or in the apparatus required, from printing *separate* negatives of sound and pictures *successively* on a single positive strip.

The photographic printing* of two separately developed negatives on one positive film, which is the last step of the process in the patent in suit, is old in photographic practice, and is termed "composite" or "combination" printing. The head of the Physical Research Laboratory of the Eastman Kodak Company, an eminent authority in this field, testified as follows:

> "Q103. Does the process of the patent in suit involve any photographic operations which are not involved in the ordinary art of composite printing, and if it does involve some additional operations, tell us what they are? A. It involves nothing other than that known in the art of composite printing.
>
> Q104. How about in composite printing using and *subjecting the two negatives to different lengths of development?* Was that done or was it not done? A. Very common.

---

* Photographic printing of separate sound and picture negatives on a single positive film is illustrated on page 48 of the appendix of this brief.

Q105. Did you do that composite printing yourself prior to April, 1921? A. Yes, I have often made prints, printing in clouds into landscapes without the clouds and other types of composite printing. It was commonly used in pictorial photography.

Q106. How early did you do that? How far back did you do that work yourself? A. Oh, I imagine about in 1900.

Q107. And the Eastman Company, did it have any experience, so far as you know, with composite printing prior to April, 1921? A. Well, of course, the art and practice of composite printing has been so general that the Kodak Company has made materials which have been used for that purpose, in many cases special materials for the practice of combination printing.

Q108. Now, will you state the steps involved in making composite prints such as you did them prior to 1921, and such as Eastman did them prior to 1921, beginning with the making of the separate records? A. Well, two or more negatives are exposed, either on the same or different objects. *These exposed negative materials are then developed separately in such a way as to give images of the character required for the subsequent operation of making the combination print. These are then printed together on a single piece of photographic material.* They may be either adjacent, juxta-posed, or superposed, in register, on the same face or on opposite faces, as the case may be. There are any number of possibilities of combining the negatives in making combination printings" (R. 166-7).

This was such common practice among photographers that it was described in the standard photo-

graphic dictionaries published both here and abroad in 1894, 1896, 1906 and 1912 (R. 161-6).

The earlier examples of composite printing related, of course, to still pictures. In the dictionary published in 1896, it is stated (R. 161):

> "Combination Printing: A method of printing in which the whole or portions of two or more negatives are combined."

In the dictionary of 1906, it is stated (R. 166):

> "it will often be necessary to develop one or (the) other of the individual exposures somewhat longer, or harder, or possibly softer. Such individual treatment of each exposure is obviously impossible, where all three exposures are made on one plate."

The trial court found (R. 1199) that, as early as 1908, it was common in the motion picture industry to take two series of pictures, each on a separate negative film, develop them separately, and print them on the same side of a single positive film (R. 128-134). The Biograph Company made and released in 1908 a motion picture known as the "Music Master" (R. 844), in which two separate scenes were taken on separate films, one of a man dreaming, and the other the scene of his dream (R. 131). These were separately developed and then printed on the same side of a single positive (R. 131-2), the picture of the dreaming man occupying one part of the film and the dream picture another.

In the Appendix (p. 49) we have placed copies of Petitioner's Physical Exhibits A and C, consisting of three films, two negatives and the positive printed from them. The originals of the two negatives are

those from which a moving picture was made by the Biograph Company and released in 1908 (see that Company's printed circular, dated May 6, 1908, R. 844). The negative at the left is of the "Music Master"; the negative in the center contains the Master's Dream. Those two negatives were separately developed (R. 131) and then the two were consecutively printed on the positive film at the right (R. 131-2).

For convenient comparison of this practice of the Biograph Company with petitioner's process and also the process of the patent in suit, we have placed on the same page in the Appendix copies of the films which compose Respondent's Physical Exhibit 12-A. These films illustrate the process of the patent in suit and also petitioner's process held to infringe. The film at the left is the negative of the moving scene. The film in the center is the negative of the sound, and the positive film at the right is the print of the two negatives together on one film.

The Rossi British patent of 1909 (R. 882) contains in Figure 1 a negative motion picture film with photographs in the upper half only; in Figure 2 another negative film with photographs on its lower half only; and Figure 3 shows the positive film printed by means of the two preceding negative films (R. 888, ll. 23-4), so that two separate series of motion pictures were recorded on separate films, developed while separate and then printed side by side on a single positive film.

The Messter patent, applied for March 25, 1914 (R. 873), shows two series of motion pictures simultaneously recorded (R. 874, ll. 64-7), developed while separate and then printed side by side on the same side of a single strip of positive film (R. 874, ll. 77-82). The object of Messter's invention was to substitute

motion pictures of an orchestra conductor for the real thing, recording on one negative a face view of the conductor in action and on another negative film a rear view, which after development were combined in printing, as above stated and projected so that the audience saw one picture and the orchestra the other (R. 874, ll. 9-22). While his product had no commercial value, he had no difficulty with the photographic process of separate recording, separate development and printing on a single positive.

The patent to Bullis of 1920, applied for in 1915 (R. 716), is for talking-picture apparatus. He states that the object of his invention is to provide apparatus:

> "whereby the picture record and sound record can be given the necessary individual treatment for developing them in the most effective manner and then readily assembled in such a manner as to bring the picture record and sound record in proper position to produce perfect synchronism when the pictures and sound are reproduced.
>
> "Further objects of the invention are to provide a device of this character which is comparatively simple and inexpensive in its construction, which admits of different emulsions and different treatments being employed in making the picture record and sound record, which provides corresponding identification marks upon the picture record and sound record so that there will be no difficulty in assembling the two records in the proper relation for the reproducing operation, which admits of the picture record and sound record being handled separately while being developed and subsequently joined together so as to produce a single film if such is desired, and which

provides for reproducing the sound from a continuously moving portion of the film and the reproduction of the picture by an intermittently moving portion of the film" (R. 716; ll. 17-47).

The use of his apparatus involves simultaneous recording of sound and pictures on separate films (R. 716, ll. 99-102) and their separate development (R. 716, ll. 19-27). Bullis carried his separate treatment of the two records to the point of providing for separate development of the positives, so that the sound and picture records were kept separate past the printing operation (R. 719, ll. 90-100). He suggests uniting the two positive prints by cementing them together (R. 719, ll. 60-62, 97). He discloses all that the patent in suit does past the point of separate development of the negatives. The respect in which the patent in suit varies from the process Bullis disclosed is in the final step, printing the two negatives on a single positive, where Bullis printed the positives on separate films and united them mechanically.

Craig's patent of 1918 (R. 861), discloses a system of simultaneously recording pictures and sound (R. 866, ll. 123-7) on separate negatives (R. 867, ll. 113-7) and after separate development printing the picture negative on one side of the strip of positive film and the sound record on the other side of the same positive strip, there being emulsions on both sides (R. 867, ll. 117-120). The sound and picture positives were superimposed though on opposite sides of the positive film. For projection Craig used two different kinds of light, one for the pictures, which the sound emulsion did not interfere with, and the other for the sound, which the picture emulsion did not interfere with. His objects were to retain the use of a standard width of positive film for which ex-

isting apparatus was built, and not to reduce the size of the picture, as would be necessary to make room for sound on the same side of the film. The respondent claimed his plan was inoperative. The Eastman Kodak expert said to the contrary (R. 269 *et seq.*). It is reasonably obvious that the complications of Craig's method were such as to be more objectionable than the disadvantages of placing sound and picture sequences on the same side and on different parts of the positive. So far as the photographic process of printing is concerned, he discloses simultaneously recording sound and pictures on separate negatives, separate development, and printing of the separate negatives on a single positive, although on opposite sides. His disclosure also included making two simultaneous sound records with the pictures, taking the sound from different locations, developing each sound record and the picture record separately and then printing the pictures on one side of a single positive strip and the two sound records side by side on the other face of the single positive film (R. 865, ll. 111-113; 866, ll. 110-122; 870, ll. 57-68).

The patent to Greensfelder of 1918 (R. 701), discloses a method of separately photographing a picture on one negative and a sound record on another, developing them while separate and then printing the two negatives side by side on the same side of a double width strip of film (R. 703, fig. 5). Greenfelder's sounds were not the actual sounds accompanying the action, but manufactured after the picture was taken, to illustrate it, and the sound marks on the negative were of a different type than is now used for reproduction of the actual sounds accompanying the scene. Except for the fact that his pictures and sound were

not simultaneously recorded, the photographic process is substantially identical with that of the patent in suit. He says:

> "A developed negative containing the rows of 'sound marks', but on which the spaces for the pictures are blank, is superimposed upon a developed negative properly pieced and joined and having the pictures photographed thereon but having spaces for the 'sound marks' left blank, and a print is made from this combined negative which will give a positive containing the pictures 4 and the corresponding rows of 'sound marks' 3, shown in Fig. 3" (R. 707, l. 128 to p. 708, l. 8).
>
> "A convenient way to obtain the film 40 is to first photograph a negative of the original film and place it side by side with a finished and pieced negative of the corresponding picture film, then from the two, print a one piece double width positive, such as shown in Fig. 5" (R. 709, l. 128).

It will be noted the patent in suit is not limited to any particular form of sound record.

The British patent to Downing of 1913 (R. 896), discloses the method and apparatus for producing motion pictures accompanied on the screen by a projection of a printed record of the words being used by the actors. His method was to make one negative of the pictures and simultaneously a phonograph record of the words used by the actors. From this a typewritten record of the words was then made and photographed on to a second negative film strip. The two separate negatives, after development, were then printed side by side on the same side of a single positive film (R. 899, ll. 29-30, 41). The words accom-

panying the action were thereby reproduced to the eye on the screen instead of to the ear by a loud speaker.

The situation respecting the prior art was well summed up by the trial court, as follows:

> "It was everyday practice in the motion picture industry, as early as 1908, to print on standard positive film composite pictures from separately developed negatives" (R. 1199).
>
> "The patent in suit is entitled 'Process for Producing Combined Sound and Picture Films'. It is merely an example of composite or combination printing, a term applied to the making on a single piece of photographic sensitive material prints or impressions from two or more separate negatives, which is very old.
>
> "No photographic operation is involved which was not employed in the old art of composite printing which involved both simultaneous and consecutive exposure of separate negatives, separate development of those negatives in an appropriate manner and with different lengths of development, and both simultaneous and consecutive printing of the separate negatives on a single positive film; and was used in both black and white and color photography, and in both still and motion pictures, long before any date important here" (R. 1195, 1196).
>
> "The composite printing process of the patent in suit for sound pictures was adopted as the need arose * * *" (R. 1196).

To avoid encumbering the brief at this point, a history of the patent in suit and its progress in the Patent Office is set forth in the appendix hereof at page 43. Some additional facts respecting the commercial use of the process are stated in connection with the argument at pages 34-41 hereof.

SPECIFICATION OF ERRORS

The Circuit Court of Appeals erred:

(1) In reversing the decree of the District Court and in holding the patent valid;

(2) In failing to hold the patent invalid because of anticipation and because of want of invention;

(3) In adopting a lower standard of invention than that laid down in the decisions of this Court, and in overlooking the rule that the application of old processes to new but analogous subject-matter is not invention;

(4) In holding on the facts of this case that commercial use sustains the claim of invention;

(5) In failing to hold claims 8 and 9 of the patent in suit invalid as being for a broader and different alleged invention than that of the application as filed.

(6) In failing to hold that the disclaimer relating to claims 6 and 7 is invalid and that the claims to which it relates are void.

SUMMARY OF ARGUMENT

I. The decisions of this Court make it clear that the patent in suit discloses nothing amounting to invention. The claims are for a photographic process of three steps, (a) photographing pictures and sound simultaneously on separate films (or if one negative is used, splitting it before development); (b) developing them separately in a manner appropriate for each; (c) uniting the two records by printing them side by side on a single positive film.

The purpose of separate development is improved quality of reproduction. The object of union on a single positive is convenience in use.

The patentees did not claim to be the first to point out the advantages or results of any step in the process.

They contributed nothing to the methods of recording sound on film, nor to the methods of development, nor to the methods or apparatus for printing two negatives on one positive film.

Photographing sound and pictures side by side on one film, developing them together and printing them on one positive, were admittedly old. Photographing sound and pictures on separate films, developing separately and printing on separate positive films, were admittedly old.

Recording pictures and sound on separate negatives with separate development and printing the two records side by side on a single positive film, where the photographic sound record was of a different type than has been commercially used, were admittedly old.

Composite printing of two motion pictures, *i. e.*, photographing two series of pictures on separate films, developing separately and printing the two side by side on a single positive film, was old.

The patentees' claim to invention narrows to the contention that they were the first, when dealing with sound pictures, to give separate developments to sound and picture negatives and still finish up with the old single positive film for exhibition purposes.

Under the decisions of this Court the patentees disclosed no exercise of the inventive faculty nor anything more than ordinary skill in the use of known photographic processes. The advantages of these steps were known and old, and the processes were separately and collectively old.

Furthermore, it being undisputed that similar steps (with identical advantages and effects) in treatment of two series of motion pictures were old, the application of the same process to photographs of pictures and sound, was the application of an old process to an analogous subject-matter, and under established legal rules was not invention. The process itself possessed no novelty. Indeed, there was really no difference in subject-matter, as the sound record is itself a photograph.

II. The Court of Appeals erred in holding that an application by an employee of the company defending the suit, for a patent on a like process, estopped the petitioner to question validity of the patent. This point was settled to the contrary by this Court in *Haughey* v. *Lee*, 151 U. S. 282, which the court below overlooked. This error may have contributed to the result reached by the court below.

III. Another error of the court below contributed to its decision. One of the patentees came to this country in December, 1926 and in 1927 made demonstrations of their apparatus, which representatives of Western Electric observed. In 1928 Western Electric manufactured sound on film apparatus. The respondent asserted and the Circuit Court of Appeals evidently believed, that the reason Western Electric did not earlier commercialize sound on film was its ignorance of this process and inability to solve the problem of uniting two separately developed negatives on a single positive by printing, and that the solution was revealed to them by the patentees in 1927. This is refuted in three ways:

First. The assertion that difficulty with these simple photographic steps caused the

Company's delay in commercializing sound on film is, in view of the prior art and practices, unbelievable on its face.

Second. The respondent refuted its own contention by proving that in April 1924, an employee of Western Electric made a patent application disclosing complete knowledge of this process. This was three years before the patentee came to the United States, and two years before Western Electric first supplied disc recording apparatus to a motion picture producer.

Third. There is abundant other evidence that Western Electric was prepared as early as 1926 to furnish equipment for sound on film, that there was no real demand for it until after the motion picture industry was convinced by Warner Brothers' 1927 demonstration that the public wanted sound with pictures, that in 1928 the other large producers chose the film system because of convenience in use, notwithstanding the expensive changes in recording and projecting apparatus, required for film, and that Western Electric supplied film apparatus as soon as demand for it arose.

In this connection, contrary to the decisions of this Court, the court below relied on commercial success to establish invention (not utility), when the prior art failed to leave the question of invention in doubt.

The method used by the court below in testing the patent in suit by reference to the prior art, was faulty in that it was limited to a search for some prior patent which, taken alone, read literally in every particular on the patent in suit, thus disregarding the question of invention over the prior art.

IV. Claims 8 and 9, omitting separate development, and filed nine years after the application, are invalid for the additional reason that they are for a broader alleged invention than that disclosed in the application, and clearly anticipated.

ARGUMENT

I.

Applying the principles laid down in the decisions of this Court to the facts of this case, it is obvious that the patent in suit discloses nothing amounting to invention.

This Court has repeatedly held that to be valid a patent must disclose a substantial exercise of the inventive faculty, and that the mere application to known elements of ordinary mechanical skill in the course of the natural development and expansion of the art is not invention. *Hollister* v. *Benedict Mfg. Co.*, 113 U. S. 59, 72, 73; *Aron* v. *Manhattan Ry. Co.*, 132 U. S. 84, 90; *Grinnell Washing Machine Co.* v. *Johnson Co.*, 247 U. S. 426, 434; *Concrete Appliances Co.* v. *Gomery*, 269 U. S. 177, 180, 185; *Powers-Kennedy Contracting Corp.* v. *Concrete Mixing & Conveying Co.*, 282 U. S. 175, 185; *Saranac Machine Corp.* v. *Wirebounds Patent Co.*, 282 U. S. 704, 713; *DeForest Radio Co.* v. *General Electric Co.*, 283 U. S. 664, 685.

No patent can be valid if the thing disclosed involves nothing more than intelligent acceptance of known expedients for accomplishing the desired thing. This Court has repeatedly held that there must be a real exercise of inventive faculties. The latest decision on this point is that of *DeForest Radio Co.*

v. *General Electric Co.*, 283 U. S. 664, where the Court held the Langmuir patent for the high vacuum tube invalid for want of patentable invention, because the principle of relationship of the degree of vacuum in the tube to ionization therein was already known. In that case and in many of the cases above cited this Court refused to dignify as invention advances in the art produced by mechanical ingenuity and technical skill of a very much higher order than these patentees applied.

The patent in suit deals merely with a photographic process (a) the simultaneous recording of pictures and sound on separate negatives; (b) the separate development appropriate to each; and (c) combining the two records on a single positive film for projection, by printing the two negatives either together or successively side by side on the same positive film.

Everything down to the point of uniting the two negatives in the printing process was disclosed by Bullis in his application in 1915. The advantages of separate development of the two negatives were known. How superficial was the patentees' knowledge of this subject is revealed in their specification, which mentions only over and under-exposure in the picture as a reason for separate treatment in development. With modern methods of measuring the intensity of light during the operation of the camera, over and under-exposure is a minor consideration in motion picture photography (R. 148-9). Bullis previously referred to a better reason for separate treatment resulting from the use of different emulsions for pictures and sound, which is a common practice today and used by petitioner, to obtain a sharper definition in the sound record (R. 145-6; 155-6).

Vogt and his associates did not claim to have been the first to point out the advantages of separate development. They made no contribution to the photographic art as to the manner of development or separate treatment.

In respect of the last step, the printing of the two negatives on a single positive, they did not claim to be the first to point out the advantages of a single film containing both sound and picture sequences. Such films were old and the advantage, convenience in use, was obvious.

The patentees did not claim to have pointed out any method, apparatus or means of printing the two negatives on a single positive, either together or successively. They left that to the known art, assuming that the method was well known and machines were available.

Their claim now is that they were the first to suggest that after sound and pictures were separately recorded and separately developed, the known advantages of a single film for projection should be obtained, by using the composite printing process and photographically printing the two negatives on a single positive (R. 80-83).

Given separate simultaneous recording of sound and pictures on separate negatives, and separate development, which were old, and given also the known mechanical advantage of having the two positives on a single strip of film, and given also the old and well-known photographic printing process common to both still and motion pictures of printing two negatives side by side on a single positive, what exercise of the inventive faculty is there in the suggestion that the two separately developed sound and picture films be combined on a single positive by this well-known printing process?

Any photographer would say "print both negatives on a single positive film".

The respondent contends that where pictures and sound had been dealt with in the prior art, there had been either a single negative containing the two records, developed together and printed on the same positive film strip, or two negatives on separate films, kept separate and separately printed on two positive film strips, and that, starting with two negatives and ending up with one positive film strip, was new. Even if this were true, it would not be invention in the light of known and disclosed methods and processes.

There is another aspect of the question of invention. Whatever may have been the prior disclosures respecting sound and pictures, it is indisputably established that the prior art disclosed recording of two sets of motion pictures either of different or identical objects on separate negative films, separately developed and then for convenience in projection printed simultaneously or successively side by side on a single strip of positive. Illustrations of this are found in the Rossi patent (R. 882); the Messter patent (R. 873) which included simultaneous recording; and the Biograph picture "Music Master" (R. 844). Every step of the process in suit is there disclosed. Although Rossi, Messter, Greensfelder and Downing do not state that the two negatives are separately developed, it is a necessary inference from the fact that they were separate during development, and because of the rack and tank method then in use (R. 149). The respondent contends that in the instances cited two picture records were being dealt with, while here a picture and a sound record are being dealt with, and seeks to distinguish the cases on that ground.

Again, in the Downing prior patent (R. 896) the motion pictures were photographed on one film strip

and simultaneously a typewritten record of the actors' words was made, and that typewritten record was then photographed on to a second negative film strip and the two negative films, after development, were printed on one side of a single positive film, so that when projected the words used by the actors were shown on the screen, with the pictures they related to. Here again the respondent says we are dealing with a different subject-matter.

In all those cases the process is identical with that in the patent in suit, the reasons for its use are alike and the subject matter is the same. The respondent overlooks the fact that the sound record is itself a photograph and is so described in the patent. True it is not for visible reproduction, but it is none the less a photograph. With the light valve system we have described (pp. 3-4) the sound record is a photograph of the variations of light passing through a varying aperture between two metal threads. As only photographic processes are involved, when dealing with photographic sound and picture records, the subject matter is not intrinsically different from two pictures. But even if it may properly be said they are different subject matters, they are closely analogous.

This Court has said that to sustain a process patent *the process itself* must possess novelty, and that the application of an old process to a different and analogous subject, is not invention.

In *Brown* v. *Piper*, 91 U. S. 37, the patent in suit was for a process of preserving fish. Referring to a prior patent, this Court said (p. 41):

> "Here" (in the prior patent) "was the application of the requisite degree of cold exactly in the manner called for in the specification of the appellee.

> This is hardly denied; but it is insisted that the process was never applied by the witness to the preservation of fish and meats.
>
> The answer is, that this was simply the application by the patentee of an old process to a new subject, without any exercise of the inventive faculty, and without the development of any idea which can be deemed new or original in the sense of the patent law. The thing was within the circle of what was well known before, and belonged to the public. No one could lawfully appropriate it to himself, and exclude others from using it in any usual way for any purpose to which it may be desired to apply it."

And, in *Penn. Railroad* v. *Locomotive Truck Co.*, 110 U. S. 490, where the patent in suit was for trucks for railway cars, this Court said (p. 494):

> "It is settled by many decisions of this court, which it is unnecessary to quote from or refer to in detail, that the application of an old process or machine to a similar or analogous subject, with no change in the manner of application, and no result substantially distinct in its nature, will not sustain a patent, even if the new form of result has not before been contemplated."

The decision in *Dreyfus* v. *Searle,* 124 U. S. 60, 63, is to the same effect. And, in *Concrete Appliances Co.* v. *Gomery,* 269 U. S. 177, 184, 185, this Court recently held:

> "Failure to make use of these obviously applicable *methods* and appliances in combination, suitable to the particular work in hand, in dealing with a new plastic material capable of

> similar treatment, would, we think, have evidenced a want of ordinary mechanical skill and of familiarity with construction problems and *methods.*" (Italics ours.)

The limitation of the patent in suit to simultaneous recording is unimportant.*

The Circuit Court of Appeals committed a fundamental error in giving controlling weight to the evidence showing the wide-spread use of the patented process as establishing *invention.* Only when invention is in doubt may commercial use be thrown in the scale to support it. *DeForest Radio Co.* v. *General Electric Co.*, 283 U. S. 664, 685.

Another error in the method followed by the Court of Appeals was to limit itself to a precise comparison

---

* Our references to prior patents and practices disclose some instances where photographing two pictures, or sound and pictures, was *simultaneous*, and some where it was not. We think this is of little consequence. The limitation of the claims of the patent in suit to *simultaneous* recording of sound and pictures has no significance on the question of invention. If invention would not have been present if the claims had applied both to negatives made simultaneously and those which were not, invention was not produced by excluding the latter. All advantages of separate development of the two negatives, and of union on a single positive, and all reasons for both steps are present where recording is not simultaneous, and the ways in which those things are done is the same in either case. The original application made no mention of simultaneous recording. The later insertion of that qualifying adjective may have limited the scope of the claims, but added nothing to the argument for invention, and therefore did not make irrelevant the citation of prior patents where photographing two pictures, or sound and pictures, was not simultaneous.

of the patent in suit with prior patents, and finding that they did not literally read alike in every particular, to reject the prior patents as failing to anticipate. It also labeled the prior patents as "paper patents". The value of the prior patents consists mainly in their published disclosures of the photographic steps covered by the patent in suit. Many of the prior patents were apparatus, not process patents, but they nevertheless disclosed or assumed, as part of the knowledge in the art, the steps in photographing, developing and printing with which this case is concerned. In any event, a prior patent or publication needs not to have been reduced to practice, or to be more than a paper proposition, in order to negative patentability in a later patent. It is sufficient if the prior patent embody the elements and disclose the principle of operation of the patent in suit. Walker on Patents, 6th Ed., pages 120-1; see, also, *Pickering* v. *McCullough,* 104 U. S. 310, 319; *Dashiell* v. *Grosvenor,* 162 U. S. 425, 432.

The Court of Appeals said in its opinion (71 Fed. (2d) 153, 154):

> "The problem sought to be solved by the patent was bringing together on one positive film the picture record, which requires one type of development, and a sound record, which requires a different type of development."

How could anyone familiar with the art of composite printing in still and motion picture photography have regarded that as a problem? The patent in suit does not describe the composite printing as a problem. The only difficulties it speaks of are those resulting from differences in exposure of sound and picture negatives, and for those difficulties the solu-

tion of separately taking and separately developing the sound and picture negatives had been fully and completely stated by Bullis, and it had long been practiced in composite printing.

The process of photographing two pictures on separate negatives, separately developing them and then combining them on a single positive by the composite printing process, was first used with still pictures.

When motion pictures arrived, and it was desired to have two sets of motion pictures for projection together, the same process was used and for the same reasons.

As soon as recording sound on film was developed and it was desired to commercialize sound on film with pictures, the same old process was applied, and again for the same reasons. The same advantages, none of which the patentees claimed to have discovered, namely, separate development to obtain good quality in the negatives, and printing on a single positive for convenience in use, were the objectives in all three classes of photographs.

Neither the process nor the reasons for its use were revealed to the industry by these patentees. It is easy to understand why the trial court said:

> "The patentees made no contribution to the art of photography" (R. 1196).

The motion picture industry should not be compelled to pay tribute to this so-called invention, every conception of which was old and the steps of which were obvious to one with any substantial knowledge of the subject.

II.

The Circuit Court of Appeals was wrong in holding that the Wente application created an estoppel or presumption against the petitioner.

As the claim to invention in this patent is so flimsy, one naturally seeks for an explanation of the decision of the Circuit Court of Appeals. Its error in connection with the Wente application for a patent may have been a contributing cause.

Dr. Wente was a research engineer employed by the Western Electric, whose subsidiary is defending the suit for the petitioner (R. 27). In April, 1924, he filed an application for a patent in the United States Patent Office (R. 605). The gist of Wente's invention was the improvement of the quality of the sound record in the upper frequencies by reducing the grain in the emulsion (R. 641, ll. 31-4), and by speeding up the sound record both in the recording and the printing process. When his application was filed it contained, among others, claims broad enough to include the process of the patent in suit. These claims were properly rejected without any protest from Wente and were thereupon withdrawn. Wente testified that he considered his real invention was in connection with the doubling of the speed of recording on the sound film (R. 371), and that was the only thing in his application he considered original (R. 372); that when he gave his memorandum to the patent department of the company, the patent solicitors broadened the claims so that they included a process of recording the sound and pictures on separate negatives, treating them separately in development, and printing them on a single positive. The Wente appli-

cation was offered in evidence by respondent-plaintiff to establish an estoppel or presumption of novelty against the petitioner. Of this incident the Circuit Court of Appeals said (R. 1228):

> "The Western Electric Company's scientist, Dr. Wente, applied for a patent disclosing and claiming the invention of the patent in suit. The application stated that for correct sound reproduction 'it is important that the development of the positive and negative be so carried out that the transmission of the positive is at every point proportional to the exposure of the negative. This is in general not the best condition for the pictures as under these circumstances they will usually be too harsh. In the system here proposed the picture negative and positive can be developed to give the most pleasing results for pictures, and yet the negative of the sound record can be so developed that when it is printed on the picture positive film the required contrast is obtained in the positive sound record.'
>
> "His claim No. 31 was rejected on the patent of these inventors (British Patent No. 178,442) corresponding to the patent in suit and was cancelled. And after that experience, it is now argued, by the Western Electric Company, which is defending this suit, that there is no validity. That company is hardly in a position to question validity of the patent. *DuBois* v. *Kirk*, 158 U. S. 58; *General Knit Fabric Co.* v. *Steber Machine Co.*, 194 Fed. 99 (C. C. A. 2); *Sugar Apparatus* v. *Yaryan*, 43 Fed. 140, 144."

DuBois v. *Kirk*, 158 U. S. 58, cited by the Circuit Court of Appeals, relates to a case where utility, not invention, was in question. The Court there said that where the infringer not only applied for a patent

covering the device in question but actually used it, the presumptions respecting its *utility* were against him.

In *Haughey* v. *Lee*, 151 U. S. 282, 285, this Court said:

> "There is no merit in the proposition made in the second assignment of error, that defendants are estopped from asserting that there is no patentable novelty in plaintiff's invention, by their conduct in seeking to procure, through one of their employes, a patent for substantially the same invention. Whether or not there is any inconsistency in trying, at one time, to get a patent for a supposed invention, and in afterwards alleging, as against a rival successful in obtaining a patent, that there is no novelty in the invention, it certainly cannot be said to constitute an estoppel. Besides, the defence of want of patentable invention in a patent operates not merely to exonerate the defendant, but to relieve the public from an asserted monopoly, and the court cannot be prevented from so declaring by the fact that the defendant had ineffectually sought to secure the monopoly for himself."

Furthermore, the petitioner, Paramount Publix Corporation, has a separate interest, and no estoppel or presumption could arise against it, because of the acts of Western Electric employees.

III.

The contention of the respondent, which was accepted by the Circuit Court of Appeals, that the problem of putting two separately developed negatives on a single positive by a printing process was too much for the research laboratories in this country, and that the solution was revealed by these patentees to the Western Electric Company in 1927 and then appropriated by it, is without any support in the record.

Seeking for further explanation for its decision sustaining this patent, we find an inference in the opinion of the Circuit Court of Appeals prejudicial to the petitioner, which is without any basis in fact.

Prior to 1927 Warner Brothers had commercially produced sound on disc with motion pictures, using Western Electric apparatus furnished under a recording license agreement made in 1926 (R. 334). In December, 1926, Engl, one of the patentees, came from Germany, and early in 1927 in the Fox Studios, made some demonstrations of their sound on film apparatus which Western Electric engineers observed. In 1928 Western Electric commenced commercially to produce its sound on film apparatus. From this bare chronology the respondent asserted in the Circuit Court of Appeals that the failure of the Western Electric Company to produce sound on film apparatus prior to 1927 was due to *its inability to solve the photographic problem covered by this patented process;* that the patentees had revealed to it in 1927 the solution of the problem; and that the Western Electric Company promptly appropriated the process

to its own use. In its brief in the court below the respondent said (p. 44):

> "Here, several years after Vogt and his associates had solved the problem in Germany, the Western Electric engineers were completely stalled in their development and research work by the problems, the solutions of which they now assert were obvious and well known years before."

It then asserted (p. 45):

> "So that nothing was lacking for the recording and reproducing of successful sound-on-film except the knowledge of the Tri-Ergon system which became available in this country in late 1926."

Then follow several pages under the caption, "The Tri-Ergon System Fully Disclosed to Western Electric Engineers in 1926 and 1927". After again stating that the Western Electric Company had failed up to 1926 to bring out sound on film, the respondent said (p. 50):

> "There the matter stood in 1926. And there, so far as Western Electric is concerned, it might have stood today. But at the end of that year Dr. Engl brought his equipment to America; demonstrated it to the research engineers; theatres were equipped with sound-on-film reproducing apparatus beginning in June, 1927 (R., p. 324); the defendant, along with the other Western Electric producer-licensees, adopted the process of the patent in suit and now it is the standard practice of the industry."

These assertions made an impression on the Court of Appeals, which said (R. 1225-6):

> "The problem sought to be solved by the patent was bringing together on one positive film the picture record, which requires one type of development, and a sound record which requires a different type of development. Its accomplishment marked an important advance in the art. Makers of talking motion pictures, including the Western Electric Company and its associates, during the period following the application for this patent tried, but until the inventor exhibited this process, accomplished little with the development of sound on film. While all apparatus necessary to practice the present invention was at hand and owned by the Western Electric Company and its affiliates, no one solved the film problem presented by the requirement of different treatment for sound and picture records. The difference in treatment was necessary to avoid distortions of one or the other or both in reproduction. The engineers of the Western Electric Company, in this period, struggling for the solution of the problem of sound on film development, turned to sound on disc. The first successful talking motion picture in this country was produced by sound on disc. The process of the patent in suit was brought to this country from Germany. Western Electric Company's engineers examined and tested it. They thereupon used it, and it superseded sound on disc."

If the court below had made a careful examination of the record, it never would have accepted these conclusions.

That the Western Electric interests were "stalled" in their efforts to produce sound on film because of

their inability to devise the photographic processes described in the patented process, is without any support in the record.

> First. The assertion that the research laboratories of Western Electric, as well as those of the Eastman Company, which were always available (R. 305), were unable to devise a photographic process or steps by which sound and pictures could be separately recorded and developed, and then printed on a single positive, is unbelievable on its face.

The state of the prior art, as disclosed in the record, makes it unbelievable. Knowing all the advantages of separate negatives, separate development and single positives, the suggestion that the concerns defending this suit could not think of a way of producing a single positive with sound and picture records printed on it from two separate negatives, is absurd.

> Second. The facts connected with the Wente application refute the respondent's contention.

At the trial the plaintiff sought to create an estoppel by proving that Wente in 1924 applied for a patent on a process identical with Vogt's (see pp. 29-35, *supra*). Wente was engaged in research on sound on film apparatus, for Western Electric. The respondent-plaintiff itself proved that at least as early as April, 1924, the Western Electric interests knew all about separate recording, separate development and combining the negatives by printing on a single positive film. In 1924 Wente had never heard of these patentees or their application for patent (R. 323).

In its eagerness to establish an estoppel against the petitioner, the respondent thus overreached itself and annihilated its own claim that the final solu-

tion of sound on film depended on this patented photographic process first revealed to the Western Electric by Engl's visit in 1927. It also destroyed its claim that Western Electric furnished disc apparatus rather than film to Warner Bros. in 1926, because Western was then ignorant of the process of the patent in suit.

This item of evidence offered by the respondent is alone enough to refute its contention that this photographic process was revealed to the Western Electric by Engl in 1927, and that the revelation enabled the Western Electric Company promptly to produce sound on film.

> Third. There is abundant other evidence that the manufacture by the Western Electric Company of apparatus for the disc system, instead of film, for the first commercial output of sound pictures was due to other reasons than difficulty with the simple photographic process described in the Vogt patent.

Prior to 1926 motion pictures were silent. There was no demand for sound pictures, nor was there convincing evidence that the public would like them, prior to Warner Brothers exhibition of sound pictures with the disc system beginning in August, 1926. The Western Electric commenced work on sound on film in 1913, and continued it until 1927 and since. The real problems related to methods of recording and reproducing sound. The use of a single positive had no relation to improvement in quality but only convenience in use. Other departments of the Western Electric meanwhile were working on the disc system. Western Electric electrically recorded disc records for phonographs had been developed and were in commercial use (R. 313-4). When the possibility of

sound pictures was first seriously considered, all the methods and apparatus for recording and producing sound by the disc method were developed and ready at hand. The addition of sound on disc to motion pictures involved merely the attachment of a phonographic type of turntable to existing motion picture projectors, with no modification of the projectors or of film printing machines. It involved no change in the size of the picture to make room for the sound record. The sound on film form, on the other hand, involved new recording equipment, new recording technique, newly developed recording apparatus and changes in thousands of projectors in theatres. It was natural, when Warner Brothers were willing to experiment with sound pictures, that the disc system was furnished them (R. 99, 314). In the summer of 1926, public interest in sound pictures was disclosed, and a number of theatres were equipped with the Western Electric disc system to make use of the pictures Warner had made with it. From that time the silent picture industry was forced by public demand to move toward the adoption of sound.

Meanwhile, Western Electric had continued its work on both disc and film systems. Wente had worked on the variable density method of recording sound on film in 1920 (R. 312-3); he devised the Western Electric light valve (R. 313, 319); described on pp. 3-4, *supra*. Others, including Fox Case, had used the glow lamp for recording sound. Wente's research work on light valves had advanced by 1923 to the point where he thought it could be satisfactorily used, but work on it continued. The apparatus development department of the Western Electric had been working on it up to 1927. Drake, of Western Electric, said the light valve apparatus was not in commercial

form until December, 1926 (R. 338). Respondent's testimony was to the effect that the contest between the glow lamp and light valve had continued until late in 1926 (R. 417). The first light valve installation was in 1927 (R. 340). Wente had also been working on improvements in the photoelectric cell, an essential part of the apparatus for reproducing sound from the film record (R. 380). Some other real problems were devising suitable emulsions for sound negatives (R. 145-6, 152); mixing sound taken from two points, and increasing the frequency range of loud speakers (R. 317). The testimony for the respondent was to the effect that the Fox Case film system was better than Engl's demonstration in 1927 (R. 330). The Fox Case Company in 1926 had been developing sound on film by a method of its own, using the single film system throughout (R. 300).

The Western Electric was in a position to put out sound on film in December, 1926, "if there had been a demand for it" (R. 338). In 1927 when Fox Case sound on film pictures were ready for exhibition, Western Electric equipped certain Fox Theatres with apparatus for reproducing the sound. In 1928 when the other large producers of motion pictures, decided to adopt the film system, Western Electric supplied the apparatus.

That the Western Electric had not commercialized all its sound on film apparatus prior to 1926 may be true, but it was due to wholly different causes than inability to find a way to combine two separately developed sound and picture negatives by a printing process on a single positive.

The contention of the respondent, accepted by the Circuit Court of Appeals, that the conception of combining the two separately developed negatives on a single positive by a photographic printing process,

was the stumbling block which delayed Western Electric sound on film apparatus, is utterly unsupported by the evidence.

IV.

Claims 8 and 9, which omit separate development, in addition to being invalid for the foregoing reasons, are invalid as being for a broader alleged invention than that disclosed in the application as filed, and clearly anticipated.

The Circuit Court of Appeals disregarded this point. Claim 5 was taken as typical of all the claims.

Claims 8 and 9 omit, in terms, the separate development of the two negatives in a manner appropriate for each. The original application, filed in March, 1922 (R. 475), contained no suggestion that the separate development step might be omitted. Indeed, separate development was the purpose of the process. Nine years later, in July, 1931, the specification was broadened (R. 540, 542), by inserting the matter now appearing in lines 83 to 89 of the patent (R. 468) and inserting new claims including 8 and 9. Considerably before this the process had been used commercially by petitioner and other motion picture producers (R. 196).

The alleged invention, emasculated by omitting separate development in claims 8 and 9 was squarely anticipated by Greensfelder and the composite printing process. Furthermore the courts regard with disfavor any attempts to enlarge the scope of an application once filed. *Railway Co.* v. *Sayles,* 97 U. S. 554; *DeForest Radio Co.* v. *General Electric Co.,* 283 U. S. 664, 675; *Powers-Kennedy Co.* v. *Concrete Co.,* 282 U. S. 175, 178.

Assigned Error No. 6.

This deals with the effect of a disclaimer filed after this suit was begun (R. 472). As it relates only to claims 6 and 7, and a similar question will be argued in Nos. 255-6, we leave the point to abide the conclusion in the other case.

CONCLUSION

Facts that are beyond dispute refute the patentees' claim of novelty and invention. The decisions of this Court, while always protecting the rights of patentees where any real exercise of inventive faculty is disclosed, have been careful to prevent the imposition of a patent monopoly on the public where it is absent. All these patentees did was to scramble together simple and well-known photographic processes, and dress the aggregation up as the invention of a process. Clearly, they made no contribution entitling them to exact a tribute from an entire industry the success of which with sound on film pictures has been due to research and developments in phases of the subject, with which this patent has nothing to do.

The judgment should be reversed.

Respectfully submitted,

WILLIAM D. MITCHELL,
CHARLES NEAVE,
Counsel for Petitioner.

THOMAS G. HAIGHT,
Of Counsel.

APPENDIX.

HISTORY OF PATENT NO. 1,825,598, ISSUED SEPTEMBER 29, 1931, ON THE APPLICATION, FILED MARCH 29, 1922, OF VOGT, MASSOLLE AND ENGL.

The history of the long prosecution of the application for this patent in the Patent Office is reviewed by the trial court (R. 1188-1195). It shows how the question of patentability of the claims over the prior art became obscured by an interference proceeding invited by the applicants, and invention taken for granted at the end when the claims in suit were submitted more than nine years after the filing date.

The original application was filed March 29, 1922 (R. 475), with four claims (R. 480), not unlike the claims in suit. These were erased November 24, 1922, and one claim substituted (R. 484). This claim was for an "improved process for the production of combined sound and picture records, in which the sound record and the picture record are produced simultaneously on a single film which is then divided and the two parts developed separately, and afterwards reunited and used to print the single positive record".

On April 19, 1923 (R. 486) this claim was rejected "as not involving invention over Bullis of record". On October 11, 1923 (R. 487), the applicant then substituted two new claims. On October 15, 1923, these claims were rejected (R. 489).

Nothing further was done for nearly a year, when new solicitors were employed (R. 490) and the old claims were cancelled and two new claims substituted on September 29, 1924 (R. 491). These were rejected January 26, 1925 (R. 498), the Examiner citing the Greensfelder and the British Massolle patent.

On April 2, 1925, the two rejected claims were modified and two, numbered 3 and 4, were added (R. 499). *The two additional claims, 3 and 4, were copied from DeForest patent No. 1,489,314,* April 8, 1924 (R. 528). In the memorandum accompanying these additional claims the applicants referred to the DeForest patent and called attention to the fact that they had copied claims 3 and 4 from it, and said, "An interference with the said patent at an early date is requested" (R. 501). On April 6, 1925 (R. 502), claims 1 and 2 were rejected by the Examiner "on Craig 1,260,337, in view of Greensfelder, 1,254,684, both of record. It is shown to be old in Craig to take separate synchronous sound and picture records simultaneously, and then reproduce these two records on a single record strip. Applicant desires to reprint both records on one side only, but this is the teaching of Greensfelder, note page 3, line 128, to page 4, line 8."

At the same time the Examiner rejected claims 3 and 4 copied from DeForest "as not based on the disclosure of applicant" (R. 502).

On April 17, 1925 (R. 504), the applicants re-wrote claims 1 and 2, and asked reconsideration of claims 3 and 4.

On April 27, 1925 (R. 513), the Examiner again rejected claim 1 on Craig and Greensfelder. He rejected claims 3 and 4 again as having no basis in the applicant's disclosure. He said, "Claim 2 is allowed as at present advised."

The applicant, on May 23, 1925, took an appeal to the Examiners in Chief (R. 514). It will be noted that when the case came up to the Examiners in Chief on appeal, all claims except one (then numbered Claim 2) had been rejected by the Examiner, and that one was limited to the making of sound and action exposures on a single negative which was after-

wards split apart for separate development, a claim which would not be infringed by the commercial process of the petitioner.

The Examiners in Chief held that the applicant had a right under his original disclosure to make Claims 3 and 4, copied from DeForest, and declared an interference with DeForest. It is a settled rule in the Patent Office that claims copied from another patent are conclusively presumed to be patentable until after priority has been decided. On this appeal, therefore, the Examiners in Chief had no question of novelty respecting Claims 3 and 4, and they must have been influenced by that fact in allowing Claim 1, which was a narrower claim than had been previously allowed to DeForest. Even then they said:

> "While the disclosure in these patents may tend toward a possibility of doubt as to invention being involved in the process defined by claim 1, the grant of the patent to DeForest and the lack of clear anticipation in either of the references or in their combination as to the addition or substitution of features in one not shown in the other and involving the question of invention vs. mechanical skill, we are of the opinion that claim 1 should be allowed in the absence of more pertinent and anticipatory art and appellants allowed to be placed in interference with DeForest to determine the question of priority" (R. 531).

The two references referred to were Craig and Greensfelder. Bullis seems to have been forgotten.

After the rejection of April 19, 1923 (R. 486), Bullis was never mentioned again in the proceedings. The Examiners evidently had before them none of the other patents referred to now, or any other refer-

ences or disclosure as to prior practices respecting composite printing.

After the decision of the Examiners in Chief in 1925, declaring an interference with DeForest, the case went into an interference proceeding, lasting five years, which reached the Court of Appeals of the District of Columbia, where DeForest finally conceded priority. The interference proceeding ended in May, 1931. Thereupon, on July 15, 1931 (R. 538), the applicants amended their specifications, claims 1 and 2, and inserted new claims, 5 to 11, inclusive, all of which were promptly allowed *the next day* (R. 547).

After the interference proceeding, it was the duty of the Examiner to re-examine the question of patentability, not only as to the newly added claims, but as to those which had been involved in interference. It was obvious that nothing of this kind was done. The circumstances under which the interference was declared were such as to put the question of patentability over the prior art in almost total eclipse, and the question was never revived. Rewriting the claims and adding new ones in July, 1931, gave the applicant the opportunity to draw them nicely to avoid literal identity with prior patents and take advantage of the commercial practice which in the meantime had grown up as a result of the advent of commercial talking motion pictures.

DRAWING TAKEN FROM RIES PATENT (R. 592) SHOWING POSITIVE FILM WITH PICTURES AND SOUND RECORD SIDE BY SIDE

Fig. 4.

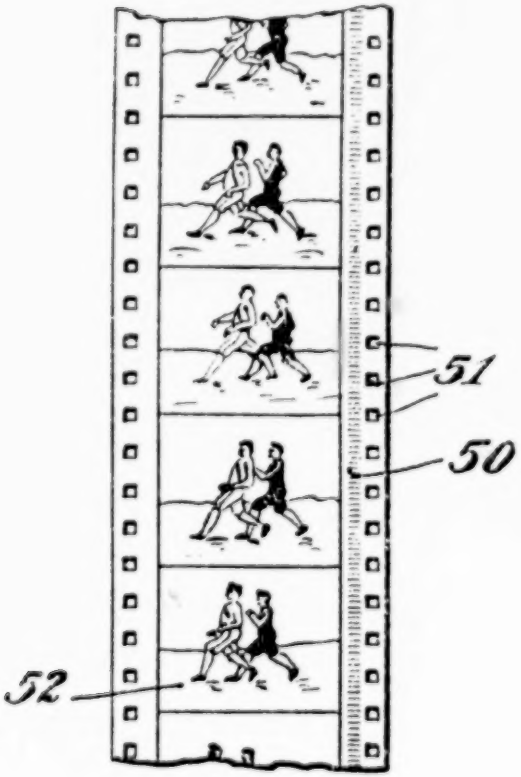

CHART SHOWING SUCCESSIVE PRINTING OF PICTURE AND SOUND NEGATIVES ON SINGLE POSITIVE FILM

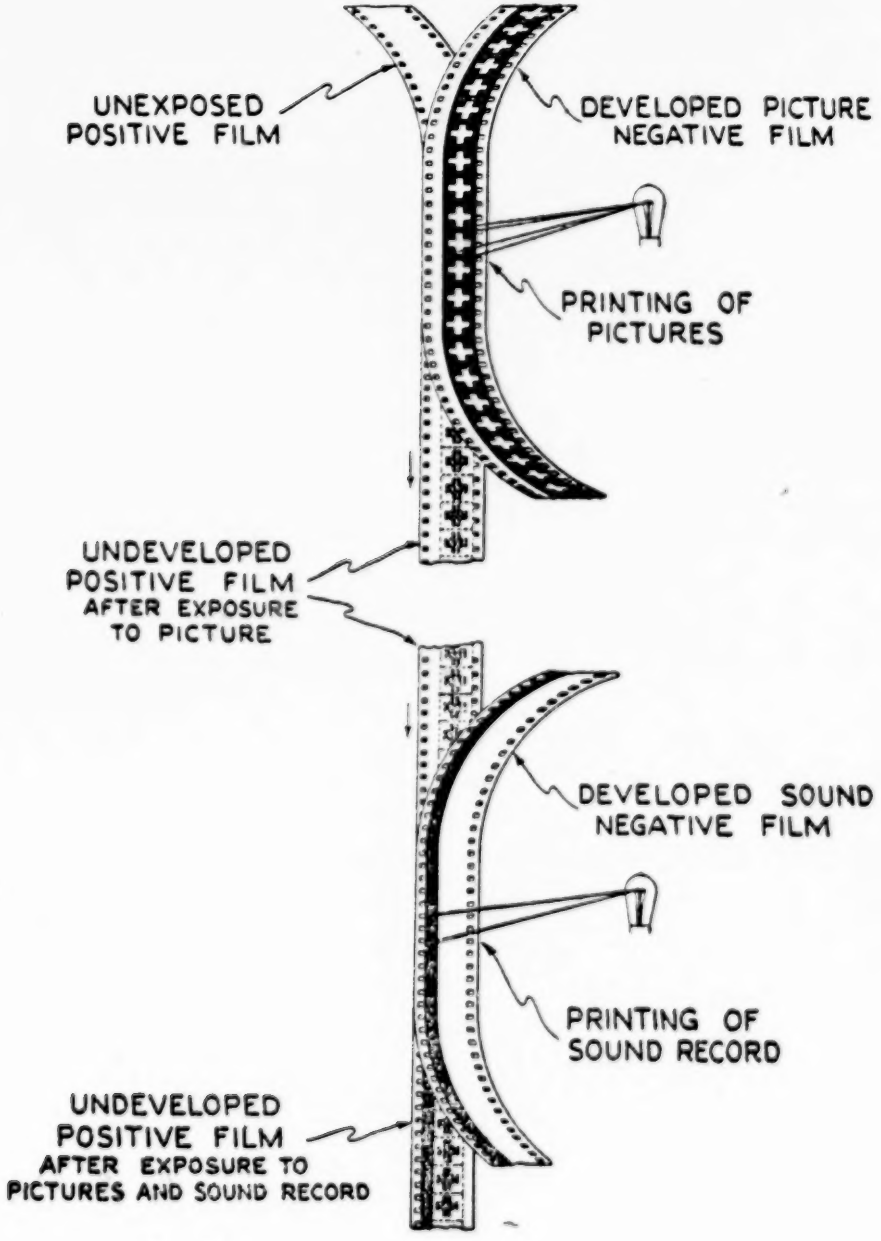

Petitioner's Exhibits A and C Illustrating the Process Used by the Biograph Company

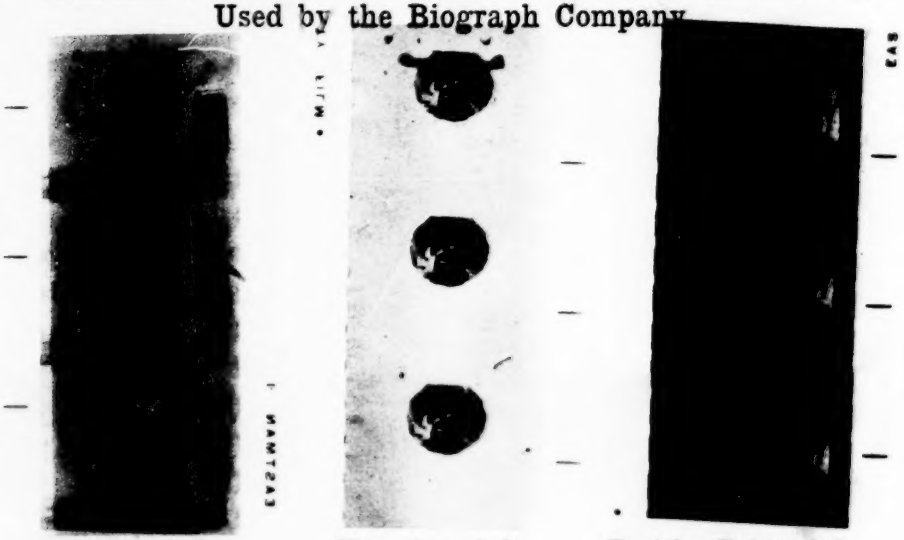

Negative of the "Master"

Negative of the "Master's Dream"

Positive Print of the Two Negatives

Plaintiff's Exhibit 12-A Illustrating the Patented Process and Also Petitioner's Process

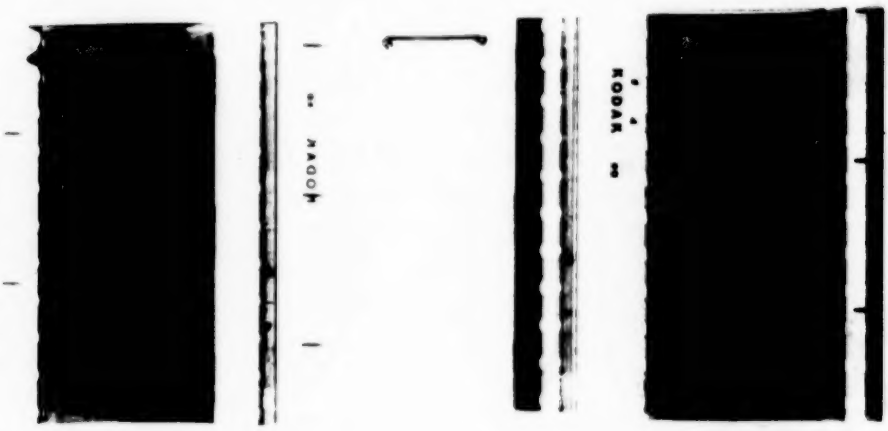

Negative of the Action

Negative of the Sound

Positive Print of the Two Negatives

7

FILE COPY

FILED
SEP 10 1934
CHARLES ELMORE CROPLEY
CLERK

IN THE

Supreme Court of the United States

OCTOBER TERM, 1934.

No. 254.

PARAMOUNT PUBLIX CORPORATION,
Petitioner,

vs.

AMERICAN TRI-ERGON CORPORATION,
Respondent.

ON PETITION FOR A WRIT OF CERTIORARI TO THE CIRCUIT COURT OF APPEALS FOR THE SECOND CIRCUIT.

BRIEF FOR RESPONDENT IN OPPOSITION.

THOMAS D. THACHER,
THEODORE S. KENYON,
S. MORTIMER WARD, JR.,
Counsel for Respondent.

GALLO & ACKERMAN, Inc., 142 Liberty Street, Telephones—Rector 2-5856-7

INDEX.

	PAGE
Opinions Below	1
Jurisdiction	1
Question Presented	2
Summary and Short Statement of Matters Involved	2
Brief Comment on the Grounds Relied Upon by the Petitioner in Seeking the Writ	5
1st Ground	5
2nd Ground	5
3rd Ground	7
4th Ground	9
5th Ground	11
6th Ground	13
7th Ground	13
Conclusion	15

TABLE OF CASES.

PAGES

Abercrombie & Fitch Co. v. Baldwin, 245 U. S. 198 10
Brown v. Piper, 91 U. S. 37 ..... 7, 8
Carnegie Steel Co. v. Cambria Iron Works, 185 U. S. 403 11
Concrete Appliances Co. v. Gomery, 269 U. S. 177 ..... 6, 8
DeForest Radio Co. v. General Electric Co., 283 U. S. 664 ..... 5, 6
Dreyfus v. Searle, 124 U. S. 60 ..... 7, 8
Fireball Gas Tank & Illuminating Co. v. Commercial Acetylene Co., et al., 239 U. S. 156 ..... 13, 14
Fruehauf Trailer Co. v. Highway Trailer Co., 67 Fed. (2d) 558 ..... 11, 12
Hailes v. Albany Stove Co., 123 U. S. 582 12
Haughey v. Lee, 151 U. S. 282 13
Hobbs v. Beach, 180 U. S. 383 10
Hurlbut v. Schillinger, 130 U. S. 456 11
Leeds & Catlin v. Victor Talking Machine Co., 213 U. S. 301 ..... 13, 14
Minerals Separation v. Butte & Superior, 250 U. S. 336 11
Pattee Plow Co. v. Kingman, 129 U. S. 294 ..... 9, 10
Penn. Railroad v. Locomotive Truck Co., 110 U. S. 490 ..... 7, 8
Radio Corp. of America, et al., v. Radio Engineering Laboratories, Inc. (No. 619—October Term, 1933, decided in this Court May 21, 1934) 5
Railway Co. v. Sayles, 97 U. S. 554 ..... 9, 10
Seeman v. Sellers, 123 U. S. 276 14
Straus v. Crane, 235 Fed. 126 11
Thomson Co. v. Ford Motor Co., 265 U. S. 445 5
Westinghouse Elec. & Mfg. Co. v. DeForest Radio Tel. & Tel. Co., 278 U. S. 562 5

IN THE

Supreme Court of the United States

OCTOBER TERM, 1934.

No. 254.

PARAMOUNT PUBLIX CORPORATION,

Petitioner,

vs.

AMERICAN TRI-ERGON CORPORATION,

Respondent.

BRIEF FOR RESPONDENT IN OPPOSITION.

OPINIONS BELOW.

The opinion of the District Court, appearing in Volume III of the Record, at page 1173, is reported in 4 Fed. Supp. 462. The opinion of the Circuit Court of Appeals, appearing in Volume III of the Record, at page 1225, is reported in 71 Fed. (2d) 153. The Petitioner has reprinted both opinions in a separate booklet for the convenience of the Court.

JURISDICTION.

The jurisdiction of this Court is invoked under §240(a) of the Judicial Code as amended by the Act of February 13, 1925 (43 Stat. 938; 28 U. S. C. 347).

QUESTION PRESENTED.

This is an ordinary patent suit involving no unusual features, no conflict of decision between Circuit Courts of Appeals, no new or unusual questions of law. Infringement is not contested here.

The sole question presented is whether the patent is valid. The petitioner contends that the patent is invalid for want of invention, for improper disclaimer, for unlawful expansion of claims, and for forfeiture under R. S., §4887, by reason of an earlier French patent issued to the same inventors.

Respondent disputes all of these contentions. Each of them was argued before the Circuit Court of Appeals and resolved in favor of the respondent.

SUMMARY AND SHORT STATEMENT OF THE MATTERS INVOLVED.

The patent in suit, No. 1,825,598 (Vol. II, p. 467) was granted to the respondent on September 29, 1931, on an application of Vogt, Massolle and Engl, filed March 29, 1922 (Vol. II, p. 475). It relates to a "Process for producing combined sound and picture films". On November 19, 1931, the Bill of Complaint (Vol. I, p. 1) was filed against the petitioner, a producer of talking motion pictures. A disclaimer was filed before trial (Vol. II, p. 472). The suit was defended by Electrical Research Products, Inc., a wholly owned subsidiary of the Western Electric Company (Vol. I, p. 460).

The claims in suit were held invalid by the District Court (Vol. III, p. 1209). In the Circuit Court of Appeals, the decree was reversed and the patent held valid and infringed. Swan, J., dissented without opinion. Petition for rehearing was denied July 2, 1934 (Vol. III, p. 1273).

The court below found, among other things, that the problem solved by the patent in suit was the bringing

together, on one positive film, of the picture record, which requires one type of development, and the sound record, which requires a different type of development (Vol. III, p. 1225, Opinions, p. 30); that its accomplishment marked an important advance in the art (Vol. III, p. 1226, Opinions, p. 30); that by the invention in suit a product in the form of a single positive film is produced bearing the sound and picture records side by side, in fixed synchronism, each being as perfect as the arts of photography and telephony can make it and neither being compromised in quality by reason of the presence of the other, as had been the case in the prior suggestions of the art for single film, and that this new positive film is different in function and result from positives produced by the single film system (Vol. III, p. 1227, Opinions, pp. 31-32). The court found that the prior patents in the sound-on-film art, issued over a period of sixteen years before the filing of the application for the patent in suit, were but paper patents and did not anticipate (Vol. III, p. 1229, Opinions, p. 34) and that they related in general to one or other of two proposals:

> First, the single film system wherein both the picture and the sound record were to be made on the same negative, subjected to the same developing treatment and printed from that single negative onto a single positive, the product being of inferior quality because no single developing treatment is appropriate to both sound and pictures, and
>
> Second, the double film system wherein the sound record and picture record were to be made on separate negatives, separately developed and separately printed on separate positives, the double film product being necessarily cumbersome and impracticable because it did not permit the use of a single or unitary positive print (Vol. III, pp. 1226-1227).

In addition the court found that, during the period between the filing of the application (March 29, 1922, Vol. II, p. 425), and its exhibition by Engl, one of the inventors, to the Western Electric Company engineers in December, 1926 and early 1927 (Vol. I, pp. 109, 328, 415-416), the engineers of that company and others were struggling with the problem of sound-on-film; that failing to solve the *film* problem presented by the requirement of different treatment in the development of sound and picture negatives, they turned to sound-on-disc, which became successful; and that after the process of the patent in suit had been disclosed to and tested by the Western Electric Company's engineers, they used it and it superseded sound-on-disc (Vol. III, p. 1226, Opinions, pp. 30, 31). The Court found on the facts of record that no practical sound film had been made prior to that produced by the process of the patent in suit (Vol. III, p. 1226, Opinions, p. 31) and that the inventors achieved a new result by combining steps of the double film system and steps of the single film system, which result has been effective and enduring and has become the standard practice in the industry (Vol. III, p. 1227, Opinions, p. 32).

As to the Bullis, Craig and Greensfelder patents stressed by petitioner, the court below found that they had all been cited and overcome in the Patent Office; that Craig is wholly inoperative and that Greensfelder has no sound negative at all and does not deal with the talking picture problem, but only with scoring arbitrary marks on a previously taken picture; that it does not present the problems solved by the patentees and is directed to a method to escape from the problems of photographically recording natural sounds accompanying the pictures (Vol. III, pp. 1229-1230, Opinions, pp. 34 and 35).

The petitioner argues that the findings of the court below were wrong as to certain of the prior patents and as to whether invention was involved over those patents. The same arguments were fully presented and resolved against the petitioner in the court below.

BRIEF COMMENT ON THE GROUNDS RELIED UPON BY THE PETITIONER IN SEEKING THE WRIT.

1. FOR ITS FIRST GROUND, petitioner argues that this case, in which the court below, one judge dissenting, has reversed the District Court,[1] is one of "very great industrial and public importance, involving an attempt to dominate one of the largest industries of the country which affects millions of people."

There is no basis in the record for the assertions quoted. The case concerns only those who use or contribute to the use of the *process*—a small group of companies. It is no reason for the intervention of this Court that the patent happens to be used by motion picture producers who supply film to a large industry and of course they may use their licensor's sound-on-disc system.

The decision below raises no question of importance within the terms of Rule 38, sec. 5(b) of this Court. The test of importance justifying the writ within the terms of the rule relates to the law and not to the parties or the interests involved.

2. FOR ITS SECOND GROUND, petitioner contends that the court below "has adopted a much lower standard of invention than is laid down in the decisions of this Court, citing *DeForest Radio Co.* v. *General Electric Co.*, 283 U. S. 664.

The question whether a patent involves invention is one of fact. *Thomson Co.* v. *Ford Motor Co.*, 265 U. S. 445;

---

[1]The situation here is obviously unlike that presented in *Radio Corporation of America, et al.*, v. *Radio Engineering Laboratories, Inc.* (No. 619—October Term, 1933, decided in this Court May 21, 1934), where the decision of the Circuit Court of Appeals was apparently in direct conflict on precisely the same evidence with the earlier decision of this Court in *Westinghouse Electric & Manufacturing Co.* v. *DeForest Radio Telephone & Telegraph Co.*, 278 U. S. 562.

Concrete Appliances Co. v. *Gomery*, 269 U. S. 177, 180. It has been weighed by the Circuit Court of Appeals in the light of the decision of the District Court and it has been decided against the contention of the petitioner upon a careful review of the evidence.

There is no conflict between the standard of invention applied by the court below and that applied by this Court in *DeForest Radio Co.* v. *General Electric Co., supra.* The difference is one of facts. There this Court held that even so simple an improvement as could be brought about by reducing the pressure in the well known low vacuum tube might still be invention (283 U. S. 664, 678), but it found as a fact that the prior art included knowledge and practice of reduced pressure in just such vacuum tubes, and held that the evidence showed that Langmuir's improvement was obvious.

Here, by contrast, the court below has found an essentially different state of facts. It said (Vol. II, p. 1226, Opinions, p. 30):

> "Makers of talking motion pictures, including the Western Electric Co. and its associates, during the period following the application for this patent tried, but until the inventors exhibited this process, accomplished little with the development of sound on film. While all apparatus necessary to practice the present invention was at hand and owned by the Western Electric Co. and its affiliates, no one solved the film problem presented by the requirement of different treatment for sound and picture records."

The court below further found that it was not until the appearance of the invention at bar that the film problem was solved (Vol. III, p. 1226, Opinions, p. 31).

Upon this finding of facts there is no conflict with the decision in *DeForest Radio Co.* v. *General Electric Co., supra,* or with any other decision of this Court. What

the petitioner seeks is a review of the facts found against it in the lower court. There is nothing in the argument presented to merit a review by this Court.

3. FOR ITS THIRD GROUND, petitioner argues "that a valid process patent cannot be based on the application of an old process to a new subject, with no change in the manner of application, and no result substantially distinct in its nature", contending that upon this point the decision below is in conflict with the decisions of this Court in *Brown* v. *Piper,* 91 U. S. 37; *Penn. Railroad* v. *Locomotive Truck Co.,* 110 U. S. 490; *Dreyfus* v. *Searle,* 124 U. S. 60.

The rule relied upon by the petitioner has no bearing upon the case at bar because the process here in suit involves, as the findings in the court below disclose, a *substantial change in the manner of application and a new result, distinct in its nature, from anything in the prior art.* The opinion of the court below includes the following (Vol. III, p. 1227, Opinions, p. 32):

> "The new process permits both the sound record and the picture record on the positive film to be as perfect as the arts of photography and telephony can make them and neither is compromised in quality by reason of the presence of the other, as was the case in single film systems." * * * "While it might be said that superficially the positives so produced are similar to the positives produced by the single film system, still the function and effect is different and in the practical art that difference has been demonstrated. *Combining steps of the double film system and steps of the single film system, the inventors have made a combination, and a process for achieving a new result which has been effective and enduring and has become the standard practice in the industry.*
>
> "The practical importance and achievement of the invention lies in its product—a one piece positive film

having side by side in fixed synchronism on one face picture sequences and sound sequences, each having been recorded simultaneously on separate negatives and developed separately according to its own requirements." (Emphasis ours.)

These facts having been found in the court below, its decision is clearly not in conflict with the cases cited nor with the decision of this Court, in *Concrete Appliances Co.* v. *Gomery*, 269 U. S. 177, also relied upon by the petitioner to establish a conflict.

In the *Penn. Railroad* case the invention claimed involved merely the taking of a particular type of truck long in use under railway cars, and placing it under a locomotive engine. This Court found that the use of the truck under the locomotive was neither a new use nor did it produce a new result or effect.

In *Brown* v. *Piper* the invention involved the application of a well known method of refrigeration used for ice cream, corpses, etc., to the preservation of fish, where no new result or effect was accomplished.

In *Dreyfus* v. *Searle* the patent involved the application of artificial heat to the inside of a barrel of wine to age the wine, when it was old to apply artificial heat for the same purpose to the outside; and this Court found that no different effect or result was accomplished.

In *Concrete Appliance Co.* v. *Gomery, supra,* the patent claimed apparatus for conveying wet concrete in building construction when similar apparatus had previously been used for conveying grain, coal, crushed stone, dry concrete and other mobile substances. The court held that the question of invention is one of fact dependent upon consideration of the state of the prior art as applied to the particular device (p. 180).

The rule of decision applied in these cases and settled by many decisions of this Court, is best stated in the *Penn. Railroad Case,* as follows (p. 494):

> "It is settled by many decisions of this court, which it is unnecessary to quote from or refer to in detail, that the application of an old process or machine to a similar or analogous subject, with no change in the manner of application, and no result substantially distinct in its nature, will not sustain a patent, even if the new form of result has not before been contemplated."

The process in suit, being novel both in the manner of its application and in its result, clearly falls within the saving exception and not within the condemnation of the rule quoted above.

4. FOR ITS FOURTH GROUND, petitioner argues that Claims 8 and 9 are broader than the invention disclosed in the original application and that by their insertion the application was unlawfully expanded during its pendency in the Patent Office to cover the intervening commercial art, contending that the decision below is in conflict with the decisions of this Court in *Railway Co.* v. *Sayles,* 97 U. S. 554 and *Pattee Plow Co.* v. *Kingman,* 129 U. S. 294.

The court below held that claims 8 and 9 were justified by the original disclosure (Vol. III, p. 1231, Opinions, p. 36). And it is only literally true (as asserted in the Petition and Brief, pp. 26 and 28) that those claims were inserted in the application in 1931, for claims were asserted in the application by amendment in 1925 (see Claims 3 and 4, Vol. II, p. 499) which are as broad in scope as Claims 8 and 9 in suit (Vol. II, p. 469). This amendment antedated any adverse rights.

The court below said on this subject (Vol. III, p. 1231):

> "After March 31, 1925, claims corresponding in scope to claims 8 and 9 in suit were asserted in the application. There were no intervening rights of any

> sort established by the appellee or by the public in the interval between November 25, 1922 and March 31, 1925, nor was there any unreasonable delay on the part of the applicants in *reasserting their invention in the broad scope justified by the original disclosure.*" (Emphasis ours.)

The decisions of this Court cited by petitioner are clearly distinguishable.

In the *Railway* case it appeared that the original application, rejected as defective and insufficient, lay dormant and unaltered in the Patent Office for five years, during which time defendants' machines were put out, and that thereafter new drawings and specifications were filed disclosing a new apparatus different in construction and operation from the original. This Court refused to give to this new construction the benefit of the date of the original application.

The *Plow* case involved a reissue patent filed more than two years after the application for the original patent. This Court found that the reissue claim sued on was broader than the original claim and held the patent invalid on that ground, under the well established rule that a patent cannot be broadened by a reissue after two years in the absence of exceptional circumstances excusing the delay.

Neither of these decisions is applicable to the fact situation found in the case at bar. On the contrary, the decision is controlled by *Hobbs* v. *Beach*, 180 U. S. 383, 395-397, where this Court distinguished the *Railway* case and expressly approved the broadening of claims within the original disclosure in the absence of intervening rights. This is such a case and the decision below is not in conflict on this point with the applicable decisions of this Court.

Even when implication from the specifications of the original application is necessary to support the new claims, this Court will sustain such claims provided they have not

been expanded beyond what may be reasonably implied from the original disclosure. *Abercrombie & Fitch* v. *Baldwin,* 245 U. S. 198, 206-207.

5. FOR ITS FIFTH GROUND, petitioner attacks the decision herein sustaining the disclaimer as in conflict with the decision of the Circuit Court of Appeals for the Sixth Circuit in *Fruehauf Trailer Co.* v. *Highway Trailer Co.,* 67 Fed. (2d) 558.

There is no conflict. The disclaimer in the case at bar is entirely different in character from that condemned in the *Fruehauf* case and is of a character often approved by this Court. *Hurlbut* v. *Schillinger,* 130 U. S. 456; *Carnegie Steel Co.* v. *Cambria Iron Works,* 185 U. S. 403; *Minerals Separation* v. *Butte & Superior,* 250 U. S. 336.

Here the petitioner asserts that separate development is "the gist of the original disclosure" (Petition and Brief, p. 28), and then complains that the disclaimer inserts that step into claims 6 and 7 (Petition and Brief, p. 31). The disclaimer in suit is expressly limiting and not broadening in its effect (Vol. II, p. 473); the limitation is fully disclosed in the application for the patent as filed (Vol. II, pp. 479-480); it is admittedly consistent with the teachings of the patent (Vol. II, p. 468); it limits the claims to which it relates to particular forms of the process covered by the original specification.

In *Straus* v. *Crane,* 235 Fed. 126 (C. C. A. 2nd), Judge Learned Hand stated: "We do not mean to suggest that a disclaimer may not add a new element to the combination, thereby limiting it to a part only of what was covered by the specifications. That was the effect of the disclaimer in *Carnegie Steel Co.* v. *Cambria Iron Works,* 185 U. S. 403." The disclaimer sustained by this Court in *Hurlbut* v. *Schillinger,* 130 U. S. 456, had the same effect of limiting the claim to a part only of what was covered by the specifications. In that case the limitation was accomplished by adding a new element to the combination, i. e., the tar

paper or other material between the blocks of concrete (see p. 463).

There was no attempt in the case at bar by merely filing a paper to make a new patent, or one for a different invention from that shown and described in the specification and drawings of the patent. That is what was attempted in *Hailes* v. *Albany Stove Co.*, 123 U. S. 582, as the Court stated at page 587. In that case it was also held:

> "The first claim as modified by the disclaimer has nothing in the specification to stand upon, nothing to explain it, nothing to furnish a reason for it."

Fruehauf Trailer Co. v. *Highway Trailer Co.*, 67 F. (2d) 558 (C. C. A. 6th), involved a set of facts similar to those in the *Hailes* case. The court held that the disclaimer did not limit the combination already claimed but expanded it to cover structures upon which it could not before have been read, and in effect claimed a new and a different combination by the addition of a structural feature which was not disclosed or expressly referred to in the patent. With respect to one of the disclaimers it appears from the opinion of the trial judge, 54 Fed. (2d) 691, that the apparatus claimed in the patent was concededly inoperative, and that the effect of the disclaimer was to add to the invention operative features which were not disclosed at all in the patent, which were not only not thought of by the patentee but were contrary to the instruction of his patent. With respect to the other disclaimer the same situation appeared, because the original claim was directed entirely to a trailer—not a tractor—and contained no reference to a tractor but the disclaimer introduced the tractor—a different machine—making a new claim out of the original—a claim for the combination of a trailer and tractor, see 54 Fed. (2d) 705.

When the opinion in the *Trailer* case is read in the light of the facts there existing, there is no conflict of decisions.

6. FOR ITS SIXTH GROUND, petitioner asserts that the decision below is in conflict with the decision of this Court in *Haughey* v. *Lee*, 151 U. S. 282. The point is without merit.

This Court in the cited case held that one who has sought a patent for a certain invention is not estopped to deny its patentability.

But the court below did not decide that the petitioner is estopped; nor did it rest its decision as to validity on estoppel. It pointed to the formal assertion of patentability of the subject matter by the Western Electric Company scientist, Dr. Wente, as a denial of the contrary argument of the Western Electric attorneys (Vol. III, p. 1228, Opinions, p. 33); and then it proceeded to examine the prior art item by item and to determine the question of validity on the merits (Vol. III, pp. 1229, 1230, Opinions, pp. 34, 35).

7. FOR ITS SEVENTH GROUND, petitioner argues that the question whether the prior French patent to the same inventors "is or is not for the same invention as the United States patent" in suit raises an important question of law which should be settled by this Court.

Petitioner's argument raises no question of law at all, but simply one of fact. *Leeds & Catlin* v. *Victor Talking Machine Co.*, 213 U. S. 301, 322-323. The applicable rule of law has been definitely settled by this Court in *Leeds & Catlin Co.* v. *Victor Talking Machine Co., supra,* and *Fire Ball Gas Tank & Ill. Co.* v. *Commercial Acetylene Co.,* 239 U. S. 156. Those cases establish the rule that forfeiture under R. S., 4887, depends upon the identity of invention claimed in the two patents; that claims are independent inventions; that a process claim is a distinct invention from an apparatus claim, and that although certain elements may be common to the claims of both patents this does not establish their identity.

Applying these rules, the court below said (Vol. III, p. 1232, Opinions, pp. 37, 38):

> "The question becomes one of identity between them. There is no such identity here. The French patent is for a photo-phonetic film, namely, an apparatus or product claim, which cannot be identical with or fatal to a process claim. *Leeds & Catlin* v. *Victor Talking Machine Co., supra; Fireball Gas Tank & Illuminating Co.* v. *Commercial Acetylene Co.*, 239 U. S. 156. The French patent is essentially a proposal for escaping from the difficulties of recording natural sounds accompanying the action. The significance of the independent recording of concomitant sounds is apparent from the language of the specification. Nowhere in the French claims or specification is there a suggestion of the characteristic feature of separate and independent development of the negatives to compensate for different exposure in recording."

In view of the decisions in the *Victor Talking Machine case, supra*, and the *Fireball Gas Tank case, supra*, the earlier decision in *Seeman* v. *Sellers*, 123 U. S. 276, cannot be read in qualification of the rules so clearly laid down in the later decisions of this Court which expressly limit the decision in *Seeman* v. *Sellers* to the facts that were under consideration in that case, which disclosed identity of invention.

CONCLUSION.

The decision below is correct. It is in accord with the applicable decisions of this Court and is not in conflict with the decision of any other Circuit Court of Appeals. The questions presented involve the application of well settled rules of law to facts peculiar to this case, are not of general importance and are not worthy of review in this Court.

Respectfully submitted,

THOMAS D. THACHER,
THEODORE S. KENYON,
S. MORTIMER WARD, JR.,
Counsel for Respondent.

September, 1934.

FILE COPY

Office Supreme Court, U.S.
FILED
JAN 11 1935
CHARLES ELMORE CROPLEY
CLERK

IN THE

Supreme Court of the United States,

OCTOBER TERM, 1934.

No. 254.

PARAMOUNT PUBLIX CORPORATION,

Petitioner,

vs.

AMERICAN TRI-ERGON CORPORATION,

Respondent.

BRIEF FOR RESPONDENT.

GEORGE WHARTON PEPPER,
THEODORE S. KENYON,
Counsel for Respondent.

THOMAS D. THACHER,
S. MORTIMER WARD, JR.,
Of Counsel.

[illegible] Post Job Printing Office, Inc., 154 Fulton St., New York, N. Y.

INDEX.

	PAGE
Opinions Below	1
Jurisdiction	1
The Questions Presented	1
Statement as to the Invention	3
Argument	7
I. Anticipation	7
II. Invention	11
Haines British patent No. 18,057	13
Rosenberg British patent No. 23,620	14
MacCarty French patent No. 448,757	15
Ries patent No. 1,473,976	15
Craig patent No. 1,260,338	15
Walker patent No. 1,186,717	18
Reimer German patent No. 279,598	19
Bullis patent No. 1,335,651	19
Greensfelder patent No. 1,254,684	22
The Law on the question of invention	25
III. Analogous Use	34
IV. Commercial Success	39
V. Coercion	45
VI. Claims 8 and 9	47
VII. Disclaimer	49
Conclusion	50

TABLE OF CASES.

	PAGE
Aron *v.* Manhattan Railway Co., 132 U. S. 84	32
Barbed Wire Patent Case, 143 U. S. 275	21
Brown *v.* Piper, 91 U. S. 37	37
Carnegie Steel Co. *v.* Cambria Iron Co., 185 U. S. 403	29
Concrete Appliances Co. *v.* Gomery, 269 U. S. 177	32, 38
DeForest Radio Co. *v.* General Electric Co., 283 U. S. 664	33
Diamond Rubber Co. *v.* Consol. Rubber Tire Co., 220 U. S. 428	11
Dreyfus *v.* Searle, 124 U. S. 60	38
Eibel Process Co. *v.* Minnesota & Ontario Paper Co., 261 U. S. 45	26
Expanded Metal Co. *v.* Bradford, 214 U. S. 366	28
Grinnell Washing Mach. Co. *v.* Johnson Co., 247 U. S. 426	32
Hobbs *v.* Beach, 180 U. S. 383	25, 48
Hollister *v.* Benedict Mfg. Co., 113 U. S. 59	32
Loom Company *v.* Higgins, 105 U. S. 580	29
Minerals Separation, Ltd. *v.* Butte & Superior, 250 U. S. 336	50
Overland *v.* Packard, 274 U. S. 417	48
Penn. Railroad Co. *v.* Locomotive Engine Safety Truck Co., 110 U. S. 490	38
Powers-Kennedy Contracting Corp. *v.* Concrete Mixing and Conveying Co., 282 U. S. 175	32
Saranac Machine Corp. *v.* Wirebounds Patent Co., 282 U. S. 704	32
Seabury *v.* Am Ende, 152 U. S. 561	30
Stanley Co. of America *v.* American Tel. & Tel. Co. *et al.*, 4 Fed. Supp. 80	6, 46
Sugar Apparatus *v.* Yaryan, 43 Fed. 140	43
Western Electric Co. *v.* Wallerstein, 60 Fed. (2d) 723, 724	50
Wirebounds Patents Co. *et al.* *v.* Saranac Auto. Machine Corp., 37 Fed. (2d) 830	48

IN THE

Supreme Court of the United States

PARAMOUNT PUBLIX CORPORATION, Petitioner.	
vs.	No. 254
AMERICAN TRI-ERGON CORPORATION, Respondent.	

BRIEF FOR RESPONDENT.

Opinions Below.

The patent in suit was held valid and infringed by the Circuit Court of Appeals for the Second Circuit, 71 Fed. (2d) 153, reversing the decree of the District Court in which the patent was held invalid, 4 Fed. Supp. 462.

Jurisdiction.

The jurisdiction of this court rests on §240(a) of the Judicial Code as amended by the Act of February 13, 1925, c. 225, 43 Stats. 938; 28 U. S. C. §347.

The Questions Presented.

The patent in suit is No. 1,825,598, issued to the respondent on September 29, 1931 on application of Vogt, Massolle and Engl filed March 29, 1922, and having a

priority date of April 14, 1921 when the corresponding German application was filed (R. p. 468).*

The claims relied on are Nos. 5, 6, 7, 8, 9 and 11, claims 6 and 7 being read with the disclaimer (R. p. 472).

The only issue before this court is the issue of validity. The respondent's title to the patent in suit is unquestioned. Infringement though hotly contested at the trial is undisputed here (Petitioner's Brief, p. 2).

As to validity, the questions presented for decision are these:

1. Are the claims in suit invalid because of anticipation? (First half of the 2nd Specification of Error.)

2. Did the court below adopt a lower standard of invention than that laid down in the decisions of this court and are the claims invalid for want of invention? (Second half of the 2nd and first half of the 3rd Specification of Error.)

3. Did the court below overlook the rule that the application of old processes to new but analogous subject matter is not invention? (Second half of the 3rd Specification of Error.)

4. Did the court below improperly sustain the claim of invention by reference to the commercial use of the process in suit? (4th Specification of Error.)

5. Are claims 8 and 9 of the patent in suit for a broader and different invention from that of the application as filed? (5th Specification of Error.)

6. Is the disclaimer valid? (6th Specification of Error.)

---

* The application was held up for five and a half years in the Patent Office by an interference with DeForest, which was decided favorably to applicants in all of the tribunals of the Patent Office and, in May 1931, by the Court of Customs and Patent Appeals (R. pp. 534, 535).

After a brief statement as to the invention in issue, our argument will take up these points in order without further summary. In the course of the argument notice will be taken of the baseless charge of "coercion" brought against the respondent in the petition for rehearing heretofore filed in this cause.

Statement as to the invention.

The patent in suit is for a process, ingenious in its simplicity, for making a combined sound and picture positive film.

The product of the patented process differs from any that was previously known or suggested in the fact that the quality of the pictures is not injuriously affected one iota by the presence of the sound track on the film beside it, nor is the quality of the sound track injured by the presence of the pictures. This feature of the product, made possible by the process of its manufacture, distinguishes both process and product from any prior patent or suggestion of the art, and accounts for its wide use by the industry.

The process comprises as its first step the recording of moving pictures of action on one negative film, and at the same time recording the natural sounds accompanying the action on another negative film. In the case of the pictures this requires ordinarily a speed of sixteen exposures per second. In the case of the sound, it requires exposures of an entirely different order, averaging 4500 per second (R. p. 341). The pictures are taken under varying lighting conditions (Patent in suit, R. p. 468, ll. 10-12). The sound record is made by modulations of a normally steady light source (R. p. 468, l. 17).

As the next step of the process, the separately but simultaneously exposed negatives are subjected to separate, differential development, each according to its distinct requirements. For in addition to the differences in ex-

posure, it is characteristic of sound and pictures that they must be developed to different "contrasts" or "gamma" values (as the experts describe it, R. pp. 63-65, 250) in order to produce results of the best quality in each.

Finally, these two negatives, so separately recorded and separately developed, are printed upon a single positive to form images of the pictures and of the sound side by side on the same face of the positive film.

The product is a unitary sound and picture positive film in which the respective records are each independently recorded and developed to the best advantage and neither is compromised in quality by reason of the presence of the other. Because the product of this process is uncompromised in quality either as to sound or as to pictures, it is distinguished from every suggestion of the prior art and has become the standard product of the industry.

Claim 5 is typical of the specific process claimed in the patent and admittedly used by the petitioner (Petitioner's brief, p. 2) and by the industry in general (R. pp. 65, 197, 199). It reads as follows:

> "5. A process for producing a combined sound and picture positive film, for talking moving pictures, comprising, photographing a sequence of pictures on one length of film, and simultaneously photographing on another length of film a corresponding sequence of sounds accompanying the action, separately developing the two negatives in a manner appropriate for each, and printing the sound and picture negatives respectively upon different longitudinally extending portions of the same sensitized film, to form the sound sequence at one side of and along the picture sequence."

A chart showing the process in suit as practiced by the petitioner (see R. p. 588) is here inserted for convenience of reference. The details of the printing step as practiced by the petitioner are shown in the chart printed at page 48 of petitioner's brief (see R. pp. 53, 589).

The prior art knew theoretically from paper patents how to make a single positive film carrying sound and picture records. But never had such a product been sug-

CHART SHOWING PROCESS AS PER DEFENDANT'S ADMISSION

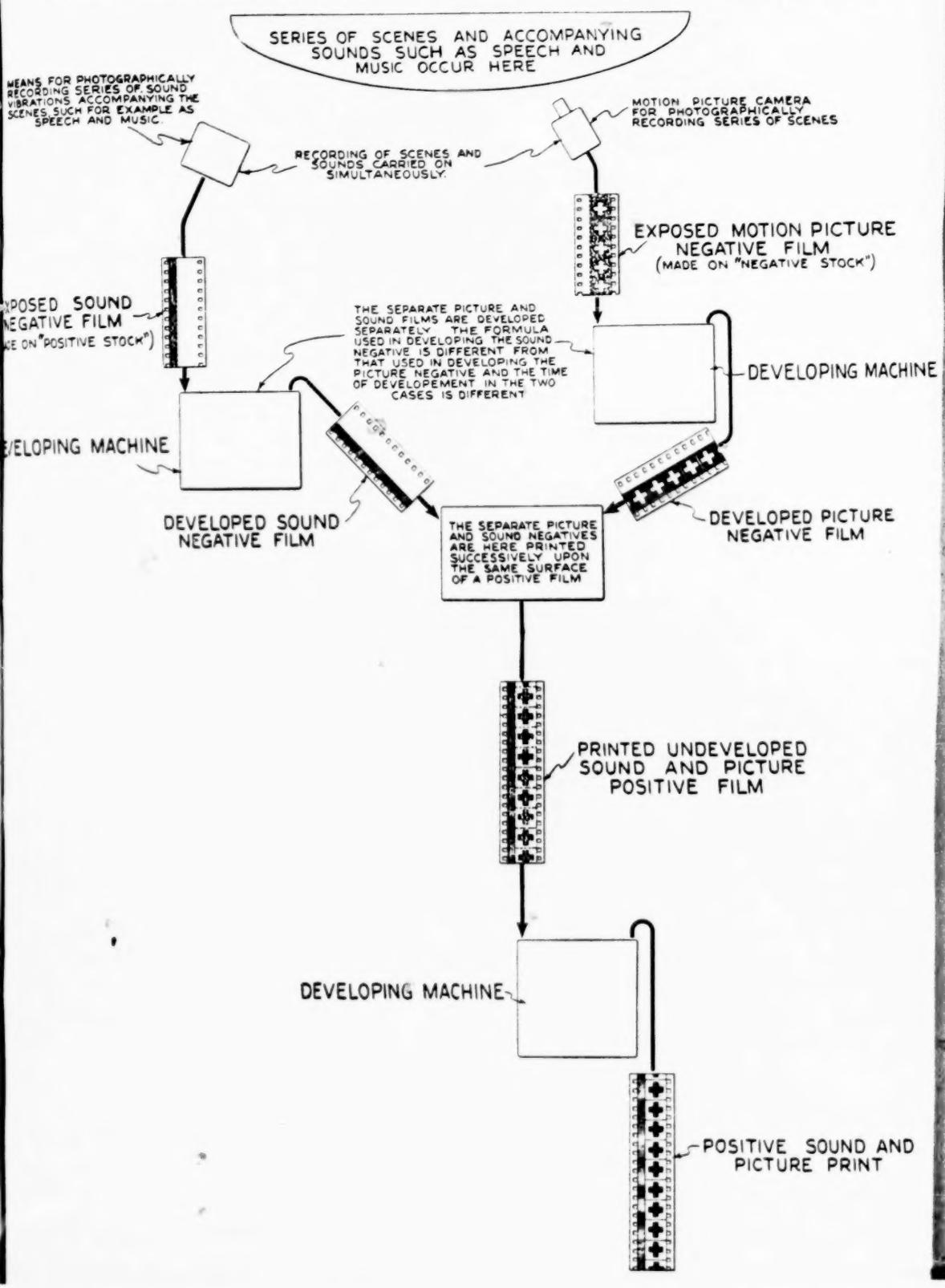

gested with provision for differential recording and differential developing of the respective records. To say that combined sound and picture films were old before the invention in suit, is to say no more than that the *problem* was old. For in the unitary sound and picture films previously suggested, the sound and pictures were to be recorded on the same negative, developed as a unit and printed from that single negative upon a single positive. By this means the quality of one or both records had to be sacrificed not only in the recording, but in the developing steps by reason of the presence of the other, and the resulting positive was commercially unacceptable. *The problem was to make a combined sound and picture positive that the public would listen to.*

That problem had baffled the art for fifteen years before Vogt, *et al.,* made their invention. It baffled the prior inventors in that art so completely that not a single instance of practical use of sound-on-film prior to 1921 has been attempted to be proved. It baffled the best engineers and research scientists of the Western Electric Company, whose wholly owned subsidiary, *Electrical* Research Products, Inc. (note the name), is conducting the defense in this suit (R. p. 27). Before the Tri-Ergon process, including the process in suit, was disclosed to the Western Electric engineers they had all but abandoned their ten-year effort to make talking pictures by the use of sound-on-film (R. p. 356-359) and had achieved commercial success in August 1926 by the wholly different method of sound-on-disc (R. p. 314). After the demonstration of the Tri-Ergon system to them in late 1926 and the first six months of 1927 by Dr. Engl—one of the patentees,—the process in suit, by its sheer merit and effectiveness in supplying the long felt want, spread from one Western Electric producer-licensee to another, till by the time of the trial it had been almost universally accepted as the standard practice of the industry (R. p. 421).

Western Electric Company, through its dominance of the *electrical* patents used in the amplifying, recording and reproducing of the sounds, has had the talking picture industry, including producers as well as exhibitors, under its complete control* by licenses (non-terminable for 17 years, R. p. 332) issued by its subsidiary, Electrical Research Products, Inc., which was organized for that purpose. By reason of its failure with sound-on-film and its success with sound-on-disc, the Western Electric Company was committed to the latter system and consistently opposed the former (R. p. 414). Despite this powerful opposition the industry progressively demanded sound-on-film and sound-on-film superseded sound-on-disc. To-day sound-on-film is the method of recording sound in synchronism with pictures which has been accepted by all Western Electric licensees both because of the excellence of the result produced and the economical character of the process (R. p. 421).

The widely acclaimed "Western Electric Sound System" embodies the process of the patent in suit. It is the process which that company failed to achieve by its own research; the significance of which it failed to appreciate even when demonstrated to it in 1927; the commercial use of which it at first opposed but finally adopted as an integral part of its standard system. Yet this is the process which it now asserts to be unpatentable because perfectly obvious and all along known.

---

*See decision of Judge Nields in *Stanley Co. of America Inc.*, v. *American Tel. & Tel. Co. et al.*, 4 Fed. Supp. 80, holding the system of contracts illegal as violative of the anti-trust laws.

ARGUMENT.

I. Anticipation.

Petitioner's brief presents no defense of direct anticipation of the invention in suit. Each of the prior patents and publications referred to in the petitioner's brief and in the record, and each of the references to prior use of "composite printing" differs in one or more important respects from the invention which the patent in suit proposes and which the petitioner uses.

Indeed petitioner's brief states at page 2:

> "The principal question is whether, in view of the prior art, there was any invention."

and at page 21 it criticizes:

> "The method used by the court below in testing the patent in suit by reference to the prior art, * * * *in that it was limited to a search for some prior patent which, taken alone, read literally in every particular on the patent in suit,* thus disregarding the question of invention over the prior art."*

If there had been any proof of anticipation we may be sure that petitioner's brief would not have failed to point it out. But there is none, and the burden of petitioner's defense is placed on other grounds.

Prior to 1921, when the invention in suit was made, it is literally true that no such product as that produced by the process in suit had been described, used or suggested. We will now point out how that new product, characterized by the new and useful method for obtaining it, differed from any product known before 1921.

The single film system.

Single positive films carrying a picture sequence and a record of sounds accompanying the action had been pro-

* The italics used in this brief are ours, except where otherwise noted.

posed—as in *Haines* (1906—R. p. 1074), *Rosenberg* (1911—R. p. 883), *MacCarty* (1912—R. p. 924), *Ries* (1913—R. p. 591), *Walker* (1913—R. p. 852), etc. But these single positive films were invariably described as the product of the *single film system*, involving the recording of the sounds and pictures on a *single* negative film, developing that film *as a unit* and then printing the sound and picture records from the *single* negative film upon a *single* positive.

The *defect* in the single film system, pointed out in the patent in suit, and borne out by the experience of the subsequent art, lies in the fact that there are differential requirements of recording and developing as between pictures and sound. Pictures are not uniformly exposed on the negative film and require one type of development and one degree of "contrast" or "gamma" for the best optical results (R. p. 29); while the sound track is exposed to modulations of a uniform light source and requires a different type of development and a different degree of "contrast" or "gamma" for the best sound results (R. p. 29). No single developing treatment is appropriate to both, and simultaneous development in a single developer produces bad pictures or bad sound or a composite in which neither is good enough for quality reproduction.

Because the single film system permitted no separate recording and differential development of the sound and picture sequences it has never been accepted as a process for making talking pictures of good quality. It is used today only for news reels where the sounds accompanying the action are of subordinate importance, and where the interpretation of the picture is made by printed titles and oral comment supplied by "scoring" after the film is made.

The double film system.

In addition the prior art had proposed the so-called *double film system*—as in *Rosenberg* (1911—R. p. 883), *Bullis* (1920—R. p. 715), etc. Here the sound and pictures were to be recorded simultaneously on separate films. The picture negative was to be developed and printed on one positive film. The sound negative was to be separately developed and separately printed on another positive film.

The *defect* in the double film system was that in practice it would have required two separate projectors, one for the picture positive, the other for the sound positive. The necessity of using and synchronizing a double set of projectors made the double film system commercially undesirable (R. pp. 343, 354).

Various suggestions were made in the *Bullis* patent, referred to (*infra*, p. 19), for combining the *two separate positive films* on a single projector. They were cumbersome, impractical or inoperative. The practical art passed them by.

Because the double film system did not permit the use of a single or unitary positive print, it failed to solve the practical problem.

By the invention of the process in suit the patentees achieved a new and critically important result.

They showed a method for producing a single unitary positive film for use in talking motion picture reproduction, the film carrying a sound track and a picture sequence side by side, *each being as perfect as the arts of photography and sound recording could make it, and neither being compromised in quality by reason of the presence of the other.* No such product had ever been made or described before.

By thus combining steps from the single film process with steps from the double film process the patentees achieved a result that was new in kind, and of such

importance in respect to the quality of sound and pictures reproduced that it has become the standard practice of the industry.

Petitioner's brief does not once refer to the novel qualities of the product of the process in suit notwithstanding that they are attested by its almost universal use. On the contrary, it seeks to give the impression, not once, but many times (See petitioner's brief, pp. 8 and 19), that the product of the process in suit is no different from "the old single positive film" which had been proposed in many prior paper patents. Indeed, in the Petition for Rehearing of the Petition for Writ of Certiorari herein it is stated (at p. 7) that

> "The patent is for a method of producing positive film prints for talking pictures having a photographic record of action and a photographic record of the accompanying sound printed side by side on its face,—*an old product.*"

This statement is wholly inaccurate and highly prejudicial. Certainly the practical art has found a critical and decisive difference between sound films of the news reel type and sound films such as are used in the production of standard high quality talking pictures. The news reel film belongs in the single film category with unit development of sound and picture. The film used for the reproduction of the high quality talking picture is the film made by the process covered by the patent in suit and is the product of differential exposure and differential development combined in a single uncompromised positive.

If all the sound films the public had to listen to were no better than the news reels, we venture to say that the "talkies" would not yet have superseded the silent "movies." If it were true, as stated at pages 8 and 19 of petitioner's brief, that the patentee's purpose was to "finish up with *the old single positive*" there would be no need of a lawsuit to enjoin its use. The petitioner would not use it; the public would not come or stay to listen to it.

It was precisely because the Circuit Court of Appeals appreciated the distinction which the petitioner's brief ignores that the patent was sustained in that court and the decree of the District Court reversed. The Circuit Court of Appeals recognized that the process in suit owed its existence to the spark of genius which by simple means produced a result never before achieved or suggested.

II. Invention.

The question whether the court below adopted a lower standard of invention than that required by the decisions of this Court does not differ from the question whether the process in suit involves invention. We will treat both specifications of error together.

It is respondent's position that the patent in suit is for a specific improvement of outstanding value. Within its scope it has made an important contribution to the progress of the useful arts. It has won its way to success despite the powerful opposition of the Western Electric Company and despite the preference of the art in its first commercial stages for the disc system.

On the authority of the decision of this Court in the *Grant Tire* case* and for much the same reasons that moved this Court to hold that patent valid, we submit that the invention of the patent at bar is meritorious and that the decision of the Circuit Court of Appeals sustaining it should be affirmed.

In the historic case referred to, this Court said, at pages 434-435:

> "The tire has utility, a utility that has secured an almost universal acceptance and employment of it, as will subsequently appear. It was certainly not an exact repetition of the prior art. It attained an end not attained by anything in the prior art, and has

* *Diamond Rubber Co.* v. *Consol. Rubber Tire Co.*, 220 U. S. 428, pp. 434-5.

been accepted as the termination of the struggle for a completely successful tire. It possesses such amount of change from the prior art as to have received the approval of the Patent Office, and is entitled to the presumption of invention which attaches to a patent. Its simplicity should not blind us as to its character. Many things, and the patent law abounds in illustrations, seem obvious after they have been done, and, 'in the light of the accomplished result,' it is often a matter of wonder how they so long 'eluded the search of the discoverer and set at defiance the speculations of inventive genius.' *Pearl* v. *Ocean Mills*, 11 Off. Gaz. 2. Knowledge after the event is always easy, and problems once solved present no difficulties, indeed, may be represented as never having had any, and expert witnesses may be brought forward to show that the new thing which seemed to have eluded the search of the world was always ready at hand and easy to be seen by a merely skilful attention. But the law has other tests of the invention than subtle conjectures of what might have been seen and yet was not. It regards a change as evidence of novelty, the acceptance and utility of change as a further evidence, even as demonstration. And it recognizes degrees of change, dividing inventions into primary and secondary, and as they are, one or the other, gives a proportionate dominion to its patent grant. In other words, the invention may be broadly new, subjecting all that comes after it to tribute (*Railway Company* v. *Sayles*, 97 U. S. 554, 556); it may be the successor, in a sense, of all that went before, a step only in the march of improvement, and limited, therefore, to its precise form and elements, as the patent in suit is conceded to be. In its narrow and humble form it may not excite our wonder as may the broader or pretentious form, but it has as firm a right to protection."

and at pages 440-441:

"The utility of the Grant patent, therefore, was not attained in the Willoughby patent. The Rubber Company's conduct is confirmation of this. It uses the Grant tire, as we shall presently see, not the Willoughby tires. Let it be granted that they afforded

> suggestions to Grant, and that he has gone but one step beyond them. It is conceded, as we have said, that his invention is a narrow one—a step beyond the prior art—built upon it, it may be, and only an improvement upon it. Its legal evasion may be the easier, (*Railway Co.* v. *Sayles, supra*), and hence we see the strength of the concession to its advance beyond the prior art and of its novelty and utility by the Rubber Company's imitation of it. The prior art was open to the Rubber Company. That 'art was crowded,' it says, 'with numerous prototypes and predecessors' of the Grant tire, and they, it is insisted, possessed all of the qualities which the dreams of experts attributed to the Grant tire. *And yet the Rubber Company uses the Grant tire. It gives the tribute of its praise to the prior art; it gives the Grant tire the tribute of its imitation as others have done.*"

On the issue of invention, petitioner's brief refers to certain "prior knowledge and practices" (pp. 8-17).

Let it be noted that the "practices" thought worthy of notice are limited to the "Biograph" incident (Petitioner's Brief, p. 11) and the general testimony of defendant's expert Jones. These items of evidence relate solely to the field of composite photography. Since they bear no relation to the prior art in the field of talking motion pictures, they will be considered in the section of this brief dealing with "Analogous Use." All of the remaining instances of the prior art adverted to fall under the head of "knowledge" as distinguished from "practice". There is no attempt to deny that prior to 1921 no practical art of sound-on-film had been developed. The knowledge of the art lay in the realm of untried theory evidenced only by "paper patents".

We will consider now the prior patents in the art of sound-on-film, reserving for a later chapter the patents and "practices" referred to as in the art of composite printing.

The *Haines* British Patent No. 18,057 of 1906 (R. p. 1074) referred to by the petitioner, is the earliest patent

of record relating to sound-on-film. It proposes many of the features of that system for which the Western Electric Company claims credit today; including the electrical transmission of the sound waves from the place where the sounds originate to the place where they are recorded, the recording of the sound waves, photographically by variations in intensity corresponding to the period and amplitude of the sounds, simultaneously with the photographic recording of the scenes; followed by the projection of the moving pictures on a screen while simultaneously employing the sound track on the film to control a selenium cell to vary the electric currents in a telephone system operating to reproduce the sound waves.

It is clear from the description that both the picture series and the sound track were to be recorded on the *same negative film*. The patent is an excellent exposition of the single film system first used commercially in 1926 by the Fox Case Company and now relegated to the news reels.

The *Rosenberg* British patent No. 23,620 of 1911 (R. p. 883) teaches two alternative systems. If the sound and picture records are taken in the first instance on separate negative films the patent teaches that they are then to be printed on separate positives. On the other hand, if taken in the first instance on the same negative film they are then to be printed on the same positive film (Jones, R. p. 295). In other words, *Rosenberg illustrates both of the proposed systems of the prior art*, the single film system wherein the sound and picture record are taken on a single film, developed on that single film and printed on a single positive film; and the double film system where the picture and sound records are to be kept on separate films throughout. But he makes no suggestion of a combination of those two systems nor does he disclose any process whereby a single positive film may be produced upon which the sound and picture

sequences have been printed after separate development of each appropriate to their respective requirements.

With both of these proposals before him, neither he nor any one else prior to the invention in suit, ten years later, conceived of combining them to avoid the difficulties inherent in each.

MacCarty French patent No. 448,757 of 1912 (R. p. 924) discloses according to Jones (R. p. 188):

> "the simultaneous recording of sound and picture on the same sensitive photographic film".

This patent is an example of the single film system. It has no suggestion of separate development of the sound and picture sequences.

Ries patent No. 1,473,976 (application filed in 1913, R. p. 591) is another example of the same single film system. The patent emphasizes that since the pictures must be taken while the film is moving intermittently and the sound record must be made while the film is moving at uniform speed, the simultaneous exposures for the picture and sound records must be made at separated portions of the negative film.

In this Ries was apparently re-stating what had been described in Haines above. There is no suggestion of separate development of the sound and picture sequences nor of the making of a single positive film having printed thereon both the sound and picture sequences after separate development of each in manner appropriate to its particular requirements.

Craig patent No. 1,260,338 (application filed in 1914, R. p. 728) *was a Patent Office reference, over which the claims in issue were held patentable.* It discloses an arrangement that is utterly impracticable; that has never contributed in the slightest degree to the advance of the practical art, though owned by the Eastman Kodak Co.; and stands condemned by the experts for both parties on this record as a monument of ingenious impotence.

Craig proposed to employ two separate negatives for recording the sound and picture sequences. He pro-

posed to print the picture sequence on the sensitized emulsion lying on one face of the positive film, then develop and fix that print to make a record of the picture sequences as in the case of an ordinary positive film for silent moving pictures. Thereafter he proposed to coat the opposite face of the positive film with a photographic emulsion and print, develop and fix the sound record on this second sensitized surface with the result that his picture record would be on one face of the positive film and his sound record on the opposite face *overlying* the picture record. Obviously these overlying records would each destroy the usefulness of the other unless some means were obtainable for effectively projecting different kinds of rays through them; one kind of ray for the projection of the pictures that would be unaffected by the sound record, and a different kind of ray for the projection of the sound that would not be affected by the picture record. It was Craig's theory to use infra-red rays for projecting the sound record and to print the sound record with a material that was wholly transparent to ordinary light rays but impervious to infra-red rays.

He not only failed to disclose any material for the sound record that would be wholly transparent to the light rays proposed for the picture reproduction, but he did not even attempt to disclose any material for the picture record that would be transparent to the infra-red rays proposed for the sound reproduction. His patent is visionary and worthless.

Prof. Ballard went over one by one all the materials suggested by Craig for producing a sound track on the back of the positive that would be transparent to visible light rays and impervious to infra-red rays. Everyone of them was either impossible to apply by any known method or else was impervious to both kinds of rays. Further he pointed out that the infra-red rays used in connection with the sound record would be decidedly affected by the picture record, and its result in his judgment

> "would consist of a jumble of unintelligible noises produced by the passage of the picture record in the path of the infra red rays" (R. pp. 438-440).

He said (R. p. 445):

> "So far as I know, no one has ever been able to make a satisfactory film by the Craig process. * * * It is completely inoperative for many different reasons."

Jones (petitioner's expert, and chief physicist in the research laboratory of the company that owns the Craig patent) went over the same ground on cross-examination condemning one after another of the chemicals suggested by Craig for accomplishing his purpose as useless and not practical. He agreed that Craig does not "show or describe anywhere a sound and picture record on a single film where the sound and picture records do not overlie each other so that they interfere one with the other if ordinary light was used to reproduce both" (R. p. 274). He said of Craig (R. p. 276):

> "in what he was *trying* to do, in the process he was *attempting* to operate, he wanted to print on opposite sides."

The experts are about as near to an agreement as experts can be in asserting it to be wholly inoperative.

Furthermore, the only recited purpose and advantage in using separate films was to permit the picture sequence to be printed at its full width on the positive film and the sound sequence to be printed at full width on the opposite face of the positive film. That is not true of the patent in suit; it is not true of the petitioner's process.

The *Craig* patent is owned by the Eastman Kodak Company (Jones, R. p. 176). Yet that enormous organization made nothing useful out of the Craig invention and never could. When an inventor with such resources behind him is incapable of advancing the art or indeed of putting his own speculative and impractical suggestions to use, the circumstance is compelling evidence of the difficulties

which the problem then held for practical men and inventors and is far more eloquent on the issue of obviousness and inventiveness in later developments than any amount of expert testimony given after the fact.

We submit that the Craig patent, far from showing obviousness or lack of invention in the process in suit, is a demonstration of the difficulty of the problem as it appeared to inventors in this art during the decade prior to 1921.

Walker patent No. 1,186,717 (application filed in 1913, R. p. 852) is another reference stressed by the petitioner. Except for one modification Walker's disclosure is limited to the old, single film system; the sound and pictures were to be taken simultaneously on a single negative, developed together and printed together onto a single positive (R. pp. 262, 263). In the one modification referred to the sole departure from the single film system is that after the single negative film containing the sound and picture sequences has been developed as a unit, Walker describes a method for enlarging the sound record on the positive film by first printing the picture sequence on the positive film and then, by a photographic enlargement system, printing the sound record in enlarged form on the same positive film (Jones, R. p. 263). Jones agreed categorically that

> "In neither of the alternative methods suggested by Walker does Walker separately develop or have any opportunity for separate development of the negatives."

and he agreed that

> "the Walker process is not the process used by the defendant" (R. p. 263).

There is no disclosure whatever in Walker of the outstanding features of the invention in suit, *i. e.*, the separate recording and development of the sound and picture negatives in manner appropriate for each and their subsequent printing on the same positive film. All of the disadvantages that lay in the single film system with its

identical development of both the sound and picture sequences were inherent in Walker's disclosure and no suggestion is given for avoiding them.

We refer also to the *Reimer* German patent No. 279,598 of 1914 (R. p. 919) because, though not mentioned in petitioner's brief, it was singled out by the District Judge in his opinion (R. p. 1186) as appearing to exhaust the novelty of plaintiff's process. His holding, we submit, is contrary to any fair and realistic judgment of the two processes in the light of their actual accomplishment and function. Reimer tried to dodge the whole problem which Vogt and his associates faced by using the now discarded stylus gramophone method. His patent has nothing to do with problems of sound photography or the differential requirements of sound and picture negatives. Instead of producing a single positive film he proposes a clumsy, compound structure comprising two separate records cemented together. Nobody uses such a process or such a product today. The petitioner makes its positive films by the differential process of Vogt *et al.* not by the gramophone process of Reimer. Petitioner produces a single unitary sound and picture positive as described by Vogt *et al.*, not the composite, cemented-together film-and-stylus record of Reimer. If Reimer teaches anything it is that the photographic sound system suggested by Haines, MacCarty and others is too unsatisfactory and presented too many difficulties in 1914 to encourage development along that line. He chose a crude hybrid scheme instead and got nowhere.

If Reimer exhausted the novelty of the process in suit why did the practical art pass it by? Why does not the petitioner use it today? Obviously, we believe, because Reimer's disclosure is as different from that of Vogt *et al.* as failure is from success.

Bullis patent No. 1,335,651 (application filed in 1915, R. p. 714) *was also a reference in the Patent Office* and was duly considered before the allowance of the

claims in suit. Bullis was the earliest patentee in this record to mention the reason and necessity for separate development of the photographic sound and picture sequences. He proposed to take his picture record and his sound record on separate negative films so that they could be separately developed according to their separate needs, *and he then proposed printing them on separate positive films.* So far he followed the practice of the double film system. But then in an effort to overcome the practical difficulties inherent in the projection of separate sound and picture positives he proposed to project his separate sound and picture positives on the same projector by overlapping their edges in such a way as to make the sprocket holes coincide or by actually cementing the overlapped edges of the *separate positive films* in that relation. The overwhelming practical difficulties involved in the use of such a patched-together positive film structure are recited by respondent's expert Ballard (R. pp. 406-408) and no attempt was made to answer these objections nor was Prof. Ballard cross-examined on the subject. The disadvantages and practical objections to Bullis' proposal were explained at length to the Patent Office (R. pp. 493-496), obviously to the entire satisfaction of the Examiners, since Bullis was not cited again.

The petitioner uses no such process as that proposed by Bullis and makes no such double-film product, for the excellent reason that it uses instead the process of the patent in suit which permits the manufacture of a single unitary positive film, a result that Bullis nowhere conceived or described.

Bullis wrestled with the problem and got part way, but when he had gone so far, he could not complete it.

By contrast, Vogt *et al.* thought the thing through to a successful result. Their conception was of a process for accomplishing a result that Bullis never conceived and never achieved.

This Court has not failed to emphasize in earlier cases the importance of such a forward step on the issue of patentability.

In the *Barbed Wire Patent* case, 143 U. S. 275, this Court said, at pages 282-3:

> "Under such circumstances courts have not been reluctant to sustain a patent to the man who has taken the final step which has turned a failure into a success. In the law of patents it is the last step that wins. It may be strange that, considering the important results obtained by Kelly in his patent, it did not occur to him to substitute a coiled wire in place of the diamond shape prong, but evidently it did not; and to the man to whom it did ought not to be denied the quality of inventor. There are many instances in the reported decisions of this court where a monopoly has been sustained in favor of the last of a series of inventors, all of whom were groping to attain a certain result, which only the last one of the number seemed to grasp." Citing *Loom Company* v. *Higgins,* 105 U. S. 580, 591; *Consolidated Valve Company* v. *Crosby Valve Company,* 113 U. S. 157, 179; *Smith* v. *Goodyear Dental Vulcanite Company,* 93 U. S. 486, 495, and *Magowan* v. *New York Belting Co.,* 141 U. S. 332, 343.

It is sheer hindsight to argue that Vogt, *et al.* did no more than apply ordinary skill in carrying out what Bullis had started. For Bullis had more than ordinary skill. He was an able inventor and had all the contemporary knowledge of the art at his disposal, including everything to which petitioner refers in the art of composite printing. If it had been obvious to print the two separate records on a single positive, he would have said so. Instead he felt it necessary to print them on separate positives and then tried to avoid the difficulty of using two projectors by suggesting the still greater difficulty of fastening or cementing these two positives together.

His teaching was essentially of a double film system throughout with a totally useless idea of cementing the two positives together at the end.*

The teaching of Vogt *et al.* was of a means for achieving a new and uncompromised single film positive that could never be achieved by the single film system, could never be achieved by the double film system, and never was achieved or suggested by Bullis.

Weighing the evidence of the art before Vogt *et al.* and the tribute of subsequent practice against the complacent hindsight of expert advocates, we submit that the advance over Bullis amounted to patentable invention under the law.

The *Greensfelder* patent No. 1,254,684 (R. p. 701—application filed in 1916) *was also a reference in the Patent Office and was exhaustively considered before the allowance of the claims in suit.* It is perfectly plain from Greensfelder's disclosure that he made no pretense of producing a talking motion picture film in the sense of the patent in suit and of the practical art. What Greensfelder *avoided* was the contemporary recording of sounds accompanying the scenes. What he *proposed* is known as "scoring". He knew no means for making a satisfactory sound record of the sounds actually accompanying the action and he therefore eliminated that source of sound altogether. Instead his scheme was to record "sound marks" on the positive picture film to cause the operation of extraneous noise-making machines in accompaniment with the silent motion picture for dramatic effect. According to the Greensfelder patent (R. p. 705) a posi-

---

* It is noteworthy that the German Court has distinguished the corresponding Vogt German patent from the British patent corresponding to Bullis No. 1,335,651 on the ground that the latter shows *two positive films* as well as two negative films. Its decision states (R. p. 789):

> "Until the stage of the unreeling [projection], at all events, this patent knows of no common film."

tive of the silent picture sequence was first *completed* and projected, as in the old art of silent movies. During this silent reproduction another film of "sound marks" was to be prepared and later printed with the original picture negative on a single positive film. Referring to the practice of that time and contrasting his invention with it, Greensfelder said (R. p. 705, line 31 *et seq.*).

> "Unusual sounds, such as the report of a gun, the shriek of a whistle, the clatter of horses' feet, the cry of a child, the ringing of a bell, etc., all of which add greatly to the vividness of the scene, are generally assigned to one of the men in the orchestra to be reproduced as nearly in synchronism with the corresponding action in the picture as possible.
>
> "The object of the present invention is to provide an improved method whereby these various supplemental sounds, or even the piano accompaniment will be produced by the various instruments in exact synchronism with the reproduction on the picture screen of the scene of which they are illustrative."

Greensfelder proposed to carry out his purpose by providing a space for different sound marks adjacent to each frame of the picture sequence. *The location of the sound mark in the space was what controlled the noise to be produced.* Each location was to be connected by a separate selenium cell and train of mechanism with the noise machine corresponding to that location. Thus if the sound mark were recorded at the extreme left of the space it might, for example, effect the beating of a drum. If it were in a different location it might blow a whistle. If it were in still a third location it might ring a bell, etc. (R. p. 705). He proposed to have room enough in this space so that if desired there might be separate locations for as many sound marks as there are keys on a piano, the idea being that, as the film progressed, the sound marks would cause the piano keys to operate after the manner of an old fashioned piano player. As will be seen, the system required a whole battery of noise-making instruments at the reproducing end and a battery of selenium

cells and associated mechanisms such that whenever a sound mark appeared on the frame of a picture the noise-making mechanism corresponding to the location of that sound mark would be actuated to produce the sound. Rube Goldberg of cartoon fame could hardly conceive anything more complicated or impracticable.

Not only are the products of the respective processes of Greensfelder and of Vogt *et al.* entirely different in fact and in function, but the processes themselves are distinct. Greensfelder takes his picture negative, develops and prints it first before trying to make his sound marks at all. The latter are supposed to be made on a separate film after the picture positive has been completed and reproduced as a silent "movie". In no case does the development of Greensfelder's sound mark negative present any problem like that involved in the differential development of the sound and picture negatives of Vogt *et al.*

Greensfelder does not say a word about separate development of picture and sound negatives. As a matter of fact he has no sound negative in the sense of the patent or of the practical art. His sound marks cannot ***re***produce sounds, they simply serve to put noise machines into operation at the place of exhibition of the otherwise silent "movie". His film contains no "*sequence* of sounds accompanying the action" as called for by the claims in suit.

His whole patent is addressed to a method of escape from the problems of photographic recording of the natural sounds accompanying the action. He shuns the very thing that has made the "talkies" supersede the "movies".

Neither in process, product, or result does the Greensfelder disclosure bear any resemblance to that of Vogt *et al.* We believe the officials of the Patent Office were entirely correct in holding this patent no anticipation of the claims in suit. It is, in fact, another and cogent demonstration of the difficulties which an inventor saw in

this art in 1916 and the extremes to which he went to avoid the problem which the patent in suit has overcome.

The law on the question of invention.

In holding that the claims in suit involved invention over the prior art the court below applied and followed the sound principles laid down and established by this Court in classic decisions on the issue of invention.*

In *Hobbs* v. *Beach*, 180 U. S. 383, this Court found invention in the *idea* that by a simple mechanical change an existing device could achieve new results important in giving rise to a new industry. The Beach patent there in suit was for a machine for pasting paper strips over the joints at the corners of pasteboard boxes, which machine was identical except for minor changes with an earlier Dennis and York machine for pasting strips of paper containing addresses on newspapers, envelopes, and the like. In sustaining the patent this Court said (p. 392):

> "While none of the elements of the Beach patent—taken separately or perhaps even in a somewhat similar combination—was new, their adaptation to this new use and the minor changes required for that purpose resulted in the establishment of practically a new industry, and was a decided step in advance of any that had theretofore been made."
>
> * * * * * *
>
> "We agree with the courts below that it did involve invention to see that a machine of the Dennis and York type was adaptable to the work of the Beach

---

* In the case at bar, the facts bearing on the issue of invention are substantially undisputed. The findings of the District Judge are no more than conclusions from undisputed facts and are entitled to no such weight as is accorded to a verdict or special findings of fact. He was reversed as to his conclusions by two able circuit judges. It is impossible to know the grounds of Judge Swan's dissent as he wrote no opinion. On this record the judges stand two to one for invention.

device, and, second, to make such changes as were necessary to adapt that device to its new function. With all the anticipating devices before us, it is apparent that the mere change in the shape of the dies was a minor part of the work involved in so changing the Dennis and York machine as to make it perform a wholly different function, *the invention consisting rather in the idea that such change could be made,* than in making the necessary mechanical alterations. As stated by Judge Coxe in his opinion in *Beach* v. *American Box Machine Co.,* 63 Fed. Rep. 597, 'the question is whether a mechanic before any one had thought of pasting stay strips to the corners of boxes by machinery, would construct the Beach machine after seeing the labeling machine. Would the latter suggest the idea and the embodiment of the idea? Would the thought enter the mind of the skilled mechanic with the Dennis and York device before him on his work bench; and if it did, would it not be a creative thought whose presence would convert the mechanic into an inventor?' "

In *Eibel Process Company* v. *Minnesota & Ontario Paper Company,* 261 U. S. 45, this Court sustained the Eibel patent for a paper making machine differing from the previous commercial Fourdrinier machine only in the elevation of the breast roll and wire to produce a certain pitch or angle of the wire in relation to the horizontal. No particular angle was specified in the patent but the court found that by the use of substantially the angle shown in the drawings of the patent the speed of the machine could be increased about 20% and that the industry had generally adopted that angle or pitch. The court said, at page 56:

"The fact that the Eibel pitch has thus been generally adopted in the paper-making business and that the daily product in paper making has thus been increased at least twenty per cent. over that which had been achieved before Eibel is very weighty evidence to sustain the presumption from his patent that what he discovered and invented was new and useful. Of course, although very persuasive, it is not con-

clusive and may be explained. This brings us to the consideration of the evidence of the prior art and the contention of the defendant, and the conclusion of the court below, that the step taken by Eibel, so far as he took one, was a mere obvious application of fully developed devices in the prior art."

The opinion then points out that although the breast roll had been raised to some degree in paper-making machines prior to Eibel, it was for a different purpose and was not as high as the elevation indicated in the drawings of the patent in suit. Thereupon the opinion proceeds, at page 63:

"In administering the patent law the court first looks into the art to find what the real merit of the alleged discovery or invention is and whether it has advanced the art substantially. If it has done so, then the court is liberal in its construction of the patent to secure to the inventor the reward he deserves. If what he has done works only a slight step forward and that which he says is a discovery is on the border line between mere mechanical change and real invention, then his patent, if sustained, will be given a narrow scope and infringement will be found only in approximate copies of the new device. It is this differing attitude of the courts toward genuine discoveries and slight improvements that reconciles the sometimes apparently conflicting instances of construing specifications and the finding of equivalents in alleged infringements. In the case before us, for the reasons we have already reviewed, we think that Eibel made a very useful discovery which has substantially advanced the art. His was not a pioneer patent, creating a new art; but a patent which is only an improvement on an old machine may be very meritorious and entitled to liberal treatment. Indeed, when one notes the crude working of machines of famous pioneer inventions and discoveries, and compares them with the modern machines and processes exemplifying the principle of the pioneer discovery, one hesitates in the division of credit between the original inventor and the improvers; and certainly finds no reason to withhold from the really

meritorious improver, the application of the rule '*ut res magis valeat quam pereat,*' which has been sustained in so many cases in this Court. *Winans v. Denmead,* 15 How. 338, 341; *Corning* v. *Burden,* 15 How. 265, 269; *Turrill* v. *Railroad Co.,* 1 Wall. 491, 510; *Rubber Co.* v. *Goodyear,* 9 Wall. 788, 795; *McClain* v. *Ortmayer,* 141 U. S. 419, 425."

In *Expanded Metal Company* v. *Bradford,* 214 U. S. 366, this Court sustained the Golding patent for a process of expanding metal. The opinion states at page 381:

"It is suggested that Golding's improvement, while a step forward, is nevertheless only such as a mechanic skilled in the art, with the previous inventions before him, would readily take; and that the invention is devoid of patentable novelty. It is often difficult to determine whether a given improvement is a mere mechanical advance, or the result of the exercise of the creative faculty amounting to a meritorious invention. The fact that the invention seems simple after it is made does not determine the question; if this were the rule many of the most beneficial patents would be stricken down. It may be safely said that if those skilled in the mechanical arts are working in a given field and have failed after repeated efforts to discover a certain new and useful improvement, that he who first makes the discovery has done more than make the obvious improvement which would suggest itself to a mechanic skilled in the art, and is entitled to protection as in inventor. There is nothing in the prior art that suggests the combined operation of the Golding patent in suit. It is perfectly well settled that a new combination of elements, old in themselves, but which produce a new and useful result, entitles the inventor to the protection of a patent. *Loom Company* v. *Higgins,* 105 U. S. 580-591.

"To our minds, Golding's method shows that degree of ingenuity and usefuless which raises it above an improvement obvious to a mechanic skilled in the art, and entitles it to the merit of invention. Others working in the same field had not developed it, and the prior art does not suggest the combination of operations which is the merit of Golding's invention."

In *Carnegie Steel Company* v. *Cambria Iron Company,* 185 U. S. 403, another case involving a process patent attacked as involving no invention over the prior art, this Court said, at pages 429-30:

> "It is true the Jones patent is a simple one, and in the light of present experience it seems strange that none of the expert steel makers, who approach so near the consummation of their desires, should have failed to take the final step which was needed to convert their experiments into an assured success. This, however, is but the common history of important inventions, the simplicity of which seems to the ordinary observer to preclude the possibility of their involving an exercise of the inventive faculty. The very fact that the attempt which had been made to secure a uniformity of product, seems to have been abandoned after the Jones invention came into popular notice, is strong evidence tending to show that this patent contains something which was of great value to the manufacturers of steel, and which entitled Jones to the reward due to a successful inventor."

The oft-quoted statement of this Court in *Loom Company* v. *Higgins,* 105 U. S. 580, 591, is as applicable to a process as to a combination of known mechanical elements achieving a new result. The court said at page 589:

> "Turning now to the invention claimed by Webster, * * * we find that, although it produced a great improvement in the art of weaving pile fabrics, yet, as actually exhibited in conception and accomplishment, it seems simple.
>
> * * * * * *
>
> "At this point we are constrained to say that we cannot yield our assent to the argument, that the combination of the different parts or elements for attaining the object in view was so obvious as to merit no title to invention. Now that it has succeeded, it may seem very plain to any one that he could have done it as well. This is often the case with inventions of the greatest merit. It may be laid down as a general rule, though perhaps not an invariable one, that if a new combination and arrangement of known elements produce a new and

beneficial result, never attained before, it is evidence of invention. It was certainly a new and useful result to make a loom produce fifty yards a day when it never before had produced more than forty; and we think that the combination of elements by which this was effected, even if those elements were separately known before, was invention sufficient to form the basis of a patent" (pp. 591-2).

The decision of this Court in *Seabury* v. *Am Ende*, 152 U. S. 561 (1894) is closely analogous in its facts to the question of invention presented here in respect of the adoption and combination of steps from the single film system and the double film system to produce a product better than that obtainable by the use of either system alone. The facts are sufficiently stated in the opinion (pp. 567-9):

"The next contention is, that as the plaintiffs' patented dressing was composed of materials whose specific virtues and modes of operation were well known, there was no invention shown in combining them in the manner described. It is, indeed, true that the patentee did not claim to have been the first to suggest the use of cotton fibre as a means of excluding germs from wounds or from the article to be protected. Nor did he claim to have first discovered the antiseptic qualities of boracic acid or the hygroscopic property of glycerine. *But the patentee was the first to perceive that by combining these articles, in the manner he pointed out, there would be formed a convenient and permanent dressing with the desirable qualities of the several constituents.* The complainant's evidence satisfactorily shows that, in such a dressing, the cotton acts as a screen to exclude germs and as a vehicle to hold the other ingredients; that the boracic acid possesses marked antiseptic qualities, but is liable, if used alone, to dry on the cotton and to form crystals, which impair the antiseptic qualities of the acid, and which mechanically scratch or irritate the sensitive surface of a wound; and that the glycerine, owing to its property of absorbing moisture from the atmosphere, keeps the boracic acid from hardening or crystallizing, and besides adds some-

what to the healing and preservative power of the dressing.

"The merits of the complainant's invention received immediate and widespread recognition, and the article came into use, not only to protect animal substances for alimentary purposes, but, and chiefly, to protect wounds from infection and suppuration. It was introduced into hospitals and into the private practice of physicians, and, in fact, has become a staple article for medicinal purposes.

"But it is further contended that there was no novelty in complainant's invention, because it had been anticipated by others. To sustain this contention the defendant put in evidence an article published in the American Journal of Pharmacy for November, 1871, at page 516, where it is stated that Professor Gubler, at a recent meeting of the Academy of Medicine, had exhibited some specimens of wadding prepared by saturating it with a certain quantity of glycerine, which he had found to render it permeable to all medicinal liquids, without causing it to lose any of its suppleness and lightness. Also, an article in the same journal, for March, 1867, at page 149, wherein Dr. Adolphus stated that, 'applied to suppurating surfaces which are painful and produce an ichorous pus, glycerine dressings change the abnormal condition by arresting the degenerating process, through its antiseptic and astringent properties.' The defendant likewise put in evidence a copy of The Druggists' Circular and Chemical Gazette, for June, 1875, wherein there is an account of treatment by Dr. Edmunds, in the case of an amputated thigh, by a dressing of lint steeped in a hot solution of boracic acid, with most satisfactory results in preventing putrefactive discharge.

"Undoubtedly this evidence shows that the specific qualities of glycerine and of boracic were known, and that those articles had been successfully used in the instances narrated. But we agree with the court below in thinking that 'this evidence does not disclose that any one prior to Am Ende accomplished what he has described and claimed; *that the fact that others had done something quite similar, and had used separately or in different combinations, the ingredients of*

> *his claim, should not affect his patent.* All that is described in the prior publications the defendant may use with perfect immunity. They may use "lint steeped in a hot saturated solution of boracic acid,' or 'wadding saturated with a certain quantity of glycerine,' or boracic acid dissolved in glycerine; but they should not be permitted to use cotton combined with a solution of boracic acid and glycerine in the manner described in the specification, for that belongs to Am Ende.' "

The cases cited at page 22 of the petitioner's brief have no effect to the contrary.

In *Hollister* v. *Benedict Mfg. Co.*, 113 U. S. 59, the improvement was held to be obvious. It is pointed out in the opinion (at p. 73) that the solution occurred immediately the problem arose.

In *Aron* v. *Manhattan Railway Co.*, 132 U. S. 84 and *Grinnell Washing Machine Co.* v. *Johnson Co.*, 247 U. S. 426, the devices held unpatentable were mere aggregations of old mechanisms achieving no new result or function.

The cases of *Concrete Appliances Co.* v. *Gomery*, 269 U. S. 177, and *Powers-Kennedy Contracting Corp.* v. *Concrete Mixing & Conveying Co.*, 282 U. S. 175, involved apparatus for conveying wet concrete or other plastic materials. There was held to be no invention in view of the prior art showing substantially the same methods of conveying substantially the same materials.

The decision in *Saranac Machine Corp.* v. *Wirebounds Patent Co.*, 282 U. S. 704, is no authority for the petitioner's argument. There the patent declared invalid had not given rise to any new results. On the contrary, the patent that taught the procedure for achieving the new results had expired before the decision of this Court. As to it—the expired patent—this Court said (at p. 709):

> "The new method had a large and immediate commercial success; and we assume, as the court below held, that it involved invention. See *The Barbed*

Wire Patent, 143 U. S. 275, 283; *Krementz* v. *S. Cottle Co.*, 148 U. S. 556, 560; *Minerals Separation, Ltd.* v. *Hyde*, 242 U. S. 261."

Nor is the petitioner's argument supported by the decision of this Court holding invalid the Langmuir "high vacuum" patent in *DeForest Radio Co.* v. *General Electric Co.*, 283 U. S. 664, but quite the reverse.

The Court said, at page 678:

> "That the high vacuum tube was an improvement over the low vacuum tube of great importance, is not open to doubt. *Even though the improvement was accomplished by so simple a change in structure as could be brought about by reducing the pressure in the well known low vacuum tube by a few microns, still it may be invention.*"

But the opinion proceeded to show (at p. 679) that the prior paper of Lilienfeld

> "on 'The Conduction of Electricity,' *made a complete and explicit disclosure of the essentials of all the structures and methods of the Langmuir patent.*"

and at page 680:

> "The very fact that Lilienfeld knew and described the methods of the patent for obtaining high vacuum carries with it as a necessary corollary that the device itself, apart from its functioning and use, is lacking in patentable novelty. Hence, invention, if any there be, is embraced in the discovery of the principle that discharges above ionization voltages can be produced without substantial ionization if the vacuum be sufficiently high, and the disclosure that the device of the claims constitutes suitable means for putting the principle into practice. But Lilienfeld, in his paper of 1910, disclosed that he obtained discharges free from the effects of ionization, as Langmuir testified in interference proceedings in the Patent Office, and that he accomplished this through the attainment of high vacua by the very methods later described in the Langmuir patent."

and again at page 682:

> "Arnold, who was skilled in the art, and who had made studies of electrical discharges in high vacua,

> when shown a DeForest audion for the first time on November 14, 1912, immediately recognized and said that by increasing the vacuum the discharge would be sufficiently stable and have adequate power levels to enable the tube to be employed as a relay device in transcontinental telephony. The very fact that all of significance in the Langmuir improvement was obvious to one skilled in the art as soon as he saw the unimproved tube, as the District Court said, 'lies athwart a finding of invention.' ''

In addition the court found that there had been a complete prior use of the invention by DeForest (283 U. S. 685, 686).

In the case at bar, by contrast, no one disclosed the process in suit prior to Vogt *et al.*; no one, prior to their invention, suggested that it was obvious that steps of the double film system should be combined with steps of the single film system to produce the new results; no one made prior use of the process; no one made anything approaching "a complete and explicit disclosure of the essentials of all the structure and methods" of the patent in suit.

Indeed, on the basis of the reasoning of the decision in question, the improvement involved in the process in suit may still be invention even though accomplished by means which appear to the petitioner, arguing after the fact, to be so simple.

On the authority of the decisions of this court referred to, we submit that there was patentable invention and ingenuity in solving the long-standing problem and in providing for the practical art an instrument of such outstanding utility.

III. Analogous Use.

As a further defense, the petitioner argues lack of invention on the theory that the arts of composite printing and of talking moving pictures are analogous arts and that the process of the patent in suit was used before 1921 in the composite printing art. We believe there is no merit in this theory.

Composite printing of photographs is an art that lies in but one dimension. It appeals to but one sense, the sense of sight. Its function is to create an illusion of the *unreal* by putting together two parts or images that did not exist together in either scene as photographed. It involves no special problems of photography, and no new problem whatever of development. Even as applied to moving pictures, the only problem it presents is the laborious one of piecing the unrelated parts together.

Talking motion pictures, by contrast, open up a two-dimensional world. They appeal to *two* senses, the sense of sound as well as sight—the two senses by which almost all of our outward impressions are gained. They transform the ghostly images of the silent "movies" into living, laughing, talking realties. The function of the sound and picture film is to reproduce *reality* with all the fidelity that can be vested in mere mechanism—and to achieve this function many arts beyond photography must be harnessed and correlated.

The problems met in sound-on-film are totally different from those of the silent picture. They involve sound frequencies many hundredfold more rapid than the successive exposures used in moving pictures (*supra,* p. 3). They involve entirely different mechanisms of exposure and recording. It is far from the whole truth to call sound recording on film a mere matter of photography. If it is in any sense photography it is only in a minor sense, because of the many other elements and mechanisms involved in catching the original sound waves, transforming them into electrical current variations, amplifying them and then transforming them again into light wave variations to which the film is exposed. These are elements and mechanisms that were proposed in prior patents in the sound-on-film art, but they evidence the complicating factors that faced the workers in that art. Small wonder then that the two arts of sound-on-film and composite printing saw nothing in common before 1921.

If the arts were analogous, as petitioner argues, the analogy should work both ways. Why did not Jones or Messter or Rossi or the Biograph engineer at once conceive the process in suit, equipped as they say they were with knowledge of composite printing and with the early single film system patents of Haines, etc. at their disposal?

The fact is that composite printing involves two pictures appealing to but a single sense perception; talking picture films, by contrast, involve a single picture appealing to two sense perceptions. Prior to 1921 they were in different worlds of thought and purpose. The results to which each was addressed were remote and had no suggestion of interrelation.

There is *no evidence* of any real analogy between these arts. There is cogent and persuasive and contemporary evidence that they are non-analogous and remote. That evidence is in the mute testimony of every inventor and patentee of the prior art who worked in one or other of these arts and did not look for the solution of his problem in the other art or find it there if he did look.

So for years the single film system lived in paper patents and achieved nothing; the double film system was suggested and achieved nothing. And all that is here asserted in respect of composite printing was known or available to those early workers in the sound film art, yet they failed to see in it what petitioner asserts was perfectly obvious. Certainly all those concerned with talking pictures knew that quality reproduction was the touchstone of success. If it had been obvious that the secret lay in the adoption of certain simple practices from the art of composite printing and *if it had been obvious just which of those practices should be taken over and how combined,* can it be doubted that the adoption would not have been so long delayed?

We confidently assert on the record in this case that the arts in fact are so remote that no one, viewing the question realistically as of a date in 1921 just before the in-

vention in suit was made, would see in Messter's bizarre silent movie of an orchestra conductor, or in Jones's composite pictures of skyscapes, or Downing's printed titles, or in the "Master's Dream" a solution of the defective sound film systems that had been suggested in the prior art.

Finally, we submit, that the problems in sound recording are so utterly foreign to those in picture recording that it is anything but obvious, even today, that methods of recording, development or printing that work in the case of a picture film will work to the best advantage or indeed at all in the case of a film sound record.

Certainly no composite printer is shown by this record to have used or suggested, prior to 1921, *any* process for making "a combined sound and picture film"—nor is there any evidence of an earlier composite printing process that involved the conscious steps of differential recording and differential development appropriate to the distinct requirements of sound and picture films to which the invention in suit is addressed. The process of the patent was not known even in the composite printing art.

The fallacy of petitioner's argument is in overlooking the element of invention that was involved in conceiving and being able to work out a single product so made as to appeal for the first time to two sense perceptions without offending either. That was a new result that the composite printers (including the "Master" himself) had never dreamed of, and outstanding in quality and effectiveness beyond the best suggestions in the prior art of sound-on-film.

Petitioner's argument of non-invention on the theory of analogous use finds no authority applicable to the facts of the case at bar in the decisions cited in petitioner's brief (pp. 26 and 27).

In *Brown* v. *Piper*, 91 U. S. 37, the identical freezing process, patented as applied to fish and meat, had previously been applied to freezing ice cream—without any difference in apparatus, process or results.

This Court said (at p. 41) that the process there in suit was

> "without any exercise of the inventive faculty, and *without the development of any idea which can be deemed new or original* in the sense of the patent law.".

Here, by contrast, the idea of making a unitary uncompromised sound and picture positive found no analogy in the art of composite printing and was plainly new and original.

In *Pennsylvania Railroad Company* v. *Locomotive Engine Safety Truck Company,* 110 U. S. 490, the court said at page 493:

> "The question therefore is, whether employing, as the forward truck of a locomotive engine with fixed driving wheels, a truck already in use on railroad cars, has the novelty requisite to sustain a patent."

and at page 494:

> "The effect of the invention upon the engine, as compared with its effect upon the car, is the same in kind, though perhaps less in degree.
>
> "It is settled by many decisions of this court, which it is unnecessary to quote from or refer to in detail, that the application of an old process or machine to a similar or analogous subject, *with no change in the manner of application, and no result substantially distinct in its nature,* will not sustain a patent, even if the new form of result has not before been contemplated."

In *Dreyfus* v. *Searle,* 124 U. S. 60, the alleged improvement consisted solely in applying heat to wine barrels by pipes inside the barrels rather than outside, without the slightest evidence of change in purpose or result. The decision adds nothing to petitioner's argument.

In *Concrete Appliances Company et al.* v. *Gomery et al.,* 269 U. S. 177, the patent claimed apparatus for conveying wet concrete in building construction when similar apparatus had previously been used for conveying grain, coal, crushed stone, dry concrete and other mobile substances. The court held that the question of invention is one of fact dependent upon consideration of the state

of the prior art as applied to the particular device (p. 180).

Just as a simple change may involve invention if it accomplishes new and useful results and particularly if it fills a long-felt want and constitutes an important step in achieving success, so here, we submit, the conception of a process involving specific steps, some of which may have been known in and adopted from another art, may be invention even if the arts are not widely dissimilar, where the expedients so adopted produce new and useful results long sought and helpful in turning failure into success.

IV. Commercial Success.

There is no merit in the 4th Specification of Error, for the court below did not sustain the claim of invention in the patent in suit on the basis of commercial use, but rather, as we view it, weighed the success achieved by the process after its demonstration here in 1926 against the prior failures of the art and of the Western Electric Company as cogent evidence against the argument of obviousness.

The opinion of the court below (Opinions, pp. 34, 35, R. pp. 1229, 1230) makes it quite clear that that court carefully reviewed the invention on its merits against the disclosures of all the prior patents stressed by the petitioner and reached the independent conclusion that the process in suit involved invention over those disclosures. That conclusion of a court of able and experienced patent judges should have weight here.

The facts as to commercial success in the present case do, however, definitely refute the assertion of obviousness upon which the petitioner's argument of non-invention depends.

By reason of the position which the Western Electric Company has taken in dominating the talking motion picture industry (R. pp. 322, 326) through licenses under

its patents relating to electrical devices, amplifiers, loud speakers, microphones and the like (R. p. 326), the experience of that company prior to and after the disclosure of the invention in suit to its engineers, as evidenced by the record, is eloquent on the question of invention in the patented process. That experience is three-fold and is substantially undisputed.

The first chapter of that experience relates to the years 1913 to 1923, during which important decade repeated experiments were being performed in the research laboratories of the Western Electric Company and its associated companies relative to sound-on-film. The testimony refers to experiments made in 1913, again in 1916, further experiments in 1920 and in 1923 (R. p. 312). None of them got outside of the laboratory. They were abandoned from that time till 1927.

Petitioner argues (p. 37) that it is "unbelievable on its face" that the research laboratories of the "concerns defending this suit" should have been unable to work out the film problems here involved without help from the patentees.

Let us get the facts from the record.

The 1913 and 1916 experiments concerned sound alone, no pictures. The results were not satisfactory, had no commercial value, further development work was necessary on other apparatus (Wente, R. p. 312). The 1920 experiments involved both sound and pictures. Extensive tests failed to give correct exposure (Wente, R. p. 312). In 1923 (after the issuance of the German and British patents corresponding to the patent in suit, R. pp. 960, 994) sound and pictures were taken on separate negatives and printed on separate positives (Wente, R. p. 313). Even then there was not "separate development" in the sense of the patent in suit, *i. e.*, separate kinds of developers for the picture and sound records, according to the requirements of each. All Wente could say was that because there was only one developer tray in the laboratory they used this to develop one of the negatives, then

threw this developer out and made a fresh batch of developer for the other negative. For all he knew they used the same developer formula for each (R. pp. 358, 359).

On direct-examination occurred the following (R. p. 321):

> "Q. 47. It was about 1925 that you got them both [sound and picture records] on the same positive film for the reproduction, is that it? A. That is I think about right."

But on cross-examination he told quite a different story. Thus at R. p. 356, folio 1067:

> "We, in our department *after 1923,* I don't believe ever did make any other sound pictures—"

And speaking of the time "from 1923 on" he said at R. p. 359:

> "I am not sure whether we made any more picture, sound and picture records, *I am quite positive we did not.*"

Petitioner was unable to prove either that the Western Electric Company or any of its affiliates actually carried out the process here in suit, even in their laboratories (R. pp. 356, 357), until after the Engl visit in late 1926 when the whole matter was demonstrated before their eyes.

Its argument now that it is unbelievable that those companies could not have done so if the spirit had moved them is complacent but unconvincing.

On this record, we submit that it is plain that the Western Electric experiments with sound-on-film had stalled prior to 1926 and that the court below was correct in its interpretation of the evidence.

By contrast, the Western Electric engineers who had been working since 1915 on the parallel development of sound-on-disc achieved complete success. Dr. Wente said of this at R. p. 314:

> "By 1924, these engineers felt that the quality was sufficiently good, so that they could use this system for making talking pictures with commercial success,

> *where previous attempts had failed,* and in 1925, the system was shown to the Warner Brothers, and they became interested to take out a license, and in 1926, brought out the talking pictures under the name of Vitaphone.
>
> "The first public exhibition of that was August 6, 1926."

Thus Western Electric succeeded by its own efforts in commercializing sound-on-disc but it failed in its efforts to commercialize sound-on-film.

Again petitioner argues (p. 38) that prior to 1926 there was no demand for sound pictures. And in almost the same breath shows the absurdity of its suggestion by reference not only to the abortive efforts of the Western Electric Company with sound-on-film but to its continued and finally successful efforts with sound-on-disc. Can such an argument mask the fact, demonstrated by these long years of research and scores of patents, that the art was eager to hew down the obstacles and was alive to the huge potentialities that lay in achieving successful sound with pictures?

The fact is plain that Western Electric thought it saw the reward of its labors in sound-on-disc and rejected sound-on-film.*

---

* Apparently as an obituary to these sound film efforts that terminated in 1923, Wente filed a patent application in April 1924 (R. p. 604) in which he disclosed a complicated arrangement which may afford a clue as to what he thought necessary to success in the use of sound-on-film. It involved operating the sound negative at greater speed than the picture negative and so required two separate negatives. It described the advantage of separate development and disclosed means for printing the separate sound and picture negatives on a single positive film—complicated of course by the necessity for moving the sound negative faster than the positive during the printing operation.

Prior to this application of Wente's, both the *Vogt* German patent No. 368,383 (R. p. 960) and the *Vogt* British patent No. 178,442 (R. p. 994) had issued on applications corresponding to the application for the patent

The second chapter relates to the demonstration of the process of the patent in suit to the practical engineers of the Western Electric Company in December 1926 and during the first six months of 1927. Apparatus was brought to this country by Dr. Engl, one of the patentees, and every detail of it was submitted to their examination. Mr. Otterson, president of Electrical Research Products, Inc., Mr. Drake, its vice-president, Dr. Crandall, Dr. Mackenzie and others of the Western Electric Company were called in to study the Tri-Ergon process in detail. Everything was laid open to their inspection and test (Joy, R. pp. 108-122; Drake, R. pp. 327, 328, 331; Wente, R. p. 361; Smith, R. pp. 415, 416, 424). This is not denied (see Petitioner's Brief, p. 20).

---

in suit and were undoubtedly known to the patent department of the Western Electric Company. Wente said his idea was simply to run the sound record faster than the picture record and "subsequently printing the sound record down to a slower speed on a common film with the pictures" (R. p. 371), but actually a claim was made in that application—claim 31—which is in substance a claim for the invention in issue and Wente swore at that time that he was the inventor of it (R. p. 624).

The claim was rejected on the British patent to Vogt *et al.* (R. p. 627) and on the next action was cancelled (R. p. 631). Despite his oath in 1924 Wente deposed at the trial (1931) that the process of that claim 31 was an obvious one in 1924 (R. p. 371).

If there is any significance in the incident, it is that in 1924 he saw patentability in the process which he hoped to claim for his own company, whereas in 1931 he held just the opposite view when the shoe was on the other foot.

Petitioner's Brief gives the inaccurate impression (at p. 20) that this incident was held by the court below to estop the petitioner from questioning the validity of the patent. Obviously it had no such effect for the court proceeded immediately to consider the question on its merits. As stated in *Sugar Apparatus* v. *Yaryan*, 43 Fed. 140, 143, Wente's assertions in 1924 that the subject matter here in issue was patentable may be taken, in view of his expert knowledge of the art, "as the expressions of a competent expert."

The third chapter is the chapter on commercial success in the face of powerful opposition.

By 1928 the Western Electric Company had the talking motion picture business in the hollow of its hand (R. pp. 322, 336). In its license contracts the Western Electric Company had the right to dictate the system to be used by its producer-licensees (R. p. 413). It was wedded to sound-on-disc; it had no confidence in sound-on-film (R. p. 413). The Fox Film Company, though a Western Electric licensee, preferred sound-on-film and insisted upon using it (R. pp. 413, 414). The sound-on-film pictures which it produced soon became popular because of the superior convenience and economy of sound-on-film over sound-on-disc. The use of sound-on-film grew rapidly despite the Western Electric Company's preference for sound-on-disc. By the time of the trial of this suit in 1931 sound-on-film had largely superseded sound-on-disc (R. pp. 419, 420). And it is not denied that the process of producing that film, which thus became standard in the industry, is the process of the patent in suit.

Putting these three chapters together we find that with all the prior art here of record at their disposal the Western Electric engineers had made a failure of sound-on-film until the Tri-Ergon system was disclosed to them and that thereafter over their continued opposition that system, including as an essential part the process of the patent in suit, by dint of its sheer merit, forced commercial acceptance to the point of substantially superseding all other systems.

And now the Western Electric Company attempts to defend its licensee, the petitioner herein, on the ground that the process in suit is of such commercial necessity that unless the decision below be reversed the entire industry will be under the coercion of the respondent.

V. Coercion.

On page 30 of petitioner's brief the following suggestion appears:

> "The motion picture industry should not be compelled to pay tribute to this so-called invention, every conception of which was old and the steps of which were obvious to one with any substantial knowledge of the subject."

If this is merely an assertion that the owner of an invalid patent should not be permitted to enforce it, the assertion of course would not be worth making. Taken in connection, however, with certain averments in the petition for rehearing filed in this cause, it is possible that what the petitioner is really attempting to do is subtly to influence the decision of this Court upon the validity of the patent by insinuating that an oppressive or unlawful use of it will be made if the decree of the Circuit Court of Appeals is permitted to stand. If this is intended, the Court may be depended upon to ignore the suggestion. When (as alleged in the petition for rehearing) the respondent promptly brought suit against various infringers it was merely seeking to enforce a valuable right which the Circuit Court of Appeals had vindicated and this Court had refused to question. The fact that the suits were brought in the Circuit in which the patent had been upheld should not be commented upon adversely. A decree sustaining an important patent is not a mural decoration to be framed and contemplated with silent satisfaction; it is a muniment of title which it is the right of its possessor to protect and enforce. To begin infringement suits first in the jurisdiction where one's title has been sustained is a measure of practical common sense. The fact that certain important infringers are amenable to process in that jurisdiction is in no sense a "peculiar circumstance" (as suggested in the petition) but a simple matter of fact of which the respondent properly took advantage.

And yet (again referring to the petition for rehearing) we read at page 4 the following:

> "We believe that these facts make it apparent that the respondent plans to confine this litigation to the Second Circuit in which it has received a favorable decree. The opportunities of the respondent to *coerce* the industry upon the basis of the decision of the Circuit Court of Appeals for the Second Circuit in this case are enhanced by the fact that the motion picture industry is a 'quick' industry whose business cannot tolerate delay."

This passage voices a sentiment not infrequently expressed on behalf of those dominant corporate groups who have come to confuse power with right. Even the American Telephone & Telegraph Company and its subsidiaries are within the law and must accustom themselves to its enforcement. If it were true, which it is not, that the owners of the Tri-Ergon patent were in a position to dominate the industry this circumstance would involve "coercion" in no other sense than that in which this Court "coerces" a lower tribunal by the issuance of its mandate.

Manifestly this type of "coercion", which is within the law and based upon the considered judgment of courts and upon the constitutional policy of encouraging invention, is totally different from the type of coercion which results from the domination of industry by contracts in restraint of trade. That petitioner's licensor, the Western Electric Co., in any event is scarcely in a position to cry "coercion", is evidenced by the decision of the District Court of Delaware in *Stanley Co. of America* v. *American Telephone & Telegraph Co.*, 4 Fed. Supp. 80 (1933), holding its own elaborate system of talking motion picture contracts to be illegal and void.

But the simple fact is that possession of the patent in suit carries with it no power to dominate the talking picture industry. The invention in suit is for a specific process. Within its scope it has served the public well. It has won its way to commercial acceptance in spite of powerful opposition. It is an invention that deserves the benefit of the rule "*ut res magis valeat quam pereat*",

to the end that the achievement of a meritorious improver may not be struck down at the instance of those who choose to accept the benefits of that achievement in voluntary preference to other available methods. That there *are* other available methods is beyond dispute. The successful making of talking motion pictures by the synchronized operation of sound-on-disc and sight-on-film is a process approved by the experience of the industry. The pictures and sound thus produced are of an artistic perfection at least as great as those produced by the Tri-Ergon process.

The patent asserts no monopoly of means for achieving quality results in talking motion pictures, but solely of that specific process for treating a specific sound carrier—film—which the practical art has found convenient and economical. It would be a novel proposition to assert, as petitioner appears to here, that a patent should be held invalid for the reason that it reduces the costs of those who voluntarily operate under it.

Nor is it seemly to taunt the owners of the Tri-Ergon patent with their failure up to date to secure licensees for its use. This failure is the direct result of a perverse refusal to recognize the right which the patent protects. Let the patent stand on its own merits, free from the dictates of the electrical companies, and the natural result will be that those producers and exhibitors now operating under Western Electric licenses will be given an opportunity to determine which of two equally available methods promises the greater measure of commercial success.

VI. Claims 8 and 9.

Petitioner's brief is in error in stating (p. 41) that the court below disregarded the argument that these claims were broader than the disclosure of the application as filed.

The opinion below contains the following (Opinions, p. 36, R. p. 1231):

> "After March 31, 1925, claims corresponding in scope to claims 8 and 9 in suit were asserted in the appli-

cation. There were no intervening rights of any sort established by the appellee or by the public in the interval between November 25, 1922 and March 31, 1925, nor was there any unreasonable delay on the part of the applicants in *re-asserting their invention in the broad scope justified by the original disclosure.*"

The argument is shown to be without substance by the following statement from petitioner's own brief (p. 43):

> "The original application was filed March 29, 1922 (R. 77), with four claims (R. 480), *not unlike the claims in suit.*"

The assertion that claims 8 and 9 were new claims inserted in July 1931, nine years after the application was filed and considerably after the petitioner had started to use the process (petitioner's brief p. 41) is hardly a complete statement of the facts. For from and after March 31, 1925, long before any suggestion of intervening rights of the petitioner or others, claims were re-asserted in the application (R. p. 499) which correspond in scope to claims 8 and 9 in suit.

The assertion and re-assertion of these claims in the absence of intervening rights is fully justified by the decisions of this court.

Hobbs v. *Beach,* 180 U. S. 383, 395;
Overland v. *Packard,* 274 U. S. 417, 421.

and see

Wirebounds Patents Co. et al. v. *Saranac Automatic Mach. Corp.* 37 Fed. (2d) 830 (C. C. A. 6, 1930) where the court said, at p. 840:

> "Applicants then cancelled these claims. This was rather plainly a mistake, as the Patent Office later decided when it approved similar claims; *but, mistake or not, this action by applicants was, of course, subject to reconsideration and disavowal by them at any time during the progress of the application, before other rights had intervened. It was an abandonment only until they should change their minds and reclaim.*"

The cases cited at page 41 of the petitioner's brief have no pertinence. Here there were no intervening rights prior to the assertion of the subject matter of the claims. The claims involve no change of theory or assertion of a new action or effect. The original specification and claims clearly disclosed recording on separate negatives as well as on a single negative. Differential recording is an important part of the invention, and is entitled to be protected in combination with the printing of the resulting differential sound and picture records on a single positive film.

Neither claim is anticipated by Greensfelder or the composite printing process. Both claims are limited to the photographing of sound and pictures simultaneously on separate films. Neither of the references disclose simultaneous recording or the problems it gives rise to in the talking motion picture art. Greensfelder has no disclosure of photographing sound in the sense of the process in suit. Composite printing has no relation to sound of any sort.

In the absence either of anticipation or of intervening rights, we submit that there is no merit in the attack on these claims.

VII. Disclaimer.

Petitioner's brief refers to an argument to be made respecting the validity of a different disclaimer in a different case involving a different patent and a wholly different record, and asserts that it will "leave the point" as to validity of the disclaimer in the case at bar "to abide the conclusion in the other case" (Petitioner's brief, p. 42).

There is no assertion that the cases are on all fours. The validity or invalidity of the disclaimer here in suit must depend solely on the facts here of record; it cannot depend upon the facts in another case.

Here the disclaimer (R. p. 472) relates to and affects only claims 6 and 7. It imports into them explicitly the

requirement of separate development which had been implicit in both claims even before the disclaimer.

Each claim, as issued, recited the simultaneous recording step on separate films,

> "so that the picture and sound negatives may be separately developed in a manner appropriate for each" (R. p. 469).

The disclaimer simply emphasizes what was already an implicit limitation in the claims and the principal feature of the process to which the patent is addressed.

The disclaimer is entirely proper in avoiding any possibility of doubt as to the scope and limitation of the claims.

Minerals Separations, Ltd. v. *Butte*, 250 U. S. 336.

Conclusion.

The important electrical links in the chain of mechanisms necessary for recording and reproducing sound-on-film were known prior to 1921; microphones were highly developed in telephone practice; amplifiers were old with the Lowenstein invention of 1912;* the general idea of using electricity to transform sound vibrations into light vibrations for recording on film and conversely for reproducing from the film record into sound was disclosed in patents such as Haines, MacCarty, etc. Yet prior to 1921 there was not so much as one inch of sound film in commercial use.

The Tri-Ergon inventors were ingenious in putting their fingers on the links of sensitive weakness in the chain, where distortion factors of critical importance lay, and in pointing out the means by which the chain at those points could be forged of full strength and efficiency.

In the process in suit they taught the art effective means for avoiding distortion in the treatment of the negative films and the production of the positive. In the patent

* *Western Electric Co.* v. *Wallerstein*, 60 Fed. (2d) 723, 724.

in suit in the companion cases, Nos. 255 and 256, they taught the art effective means for avoiding distortion in the translation of the sound to and from the film by light.

The evidence of the practical art shows plainly that these links are indispensable to the chain—if sound-on-film be chosen over sound-on-disc.

Of what materiality would it be, if true, as charged by the petitioner (Brief, p. 3), that the patent owner has not benefited financially from the invention—

> "has taken no part in the motion picture industry, either by production of motion pictures, furnishing of equipment or granting of licenses."

The reason for it is obvious in the face of the opposing monopoly of the Western Electric Company and its affiliates. Indeed, the success of the *invention* under such circumstances is the significant thing; and that success is the more significant in the light of the respondent's position.

As was well said by the Circuit Court of Appeals, (Opinions, p. 33, R. p. 1228):

> "The commercial use of the patented process is fullsome testimony of its inventive worth. *The result of testing it by the inquiry, as it should be, of what has been the commercial success of the invention rather than the appellant's commercial success, adds greatly to its validity.*"

In the language of the *Grant Tire* case (*supra*, p. 11): The petitioner uses the Vogt process.

> "It gives the tribute of its praise to the prior art; it gives the [Vogt process] the tribute of its imitation as others have done."

Reviewing the record as a whole, we submit that the following propositions are by it fully sustained:

First, that there is no evidence of anticipation or prior use of the process covered by the patent in suit.

Second, that while the process in question now seems simple and is easily understood, it required at the time inventive imagination to identify the precise difficulties

to be met, to conceive the means of overcoming them and to evolve a process which accomplished the result to the satisfaction of the industry.

Third, that the attempt to find an analogue in the field of composite photography is an attempt that lacks even plausibility, in view of the essential difference between the problem of combining picture with picture and the problem of combining picture with sound.

Fourth, that the Circuit Court of Appeals did not deduce patentability from the commercial success of the process in suit but justifiably regarded such success as refuting the supposition of obviousness and as indicating the futility of the efforts of Western Electric to achieve success with sound-on-film.

Fifth, that the suggestion of "coercion" of the industry by the respondent is baseless in view of the fact that the patent is not one that gives its owner a power to monopolize the talking picture industry since it relates to but one means of achieving the desired result where other tried and available means of accomplishing results just as good in quality are ready at hand for those who do not choose to use the present invention.

The simple question before this Court is whether the Circuit Court of Appeals erred in deciding that the patent should stand. We respectfully submit that the decree appealed from was legally sound, essentially fair and commercially wholesome. We earnestly urge its final affirmance.

Respectfully submitted,

GEORGE WHARTON PEPPER,
THEODORE S. KENYON,
Counsel for Respondent.

THOMAS D. THACHER,
S. MORTIMER WARD, JR.,
Of Counsel.

January, 1935.

1098—E

9

FILE COPY

FEB 2 1

Supreme Court of the United States

OCTOBER TERM.

No. 254.

PARAMOUNT PUBLIX CORPORATION,
Petitioner,

vs.

AMERICAN TRI-ERGON CORPORATION,
Respondent.

TRANSLATIONS OF DECISIONS OF GERMAN COURTS RELATING TO GERMAN PATENT NO. 368,383 CORRESPONDING TO VOGT, ET AL., UNITED STATES PATENT NO. 1,825,598.

Submitted on Behalf of Respondent.

GEORGE WHARTON PEPPER,
THEODORE S. KENYON,
of Counsel.

GALLO & ACKERMAN, Inc., 143 Liberty Street, Telephones—Rector 2-5856-7

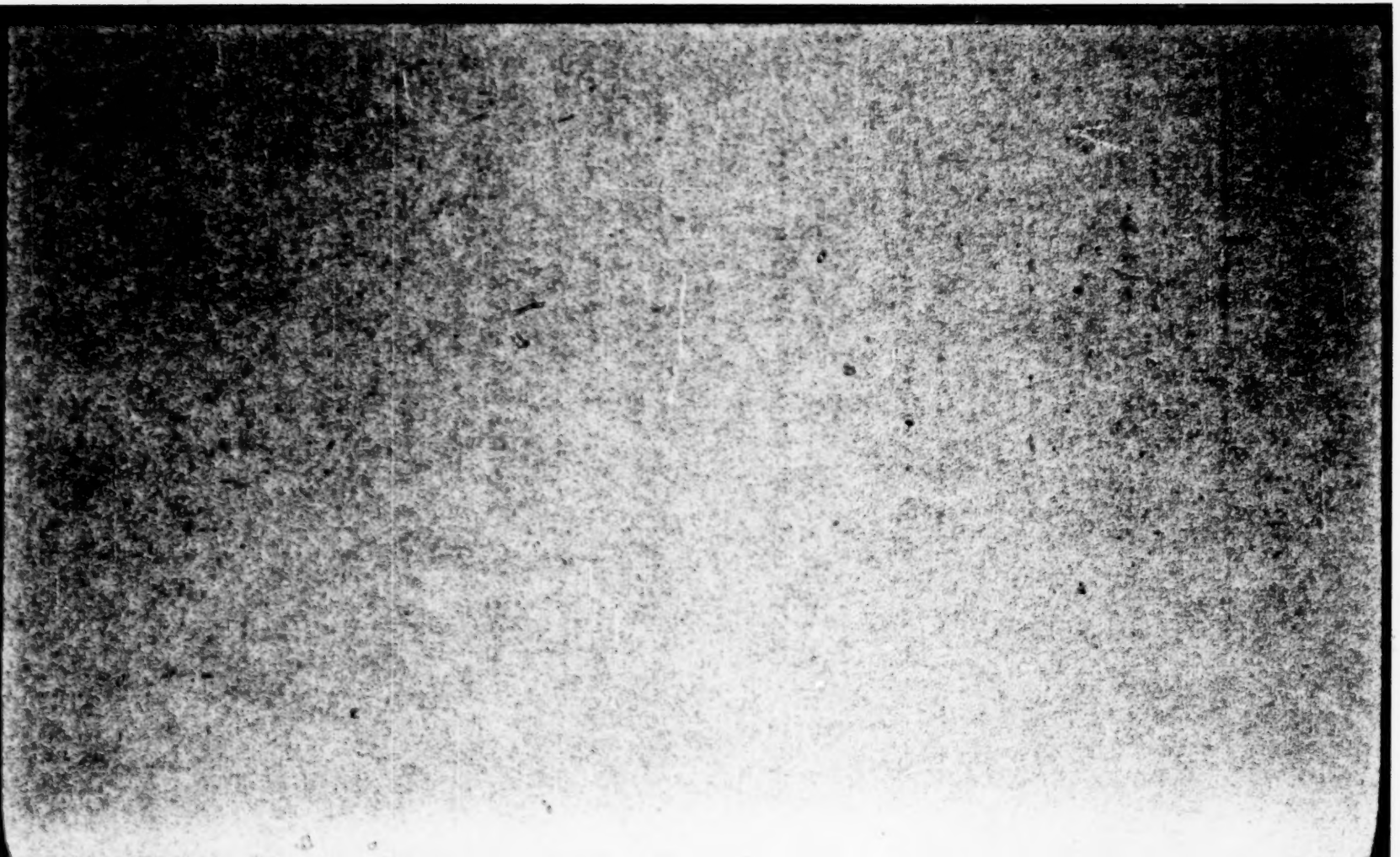

DECISION OF THE BERLIN DISTRICT COURT.

Translations by
GRENVILLE MEIXEL
Librarian of the Applied
Science Library of
Columbia University

216 b. O. 182.33

In the name of the people!

Pronounced
on June 16, 1933
Signed, Nemitz, Justizsekretar
as Clerk of the Court.

In re

1.) The firm of Naturfilm Hubert Schonger, Berlin, S. W. 11, Anhalter Strasse 7

2.) The Aktiengesellschaft für Filmfabrication, represented by the members of its board of directors Kurt Waschneck and Alfred Günthel, Berlin-Tempelhof, Victoria Strasse, No. 13/18.

Plaintiffs.

Counsels: Justizrat Johannes Homeyer and Dr. Günther Donner, advocates of Berlin, W. 8, Mohrenstrasse 48.

versus

the Tobis Tonbildsyndikat Aktiengesellschaft, represented by its director (Vorstand) Dr. Hans Henkel, Berlin, W. 8, Mauerstrasse 43.

Defendant.

Counsels: Dr. Danziger and Dr. Nünninghoff, Berlin, W. 35, Margaretenstrasse 8, for infringement of a patent

Civil Chamber 16 b of the District Court I of Berlin (Landgericht I) on the oral hearing of June 2, 1933, under the participation of Landsgerichtsdirektor Lindhorst, Landsgerichtsrat Dr. Wichards and Gerichtsassessor Andrée judged according to the law:

The complaint is dismissed.

The plaintiffs bear the costs of the proceedings.

The decision is provisionally admitted to execution against security of 3,000 R.M.

Facts of the Case.

The defendant* is the exclusive holder of a license under D R P 368,383, granted to take effect April 15, 1921, concerning a process for producing films with picture sequences and photographed recording of sound [sound sequence] of which the patent claims are as follows:

1.) Process for producing positive films comprising picture sequences and photographically-recorded sound sequences, characterized by the fact that the negatives are developed separately.

2.) Process according to claim 1, characterized by the fact that the photographs of the series of sounds [sound sequences] and the series of pictures [picture sequences] are effected on a single film which is afterwards separated.

---

*For clarity in this decision and in the following decisions we will sometimes indicate in brackets the "Defendant" as the *patent owner*, the "Plaintiff ad 1)" as the *film producer* and the "Plaintiff ad 2)" as the *film laboratory*.

3.) Process according to claim 1, characterized by the fact that the negatives, after treatment, are combined one with the other longitudinally.

The plaintiffs ad 1) produce and sell combined sound and picture films. In particular they produced in the autumn of 1932 a sound motion picture "Deutsche Sinfonie", which was produced in the first place as a silent film and later had sounds added and explicitly by the following process: For the necessary sound records a Kodak positive sound film was used. The sound records were treated by a special developing method for about 4 minutes in a special developer. Then the negatives of the picture strips which had been previously produced and developed at the time in the usual manner in a time from 2-10 minutes, were printed with the negative of the sound, on a single positive film by means of a printing machine. The printing was effected by the plaintiff ad 2) who generally develops sound and picture films, in which the sound and picture recordings are effected on separate strips of film.

The defendant obtained under the date of December 10, 1932, a provisional [temporary] injunction against the plaintiffs ad 1) [film producer] (216 ^{b} Q 93.32 of the District Court I) to this effect:

> The parties against whom the motion is made are, until a decision by the lower Court in the principal action, against a security of 25,000 R. M., forbidden to produce or cause to be produced positive films, comprising picture sequences or photographically-recorded sound sequences, in which the negatives are separately developed, and in which the negatives after treatmen[t] are combined longitudinally, more

especially by composite printing on a single positive film

or,

to place on the market, offer for sale, especially sell or let out, positive films so produced.

The provisional injunction was maintained by a decision of January 21, 1933, of the District Court I. In the Court of Appeal, the parties to the arrangement compromised to the effect that the party bringing the motion [applicants] while preserving its legal status, waived the rights under the provisional injunction.

The Defendant [patent owner] had further demanded that Plaintiffs ad 2) should cease the development and printing of films produced on a certain apparatus here in question.

[The Plaintiffs' Assertions.]

The plaintiffs assert, that the defendant wrongfully charges them of an infringement of the protection rights of D R P 368,383. The protection of this patent does not cover a process for the production of positive films with picture sequences and photographically-recorded sound sequences, the sounds and pictures of which are produced on separate strips of film and certainly not also a process for the separate development of such strips of film or the composite printing of both negatives on a single positive film. The protection of the patent restricts itself only to the cases of recording of sound and picture jointly on one and the same strip of film. Accordingly the subsequent synchronization of silent motion pictures does not come under the patent. This limitation appears both from the records of the granting of the patent [granting proceedings] and the state of the art at the time of the patent application.

When the patent in suit was applied for, four claims had been announced [notified] and under number 2) one to this effect.

"Process for producing combined sound and picture films according to claim 1 (i. e. separate developing of negative films) characterized by the fact that the sound sequences and picture sequences are recorded on separate films."

This claim had been cancelled by the Patent Office with reference to the previously known patent D R P 279,598.* The Patent Office had thereby expressed that in the case of separate recordings, not only this recording separately, but also the developing and composite printing was not to come under the patent. Thus the German Patent Office had here explicitly refused something which the defendant now claims as protected.

The state of the art, too, required these limitations. Since the beginning of the art of sound recording, it was known how to combine picture and sound subsequently. No difficulties of a technical nature had stood in the way of the subsequent combination of two negatives on one positive film.

By *D R P 279,598** the problem of the combination of sound and picture while maintaining synchronism had been solved, and had been solved by the combination of photographic picture film with a mechanically-recorded sound-film.

In the *American patent 1,260,337* of Craig the instruction had been given to undertake the recordings (picture and sound) by means of different rays, not interfering with each other, and corresponding emulsions on two coatings overlying each other, on the whole width of the picture film. For sound and picture separate negatives had been utilized, which were printed on a single positive.

---

*Reimer.

In the *American patent 1,335,651* of Bullis the same rules were to be found as in D R P no. 368,383 in so far as the recording of sound and picture on separate films is concerned. Picture and sound, however, had been recorded at the same time and with the same device but on separate and different films. The exposed films had been developed and treated separately. By means of a printing strip [ribbon] running between the two films during recording, identification marks had been placed on the edges of the films, which made possible the subsequent exact running side by side or cementing together of the films. Here, as a matter of fact, no printing together of the two negatives on a common positive film occurred, but in the claims of patent 368,383 also, not a word is said about printing together. Claim 3) mentioned only a *combination* of the negatives. Moreover the idea of printing together two negatives had already frequently been applied in the so-called "photo-fitting" [Photomontage]. After all this, the invention protected by the patent in suit could be found solely in the instruction to record sound and pictures on the same strip of film, this strip of film, however, to be cut apart afterwards for the purpose of separate further treatment of the sound and picture photographs.

The plaintiffs [film producer and laboratory] assert that they suffered a great loss through the proceeding of the defendant [patent owner]. Thereby the presentation as a sound picture of the film, "Deutsche Sinfonie", which had already had a particularly great success as a silent picture, but which in consideration of the equipment of the motion picture theatres could not be shown on a larger scale as a silent film, was made impossible.

The plaintiffs move:

1) to establish, that each of the plaintiffs is entitled to commercially produce or to cause to be commercially produced, positive films, which comprise picture sequences

and photographically recorded sound sequences, and in which the sound recordings and the picture recordings have been made on separate strips of film, that positive films produced by developing the negatives separately and producing therefrom by consecutive printing a single positive film comprising sounds and pictures, may be produced or that positive films produced in this manner may be placed on the market, offered for sale, or especially sold or let:

2) only plaintiff ad 1) [film producer]—

to order the defendant to pay to plaintiff ad 1) 2,000 R.M.

3) to impose on the defendant the costs of the proceedings.

4) to declare the decision provisionally executory—possibly against security.

Auxiliarily the plaintiff ad 1) moves:

To establish, that he has the right to produce or cause to be produced commercially positive films, which comprise picture sequences and photographically recorded sound sequences, and in which the recording of the picture sequence takes place before the recording of the sound, and what is more on a separate strip of film from that on which the sound is made, that positive films produced by developing the negatives separately and producing therefrom by consecutive printing a single positive film comprising sounds and pictures, may be produced, or that positive films produced in this manner may be placed on the market, offered for sale, or especially sold or let.

The defendant [patent owner] moves:

to dismiss the claim.

He holds that the plaintiffs have infringed Patent 368,383, because individual separate treatment of the separately recorded strips of film and the subsequent combination thereof on a positive film comes under the patent. The patent in suit was concerned especially with the subsequent synchronization here under consideration. Sentence 7) of the description of the patent states explicitly: "The recording can hereby be effected either on two films or on one, which shall be separated before development."

Regarding the further presentations of the parties reference is made to the written proceedings. Copies of the granting proceedings of Patent 368,383, the patent D R P 279,598, the American patents 1,260,337 and 1,335,651, as well as the decision passed by this court, 216 [b]. O. 583.32 of District Court I, Tobis v. Macho of January 31, 1933, were submitted and were the subject of the oral hearing.

Reasons for the Decision.

The claim could not be complied with either as regards the application primarily preferred for a general declaratory judgment and the application for the judgment of payment of damages, or as regards the auxiliary application for a limited declaratory judgment.

Patent specification No. 368,383 in lines 1-7 of the description proceeds from the fact that in the production of speaking films, in which the sound is also recorded in a photographic manner, it is of great advantage, especially for the reasons of practical operation, to arrange the sound recordings and the picture sequences on one single carrier (film). It is then further explained that owing to the changing conditions of light in the cinematographic process frequent differences occur in the degree of exposure of the silver bromide coating, and moreover in such a manner that the picture sequences become either over- or under-exposed, and that these differences cannot

be adjusted in the combined negatives by developing, weakening, intensifying, etc., because the same film carries close to the picture sequence the always normally-exposed sound sequence. The inventor had, therefore, set himself the problem of creating a positive film capable of projection which after individual treatment of the picture and sound negatives, combines on itself the picture and sound sequences. This problem the inventor solved by developing the picture and sound negatives separately and after that combining both on the same positive film strip. The recording can hereby according to the statement of the applicant be done either on two films or on one, which, however, then must be separated before development. It is further stated that the production of the positive film may be accomplished by printing the two negative films preferably one after the other on the same positive film; but the negative films may also be cemented together longitudinally previously and the combined negative thus obtained printed as usual.

Accordingly the protection of the patent no. 368,383 in so far as its claim 1) is taken into consideration, covers a process for the production of positive films of the usual type, which, however, comprise picture sequences as well as the photographically-recorded sound sequences, and consists in the fact that the negatives are developed separately, but are printed after their completion on a single film strip.

The plaintiffs [film producer and laboratory] protest this view because claim no. 1) speaks only of the development of the negatives and that it accordingly can cover the negatives only. That is false. For apart from the fact that claim no. 1) specifies the *positive* film with picture sequences and sound sequences as the subject of the invention, and that furthermore according to the above-presented train of thought of the description of the invention, the *necessity* of treating the picture and sound negatives separately was considered as an *obstacle*

in the way of the combined sound and picture positive, and that the inventor teaches to still develop the negatives separately, etc., but then to print them on one and the same positive film, the perhaps not very happily couched wording of claim 1) means nothing else for the specialist except just this precept, viz.—read backward—the instruction to produce positives by printing on the same positive film, the separately recorded and finished sound and picture negatives.

The interpretation of the plaintiffs that the patent in suit with all its claims covered solely one particular negative process, is accordingly irreconcilable with the wording and meaning of the patent specifications.

Incorrect also is the view of the plaintiffs that the German Patent Office had explicitly refused to the inventor what the defendant to-day claims to be protected. It is true that the German Patent Office held that a claim to a combined sound and picture film characterized by the fact that the recording of the sound sequences and picture sequences ensued separately, was not grantable. This claim set out sub 2) had to be abandoned because it was practically identical with claim 1): in no case could the characteristic features of the recording of sound sequences and picture sequences on separate films as put forward in the former claim 2) be considered any innovation as compared with the feature of the separate development of the negatives as stated in claim 1). That the German Patent Office had, however, not intended a refusal of protection for a part of the application, follows unmistakably from the fact that the German Patent Office, after the suppression of the original claim sub 2), expressly added to the description the self-evident fact contained therein, viz., the fact that "the recording may be effected either on two films or on one film, which, however, shall be separated before development" in order to avoid any misunderstandings, that is to say, in order to establish that the protection of the patent was by no means limited to the use of a single negative to be cut into parts after recording.

Hence it follows that the contents of the files of the granting proceedings are in no way opposed to the view of the patent in suit rendered above.

Nor does the patent specification mention with a single word when the picture sequences and when the sound sequences shall be recorded. Also no limitation or waiver on the part of the inventor perhaps to the effect that only *simultaneously*-recorded picture and sound sequences were to be covered by the patent, appears from the files of the granting proceedings either. For the solution [of the problem] of the patent in suit it is indeed of no importance whether the pictures are recorded simultaneously with or prior to the production of the sound. Hence it follows at the same time that not only simultaneously-recorded picture and sound sequences are covered by the patent in suit, but also every other production of a combined picture and sound film, if after all, the teaching of the patent in suit is utilized.

As regards the state of the art, it also does not result in the limitation of the extent of the protection of the patent as desired by the plaintiffs [film producer and laboratory], as this court has already repeatedly laid down in similar law suits, the subject of which was the patent in suit, inter alia 216[b].0.583/32.

The *patent specification 279,598** disclosed no photographically-produced sound strips (film). On the contrary, a *recording disc* or *cylinder* was used for sound production. This prior publication cannot be prejudicial to the novelty [of the invention] on account of the very difference of the means used for producing sound.

In the *American patent specification 1,260,337*, a method for the production of sound films is described by the inventor Craig. Craig, however, did not use the now usual method of printing the sound sequence on the edge of the picture. He proposed, on the contrary, to print the sound

---

*Reimer.

on a special gelatine coating (film) applied either over the photographic picture coating or on the back of the film and *completely covering over* the picture. There were therefore two coatings, the celluloid coating [or layer] and the gelatine coating, one over the other. On account of this difference and of the impracticable solution of allowing picture and sound recordings to overlay one another, this patent specification must be completely eliminated in evaluating the patent in suit.

In the *American patent specification 1,335,651** the inventor has likewise set himself the problem of applying the necessary individual treatment for developing the picture record and the sound record and has found the solution of recording picture and sound on separate films and inserting between them a printing strip of opaque material, but with transparent places, which covers the contiguous inner edges of both films and during recording imprints identifying marks on the edges. These identifying marks appear then at intervals along the edges of the films and make it possible to subsequently reunite the two films without difficulty at the position prepared for synchronous reproduction of pictures and sound. According to the statements of the patent specification, the two films are then developed separately and printed on *two different positive films*, which are then with the aid of the identifying marks joined together for reproduction and run in the projecting apparatus *side by side* as two films. It is therefore manifest that no importance prejudicial to novelty can be attached to this prior publication either. It is true, the prior publication already contains the idea of the separate development of the films for their best possible production and describes a means of placing the films during reproduction in the correct position to one another to achieve complete synchronization. But it does not attain the achievements of the patent in suit, since the latter

*Bullis.

has for its subject not only the separate treatment of the negatives, but beyond that the uniting of the negatives on a single positive film of the normal kind, attaining this end according to the description of the patent in suit by consecutive or simultaneous printing, after cementing together of the negative films, on a single positive film.

The view of the defendant [plaintiffs?] that in consideration of the prior publications it had been a matter of course to print the two negatives side by side on a common positive film is erroneous. For, if that were true, it would be impossible to understand why the art in order to achieve this end should have chosen as complicated methods as those shown in the prior publications. It is just this state of the art referred to by the defendant which shows that the idea of the patent in suit, which now seems so self-evident, was far-removed and has to be estimated as an invention.

It is hereby established that the applicant for the patent in suit was the first to propose to record picture and sound either together or separately and to develop them separately in a manner so adapted as to avoid under- and over-exposures such as will occur, but then to print them on a single normal film, it being of no importance whether picture and sound are produced simultaneously or the latter after the former. Accordingly, the protective limits of the protection claim 1) extend to such a process for the production of positive films and at the same time to the positive films so produced.

The plaintiffs have not disputed the fact that the production of the "Deutsche Sinfonie" now provided with an accompaniment of sounds proceeded from separate picture and sound records. While the picture records were treated for some 2-10 minutes in an ordinary developer, the sound material was developed during a special development period of 4 minutes with the help of a special developing method for sound records by means of a special

developer. The negatives were then combined side by side in a single positive film on a normal film strip.

This Chamber accordingly finds it proved that the plaintiffs [film producer and laboratory] by the subsequent synchronization of the sound film "Deutsche Sinfonie", have legally infringed the patent in suit. Accordingly, the provisional injunction obtained by the defendant [patent owner] against the plaintiff ad 1), the purpose of which was indisputably to prevent further infringement of the patent through the production of the film "Deutsche Sinfonie", was rightful. Also the warnings pronounced against the plaintiff ad 2) were rightful.

Hence follows the dismissal of the claim.

The secondary decisions are based on Art. 91, 710 ZPO.

Signed. LINDHORST WICHARDS ANDRÉE

Prepared.
Signed. TOBIEN Justizsekretär
as Clerk of the District Court I.

Seal of the Prussian District Court I Berlin.

The foregoing signature of Justizsekretar Tobien as Clerk of the Court of the District Court, Berlin, is herewith certified.

The Clerk is entitled to certify the copy.

Berlin, December 28, 1934.

The president of the District Court
represented by
Gardiewski.

(Seal of
The President of the District Court,
Berlin.)

American Consular Service.

German Reich,
Province of Brandenburg,
Consulate General of the United States of America
at Berlin. } ss.:

I, Prescott Childs, Consul of the United States of America at Berlin, German Reich, duly commissioned and qualified, do hereby certify that

Gardiewski

whose true signature and official seal are, respectively, subscribed and affixed to the foregoing instrument, was at the time of subscribing same an official of the Prussian

Landgericht at Berlin of the .....

German Reich, duly commissioned and by law authorized to execute such acts, and that his signature and official seal affixed thereto are genuine, and as such are entitled to full faith and credit.

IN WITNESS WHEREOF I have hereunto set my hand and the seal of the Consulate General at Berlin, German Reich, this 28th day of December 1934.

PRESCOTT CHILDS
Consul of the United States of America.

SEAL

AMERICAN CONSULATE GENERAL
AMERICAN
Foreign Service
$2.00
Dec. 28 1934
FEE STAMP
BERLIN, GERMANY

For the contents of the annexed document the Consulate General assumes no responsibility.

DECISION OF THE KAMMERGERICHT.

The following reference number should be used in all communications.

Reference number:

10 U. 4774.33
16 b. o. 182.33

Pronounced on February 10, 1934.
sgd. Konetzkow, Court employee,
as Clerk of the Court.

In the name of the German people!

In re

1) The firm of Naturfilm Robert Schonger, of Berlin, SW. 11, Anhalterstrasse 7,

2) The Aktiengesellschaft für Film Fabrikation, of Berlin-Tempelhof, Victoriastrasse 13-18, by its directors Kurt Waschneck and Alfred Günthel, of the same place,

Plaintiffs and Appellants,

Counsel: Dr. von Boehmer, advocate of Berlin, SW. 19, Krausenstrasse 38-39,

1) the "Tobis" Tonbild-syndikat Aktiengesellschaft of Berlin, W. 8, Mauerstrasse 43, represented by its director, Dr. Hans Henkel, of the same place

Defendants and Appellees

Counsels: Dr. H. Isay, Dr. R. Isay, and Dr. E. Reimer, advocates, of Berlin, W. 62, Maienstrasse 2,

2) the Klangfilm G. m. b. H., of Berlin SW. 11, Askanischer Platz 4, represented by its managers, Dr. Rottgardt and Schwab, of the same place,

Co-interveners and Appellees,

Counsel: Dr. Sarre, advocate of Berlin-Wilmersdorf, Nikolsburger Platz 2,

the 10th Civil Senate of the Kammersgericht of Berlin, Senatspresident Natorp and Kammergerichtsräte Kusch and Dr. Schumann presiding, upon the oral hearing of January 27, 1934, decided:

The plaintiffs' [film producer's and laboratory's] appeal against the decision of the 16 b Civil Chamber of the District Court I of Berlin is dismissed.

The Appellants must bear the costs of the appeal, including the costs incurred by the co-intervention.

The decision is provisionally executory; however, the plaintiffs shall be released from averting the execution on account of the costs by furnishing security of 4,000 Reichsmark, provided that the defendant or the co-intervenor shall not on their part furnish security to the specified amount before the execution. The security of either party or the co-intervenor may be effected through the surety of that amount to their account at a large German bank.

Facts of the Case.

The defendant is in the possession of the exclusive license under German patent 368,383, granted effective as of April 15, 1931, concerning a process for producing films with picture sequences and photographed sound sequences. With respect to this patent reference is made to the contents presented [in court] and the official records of the German Patent Office concerning the granting of this patent.

The plaintiff ad 1) is engaged in the production and sale of combined sound picture films, whereas the plaintiff ad 2) develops and prints sound picture films. The plaintiff ad 1) brought out in the autumn of 1932 a sound and picture film "Deutsche Sinfonie", which had been brought

out in the first place as a silent film and had been shown at the "Capitol" and had then been converted into a sound film by subsequent synchronization. The defendant under 216 b. Q. 93.32 of the District Court I of Berlin obtained a provisional [interim] injunction against the plaintiff ad 1) as of December 10, 1932, by which the plaintiff ad 1) is forbidden until a decision on the principal action by the lower court to produce or cause to be produced positive films, comprising picture sequences and photographically-recorded sound sequences in which the negatives are developed separately and the negatives, after treatment, are combined one with the other longitudinaliy, in particular by printing together on a single positive film, the possibility of execution of the provisional injunction being made dependent meanwhile on the previous provision of a security of 25,000 Reichsmark. Upon a protest by the plaintiff ad 1) [film producer], this provisional [interim] injunction was maintained by a decision pronounced January 21, 1933, by the 16 b Civil Chamber of the District Court I, of Berlin. After the defendant [patent owner], in the court of appeals, waived his rights as against the plaintiff ad 1) under the interim injunction, the said interim injunction as against the plaintiff ad 1) was reversed by the decision of the senate pronounced on May 17, 1933. With respect to these proceedings concerning the remission of a temporary injunction reference is made to the contents of the files 216 b. Q. 93.32 of the Ditsriet Court, Berlin, the subject of which is the oral hearing.

The plaintiff ad 2) [film laboratory], the largest German printing establishment, is engaged in the separate development of sound and picture films, which were recorded separately, and in the composite printing of such negatives on a single positive film containing sound and picture. The developing and printing work is carried on by the plaintiff ad 2) not only for the Universum-Film-Aktiengesellschaft, but also for the plaintiff ad 1) and other companies, and also from films produced by apparatus other than "Klang-film". In

his letter of December 20, 1932, the defendant, referring to the "license agreement concluded" between them, called the attention of the plaintiff ad 2) to the fact that the sound picture film recording apparatus of the firms of Mecho Mechanisch-Optische Werkstätten, G. m. b. H. Berlin, Friess Aktiengesellschaft Berlin, and Arnold and Richter, Munich, may not be considered as admissible apparatus within the meaning of this license agreement, and request the plaintiff ad 2) not to perform developing or printing work with the afore-mentioned apparatus.

The plaintiffs have brought suit against the defendant [with the plea] requesting the court:

> to establish that each of the plaintiffs is entitled to commercially produce or cause to be commercially produced, positive films which comprise picture sequences and photographically-recorded sound sequences and in which the sound recording and picture recording have been made on separate strips of film, by developing the negatives separately and producing from them by consecutive printing a single positive film containing sound and picture, or that positive films so produced may be placed on the market, offered for sale, or especially sold or let.

The plaintiff ad 1) has requested the court in addition to order the defendant to pay him a sum of 20,000 Reichsmark.

and auxiliarily

> to establish that he has the right to commercially produce or to cause to be commercially produced, positive films which contain picture sequences and photographically-recorded sound sequences, and in which the recording of the pictures takes place before the recording of the sound and what is more on a separate strip of

film from that on which the sound is recorded, by developing the negatives separately and producing from them, by consecutive printing, a single positive film comprising sound and picture, or that positive films produced in this manner may be placed on the market, offered for sale, or especially sold or let out.

In substantiation of this plea, they claimed that the defendants charged them wrongfully with an infringement of Patent 368,383, since the protection of the patent is limited to cases of the *joint* recording of sound and picture on one and the same strip of film, and thus particularly does not include the subsequent synchronization of silent films. They claimed, furthermore, that they suffered great losses through the action of the defendant. The plaintiff ad 1) has estimated the loss entailed by the action of the defendant through the prohibition to exploit commercially the sound film "Deutsche Sinfonie", as a multiple of the partial amount of 20,000 Reichsmark claimed by him.

The defendant has petitioned a dismissal of the suit. He holds the opinion that the plaintiffs had infringed Patent 368,383, because any entirely separate treatment of the separately-recorded film strips and subsequent combination of them on a positive film is covered by the patent, therefore in particular the subsequent synchronization effected by the plaintiffs is protected by the patent.

By the decision of June 16, 1933, the 16 b Civil Chamber of the District Court I of Berlin, decided:

The complaint is dismissed.

The Plaintiffs bear the costs of the proceedings.

Reference is made to the contents of this decision presented [in Court] and to the allegations and arguments of the parties and documents referred to therein.

Against the decision served on them, through their Counsel on July 4, 1933, by the lower Court, the Plaintiffs by their written pleadings dated June 16, 1933, and received

by the Court of Appeals on June 17, 1933, lodged an appeal and substantiated their appeal in these same written pleadings. The Plaintiffs have furnished proof that the court fees required for the proceedings before the Court of Appeals have been paid by them within the time specified by the presiding judge.

The Plaintiffs requested [the Court]:

by amendment of the disputed decision,

1) to establish, that each of the Plaintiffs is entitled to commercially produce or cause to be commercially produced, positive films containing picture sequences and photographically-recorded sound sequences, of which the sound recording and the picture recording are effected on separate strips of film, by developing the negatives separately and producing from these negatives, which remain separated, by simultaneous printing, or by, as regards either space or time, consecutive printing on a single positive film containing sound and picture, or to commercially place on the market, offer for sale, or especially sell or let out, positive films so produced;

the Plaintiff ad 1) only in place of request ad 1) auxiliarily: to establish, that the Plaintiff ad 1) is entitled to commercially produce or to cause to be commercially produced positive films which contain picture sequences and photographically-recorded sound sequences and in which the picture recording is separated as regards time from the sound recording and is effected, moreover, on a different strip of film from that on which the sound recording is later effected, by developing the negatives separately and producing from these negatives, which remain separated, by simultaneous printing or by, as regards either space or time, consecutive printing on a single positive film containing sound and picture, or to commercially place on the market, offer for sale, or especially sell or let out positive films so produced,

2) to order the Defendant to pay 20,000 Reichsmark to the Plaintiff ad 1),

furthermore both Plaintiffs:

3) to impose the costs of the proceedings on the Defendant,

4) to declare the decision provisionally executory—possibly against security,

5) to reserve to the Plaintiff the right of deposit.

In support of their appeal, the Plaintiffs have repeated their arguments presented in the lower Court, and, in addition, presented the contents of their written pleadings of October 7, 11, 12, 14, 16 and 25, November 2 and 14, 1933, and January 19, 23, 25 and 26, 1934, and the exhibits attached to the said written pleadings and referred to therein, to which reference is made.

The Defendant requested [the Court],

to dismiss the appeal, with costs, and to declare the decision provisionally executory, in case of the decision against them, to remit the execution against furnishing of a security (bank surety).

He has offered to furnish security (bank surety) in accordance with Article 713, II 2 PO.

The Defendant has likewise repeated his arguments presented in the lower Court and in addition presented the contents of the written pleadings of October 4, 17, 20, November 7, 1933, and January 19, 23 and 27, 1934, and the exhibits attached to the said written pleadings and referred to therein, to which reference is made.

The Klangfilm G. m. b. H. of Berlin SW. 11, joined the Defendant as co-intervenor. It supported his applications and arguments in full and in addition presented the contents of its written pleadings of January 26, 1934, and the exhibit attached thereto, to which reference is made.

In support of its legal interest in the success of the Defendant, it stated that it was in possession of a license on Patent 368,383.

The Plaintiffs have not objected to the admission of the co-intervener.

The files of the law suit Electrical Research v. Tobis—33. O. 109/29 of the District Court I of Berlin were presented and made the subject of an oral hearing.

The parties and the co-intervener argued the case. The Defendant requested to be allowed a fixed time, if need be, for submitting an answer to the Plaintiffs' written pleading of January 26, 1934, first made available to them at the hearing of January 27, 1934.

Reasons for the Decision.

The Plaintiffs appeal, filed in due time and form and duly substantiated, could not be successful. For the decision contested in this appeal was approved in its final result and essentially also in its argument [motivation].

No objections can be made to the admission of the co-intervener, as none of the parties protested the admission of the co-intervener and requested its rejection.

The District Court rightfully dismissed the claim as completely unfounded. The claim of both Plaintiffs endeavors to establish that they do not infringe Patent 368,383 by specific acts [operations], the Plaintiff ad 1) also claims damages. The assumptions of the statement of complaint within the meaning of the instructions of Article 256 ZPO may be accepted as given, without hesitation. This the Defendant has not denied as regards the Plaintiff ad 1). But the Plaintiff ad 2) has a special legal interest also in the statement in respect to the letter addressed to him by the Defendant as of December 20, 1932. The Plaintiff bases his claim for damages on the fact that the Defendant, under Patent 368,383, by obtaining the provisional injunc-

tion, made impossible the exploitation of the sound film "Deutsche Sinfonie" and thereby caused a loss exceeding 20,000 Reichsmark. The judgment of the claims depended, therefore, first of all upon the decision on the questions of the extent of protection of Patent 368,383 and whether the acts described by the Plaintiffs and designated by the Defendant as infringement of the Patent 368,383, infringe upon the protection of the patent.

The Patent 368,383, granted effective as of April 15, 1921, and on which the Defendant has unquestionably an exclusive license, concerns, according to the superscription of the patent specification, a process for producing films with picture sequences and photographed sound sequences. In the description of the patent specification, the process is described as follows:

> In the production of speaking films in which the sound is also recorded in a photographic manner, it is of great advantage, especially for reasons of practical operation, to arrange the sound recordings and the picture sequences on a single carrier of uniform material (film). It is then further explained that due to the changing conditions of light in the cinematographic process, frequent differences occur in the degree of exposure of the silver bromide coating, and, moreover, in such a manner that the picture sequences are either over- or under-exposed. But as the same film carries close to the picture sequences the always normally-exposed sound sequence, it is not possible in the case of combined negatives to adjust these differences by developing, weakening, intensifying, etc. They can be corrected only by a separate and individual treatment to the over- or under-exposed negatives. Technically this is as good as impossible as long as the two sequences are on the same film.
>
> In consequence of the invention, this difficulty is eliminated by effecting the development of the nega-

tives separately. The recording may be done either on two films or on one, which, however, shall be divided before the developing. The synchronization is secured in both cases by the perforations and corresponding marks.

The production of the positive film may be accomplished by printing the two negative films, preferably one after the other, on the same positive film. The two negative films may also be cemented longitudinally previously and the combined negative thus obtained printed as usual.

At the conclusion of the patent specification, the inventive idea of the Patent 368,383 is summed up in three patent claims:

1) Process for producing positive films which contain picture sequences and photographically-recorded sound sequences, characterized by the fact that the negatives are developed separately.

2) Process according to claim 1) characterized by the fact that the sound sequences and picture sequences are effected on a single film, which is afterwards separated.

3) Process according to claim 1) characterized by the fact that the negatives, after treatment, are combined one with the other longitudinally.

On the basis of claim 1) of this patent, the Defendant claims protection, as against the Plaintiffs, for the process of producing a positive film, constituting a unit, comprising in the usual way picture sequences and photographically-recorded sound sequences side by side, in such a way that the negatives recorded either on two films or on a single film are developed separately and after that printed on the same positive film.

In opposition thereto, the Plaintiffs assert that the protection of the patent, taking into consideration the interests of the patent specification, the course of the granting proceedings and the state of the art at the time of the application for the patent, should be limited to the process of recording sound and picture as a unit and the separation of the recording films before the developing and the separate developing of the two film strips. The District Court rightfully judged the Defendant's interpretation of the patent as correct.

Contrary to the assertions of the Plaintiffs, the aforementioned contents of Patent 368,383 are not opposed to this interpretation. When the Plaintiffs take from the patent specification as the problem of the invention, the combination of the advantage of the recording of sound and picture on a recording film constituting a unit and the advantage of individual treatment of sound and picture despite the recording as a unit, and, as solution of this problem, solely the proposition of separating the negative, produced as a unit, before developing, and subsequently developing the negatives separately, they (the Plaintiffs) do not do justice to the contents of patent specification 368,383.

In so doing, they leave completely out of consideration [the fact] that in the principal claim the subject of the invention is expressly designated as a "Method for the production of positive films, comprising picture sequences and photographically-recorded sound sequences," and that also, according to the sentence contained in lines 26, et seq., of the description, the recording of sound and picture as a unit on a single film does not constitute an essential feature of the invention; that the recording, on the contrary, "may be done either on two films or on one, which, however, shall be separated before developing." They also further overlook the fact that, as was correctly pointed out by the District Court in their interpretation of the patent, the principal claim is completely conformable with

the patent claim 2) because exactly the process of recording sound and picture on a negative that is afterwards separated, forms literally the subject of patent claim 2). The Plaintiffs' attempt also, in their limited interpretation of the Patent 368,383, to refute the correctness of this view of the complete conformity of the two patent claims 1) and 2), is in vain. For their appeal on the fact that a separate developing can be effected in spite of recording as a unit and without previous separation of the recording films, for example, by varnishing the sound strips while the pictures are being developed in accordance with the method described in the German patent specification 577,614, or by not immersing the sound strips in the developing liquid and thus keeping them undeveloped, they leave out of account that the first-named proposition concerns a process disclosed originally a considerable time after the filing of the application for Patent 368,383, and that the second proposition involves difficulties so considerable that it cannot be considered as practicable [practically useful]. Moreover, it cannot be brought into agreement with the statements in the description of patent specification 368,383, which in lines 21 seq. expressly emphasizes that as long as the two sequences are on the same film, the separate developing is "technically" . . . "as good as impossible". Thus it is clearly stated in patent specification 368,383 that a separate development, despite recording as a unit, likewise without preliminary separation of the recording film, is completely eliminated as regards the process following Patent 368,383. Therefore the attempt of the plaintiffs to prove the correctness of their limiting interpretation of the patent, based on the patent specification 368,383 alone, must fail on account of the contents of the patent specification.

On the contrary, an unbiased perusal of patent specification 368,383 with an appreciation of the entire contents, will show that the task which the inventor of the patent had set himself was the production of a positive film, as

a unit, which contains in the usual manner on the same carrier (film), one beside the other, picture sequences and sound sequences, wherein the sound is photographically-recorded. As to the solution of this problem, it is stated in the patent specification that the positive film, constituting a unit, is achieved by preparing on the one hand a picture negative and on the other hand a sound negative by separate development, and that the separate negatives are printed on a common positive film in such a way that the sound sequences and picture sequences lie side by side on the positive film. If the Plaintiffs miss a statement in the patent specification that picture and sound must be printed from two separate negatives side by side on the same side of a picture-sound print, constituting a unit, it is to be acknowledged that they are right in that the term "side by side" is not used in the patent specification. Nevertheless, the statements in the patent specification leave no doubt in the matter that the inventor, in the process described by them, aimed at the production of a positive film, which contained in the usual manner picture sequences and photographically-recorded sound sequences, side by side, on the same carrier (film). This is shown unmistakably from the first sentence of the description, of which the Plaintiffs themselves have reported, that it refers to the recording film as well as the positive film, for, if it is stated here that the sound sequence and the picture sequence are recorded on a single carrier (film) of uniform material, this can only mean as regards the recording film that the sound sequence and the picture sequence are recorded side by side on the negative film, which is, moreover, expressly confirmed for the recording film in the third sentence of the description. It follows from this forthwith that in this connection, also as regards the positive film, no other arrangement of sound and picture but that in which they are printed side by side can be considered. This appears with particular clearness from the last paragraph of the description. For it is there definitely stated

that the printing of the two negative films on the same positive film is carried out "preferably one after the other" [consecutively]. It is to be taken from that, that the printing itself, although perhaps less preferably, may be effected simultaneously, which, however, presumes a printing of picture and sound side by side on the same face of a positive film. In the proposal of the last sentence of the description, which forms the subject of patent claim 3), the printing side by side of picture and sound on the same side of the positive film, does not come into dispute, as the Plaintiffs themselves do not deny. Furthermore, the Plaintiffs wrongfully complain that the patent specification 368,383, with the exception of the suggestion for combining the negatives after treatment one with the other longitudinally, contained in patent claim 3), which is not of interest for the present lawsuit, contains no instructions as to the method of printing, and draw therefrom the conclusion that the inventor of the patent had looked upon the printing of two negatives, one representing the picture and the other the sound, on a common positive film, as a known method. As against this, it is pointed out that in the sentence last but one of the description it is explicitly proposed to print the two negative films one after the other on the same positive film. Apart from this, however, the Plaintiffs overlook the fact that the inventor of the Patent 368,383 attached particular importance to the direction to print the negatives, of the picture sequences and the photographically-recorded sound [sequences], produced by separate individual developing, side by side on a single positive film. It is finally also rightfully pointed out by the District Court that patent specification 368,383 does not mention with a single word when the picture and when the sound strips (films) should be recorded and that for this reason a limitation of the patent specification to the effect that a simultaneous recording of picture and sound strips (films) is an essential requirement of the inventor, cannot be inferred. In so far as patent claim no. 1) of

Patent 368,383 comes into consideration, the three instructions may be taken from the patent specification as solutions of the problem characterized above:

1) With simultaneous recording of sound and picture on a common negative, the negatives of the picture sequence and the sound sequence should be separated one from the other, both parts being given separate individual development, and after that printed side by side on a common positive film.

2) With separate recording of the picture sequence on one negative and the sound sequence on another negative, the two negatives, in so far as they are not yet developed, should be given separate individual development and after that, printed side by side on a common positive film.

3) If a completely developed negative of the picture sequence already exists, and a negative of the sound sequence is recorded supplementally, then the negative of the sound sequence should be developed by itself and after that the negative of the picture sequence and the negative of the sound sequence printed side by side on a common positive film.

When the Plaintiffs plead, over against this, that the patent specification merely mentions difficulties, the overcoming of which was the purpose of the first-mentioned instruction, it must also be pointed out that according to the sentence, lines 26 seq. of the patent specification, the recording of picture sequence and of sound sequence may also be effected on two films.

The District Court was right also in not inferring from the granting proceedings of Patent 368,383 the necessity of the limiting interpretation of the patent desired by the Plaintiffs, because no explicit limitations or unequivocal waivers can be established in the granting proceedings.

The originally-presented application contained in addition to the three claims adopted with trifling amendments in the patent specification 368,383, the following further claim as patent claim 2):

> Process for producing combined sound and picture films according to claim 1), characterized by the fact that the recording of the sound sequences and the picture sequences is effected on separate films,

while the following sentence stood in place of the first two sentences of paragraph 2 of the patent specification:

> According to the invention, this difficulty is eliminated by providing for the production of the negatives either on completely separate films, or, on films which although united during the recording are separated one from the other before developing.

In his decree [order] of May 27, 1923, the [preliminary] first examiner informed the applicants: "It is in itself known, that sound sequences and picture sequences can be recorded separately and both sequences combined for the first time later, compare P. S. 279,598,* K142g. Claim 2) appears therefore not grantable. Publication is contemplated if the applicants are agreeable to the enclosed documents, which are returnable." By the amendments of the documents thus proposed by the first examiner, the application was given the wording adopted in the patent specification. To these amendments the applicants agreed in their presentation of June 15, 1921, whereupon there ensued without further changes the publication of the application and the granting of Patent 368,383. This course of the granting proceedings, as opposed to the assertion of the Plaintiffs, is not to be considered as an explicit limitation

---

*Reimer.

to a protection covering only the solution mentioned above ad 1) or as an explicit waiver of the protection of the solutions characterized above ad 2) and 3), which according to regular jurisdiction must be considered alone in the interpretation of a patent. The alleged contradiction in the attitude of the first examiner, which the Plaintiffs find in the fact that the first examiner, notwithstanding the cancellation of the original patent claim 2), gave to sentence 2) of the second paragraph of the description of the patent specification the wording adopted in it (i. e. patent claim 2) according to which the recording may also take place on two films, finds its explanation when it is considered that patent specification 279,598, referred to by the first examiner, does not disclose a sound strip (film) produced by way of photography, but contains solely the proposal to use a disc or cylinder for the production of sound, and that, as was rightfully pointed out by District Court I, the original second patent claim was practically identical with patent claim 1) and contained no new features whatever as compared with claim 1). For under these circumstances, if the original claim 2) was maintained, there was always the danger that it might give rise to an interpretation opposed to the real state of the art. Thus there is nothing in the course of the granting proceedings on which the Plaintiffs might successfully rely for their interpretation of Patent 368,383.

Nor has the discussion of the state of the art at the time of the filing of the application for Patent 368,383 produced the result desired by the Plaintiffs. For in evaluating the state of the art, according to the principles laid down by the Reichsgericht [Supreme Court] in its decision of January 3, 1934—I. 140./33—the limitations of the extent of the protection, which the Plaintiffs deem necessary, cannot be recognized as justified.

From the printed documents already considered by the District Court in respect to the state of the art at the time

of the filing of the application for Patent 368,383, viz., the German patent specification 279,598* and the American patent specification 1,260,337 of Craig and 1,335,651 of Bullis, the District Court has rightfully eliminated the German patent specification 279,598, which, as mentioned above, had already been considered in the granting proceedings. This patent specification concerns a process for the production of a film, consisting of a picture strip (ribbon) and a sound strip, each strip to be produced separately as a separate strip and both ribbons to be then combined one with the other. According to it, the sound strip is obtained mechanically by forming [moulding] it from a record disc or cylinder and combining it with the picture strip in a manner not fully described in the patent specification. This prior publication, as the District Court correctly stated, is not prejudicial to the novelty, because the process described in it does not concern a photographically-recorded sound sequence. The Plaintiffs have not attempted to refute the correctness of this evaluation of the German patent specification 279,598. All the more emphatically have they protested against the judgment of the District Court on the two American patents. In addition, they have quoted as further printed documents on the state of the art at the time of the application for Patent 368,383, the American patent specification 1,254,684 (Greensfelder) and 1,286,383 (Messter), the abridgment of the British patent specification 157,751, the British patent specifications 6727/1913 (Downing) and 123,842 (Flower), the French patent specifications 448,757 and 459,537, as well as the publication in the periodical "Die Kinotechnik", Verlag, Richard Falk, Berlin, W. 66, Liepziger Strasse 115/116, year 2, no. 2, page 60 (February, 1920) and the German patent specification 317,269 reviewed there, and further point out that at all times in the development of picture films, the individual scenes had been treated individually

---

*Reimer.

according to the degree of exposure, and that it had already been known at the time of the filing of the application for the Patent 368,383, in the case of picture films, and more especially in the case of trick films, how to produce the positive in such a way that the two negatives were printed on a positive film while one part or the other of the positive film was covered. As regards the contention of the Plaintiffs as to the obvious prior use of the developing and printing processes described by him, the Defendant does not deny its correctness. But in respect to these known processes, the Defendant has rightfully pointed out that they solely concern the developing and printing of picture films, whereas the Patent 368,383 deals exclusively with sound-picture films, comprising picture sequences and photographically-recorded sound sequences side by side on a single positive film.

Such sound-picture films, likewise, are not dealt with in the American patent specifications 1,254,684 and 1,286,383, the British patent specifications 6727/1913 and 123,842, nor in the publication in "Kinotechnik" and German patent specification 317,269, although all these printed documents in contrast with the German patent specification dealt with above, concern purely photographic processes.

In the American patent specification 1,254,684 of Greensfelder, a process is described in which two separately recorded negatives are printed together on a common positive film. But according to this patent specification, individual "sound marks" are produced instead of sound sequences accompanying the pictures, which "sound marks" are arranged between the pictures on the so-called "slide line" [Schieberstrich]. The sound marks just as the sound sequences serve to produce or check electric currents at the illumination of the positive. They differ from these, however, in that they are not used as the sound sequences are for the direct production of sound waves, but for electric relays for the mechanical operation of music or sound instruments. The possibility of a continu-

ous accompaniment of the picture films by speech or sound is not provided for and is not obtainable for the reason that the sound marks are not arranged beside the picture sequences, but between the individual pictures. As for the rest, the Plaintiffs have rightfully pointed out that in this patent specification on page 3, line 122, to page 4, line 8, it is specified:

> The "sound marks" corresponding to the sounds and expressions produced, are recorded on the film of the camera 28, it being understood that this camera is operated at precisely the same speed as that at which the picture projection machine was operated. A developed negative containing the rows of "sound marks", but on which the spaces for pictures are blank, is now, fitting accurately, superimposed on a developed negative which contains photographed pictures, but having free space for the sound marks, and a print is made from this combined negative, which gives a positive containing the pictures 4 and the corresponding rows of sound marks 3, as shown in figure 3.

Picture sequences and sound sequences arranged side by side are accordingly not achieved by the process disclosed in the American patent specification 1,254,684.

In the American patent specification 1,286,383 of Messter, a process for printing together two picture negatives is described as follows on page 1, lines 73-83:

> A film is made for each cinematograph and is passed across in a horizontal direction. The pictures recorded on it take up half the width of the film, as shown in figs. 2 and 3. Two series of pictures, A and B, will thus be obtained, which are then so printed by a well-known process, that a film having two adjacent series of pictures, A and B, results, as shown in fig. 4.

Accordingly in this patent specification, the production of a picture film pure and simple is described.

In the British patent specification 6727/1913 of Downing a process is described for printing together on a positive film constituting a unit, two negatives, one of which contains picture sequences and the other writing. The patent claim is correctly described by the Plaintiffs as follows:

> Improvements in cinematographic apparatus and recording, consisting in this, that two films or the like, on which pictures or fitting explanatory or other words are recorded, one single film being produced containing the said pictures and words in proper order, so that when the pictures are projected on a screen by the usual lantern, the words appropriate to the pictures are simultaneously projected on the screen, as described.

Also in the British patent specification 123,842 of Flower, the composite printing of a negative containing writing with a picture negative is described. Accordingly these two patent specifications do not concern with the production of a sound-picture film.

The same applies also to the German patent specification 317,269 of Bolten-Baeckers and to the review thereof in the number of "Kinotechnik". The patent specification concerns a process and a mechanism [device] for achieving the simultaneity of a cinematographic presentation and the musical accompaniment thereof. The invention of the Patent 317,299 is described in the "Kinotechnik", as follows (with an illustration):

> It is accomplished simultaneously by means of two positively-coupled recording apparatuses, one of which (I) is directed toward the scene, the other (II) toward the orchestra. In the picture-recording aperture of apparatus I, an insert is introduced that covers field

d and in that of apparatus II, an insert which leaves only this field uncovered. The size of this field is so adjusted that on the film of II only the conductor standing near c appears. Instead of the inserts, a black disc of suitable size and shape may be fitted before the scene near d and a corresponding partition in front of the orchestra, with a small opening allowing only the conductor to be visible. The negatives are combined according to one of the known methods through printing on a common positive. The invention may also be used for the combination of such cinematograms, the individual parts of which, for some reason, cannot be recorded by a single apparatus.

There is no mention of a photographically-recorded sound sequence either in the German patent specification 317,299 or in the review thereof in the "Kinotechnik".

The other printed documents cited by the Plaintiffs with respect to the state of the art at the time of the filing of the application for the Patent 368,383, on the contrary, concern sound-picture films with photographically-recorded sound sequences. Among these printed documents, the two French patent specifications 448,757 and 459,537 disclose the process from which Patent 368,383 proceeds in the introduction of its description. For according to these French patent specifications, the positive film constituting a unit which contains side by side the picture sequence and the photographically-recorded sound sequence, is produced in such a way that the picture sequences and sound sequences are already combined with each other during recording on a common negative film and are printed from this negative film, after development of the same, on the single positive film.

In divergence from these French patent specifications, the American patent specification 1,335,651 of Bullis describes the separate recording and treatment of two negatives, one of which contains the picture sequence and the

other the photographically-recorded sound sequence, and explicitly points out the advantages of this method. In this American patent it is stated on page 1, lines 99 seq.:

> In carrying the present invention, picture and sound recordings are effected simultaneously and with the same apparatus, but on separate and distinct films. It has been previously proposed to work on the same film, but the objection to this is that the manipulation and development, by which one obtains the best sound reproduction, differs widely from that which gives the best picture reproduction. If both recordings are effected on the same film with the same emulsion, it is clear that a proper manipulation and development of one record can be obtained only at the expense of the other, since both records require special types of development, which are generally quite different one from the other. Hence there are very important practical reasons why the two records cannot be successfully and satisfactorily recorded on the same film, as previously proposed. The object of the present invention is to overcome this difficulty through a construction which permits the recording of both records on different films with different emulsions and individual treatment in the development in order to achieve the best results. The two independent negatives receive during the production process corresponding marks by means of which they can be easily combined in the manner necessary for a synchronous reproduction of picture and sound.

From the two negatives so obtained, two positives are made, according to the American patent specification of Bullis, which are projected synchronously and are arranged, during the projection, on the conveyor drum of the projector with an edge of each lying over the other, so that the perforation holes of one side overlap. Accord-

ing to the proposition of this patent specification, their combination may also be effected by conglutination, for it is stated on page 4, lines 60 seq.:

> The overlapping edges may be cemented together, so that in effect a single film results.

Accordingly this American patent specification of Bullis provides, as the Defendant has correctly argued, recording on two separate negatives and separate development thereof. It does not, however, print these negatives on a common positive film, but produces two independent positives, which at best are combined one with the other mechanically in such a way that they are arranged side by side, overlapping each other in the longitudinal direction. Thus the idea of the composite printing of separate sound and picture negatives on the same positive film is not mentioned in this American specification.

This idea is materialized in the American patent specification 1,260,337 of Craig in the process described in this patent specification. In fig. 3 of this patent specification and in its description, it is shown that sound and picture are recorded simultaneously on individual negatives (page 2, lines 43-45; page 3, line 128, to page 4, line 6; page 4, line 113, to page 5, line 35; and page 7, lines 85 to 97, of the American patent specification 1,260,337). On page 4, line 114, of the patent specification, it states:

> It is understood from the preceding that up to the present, sound and picture negatives have been produced on separate strips of film. These two negatives must, therefore, be photographically printed on a single film or on opposite sides thereof.

As Professor Dr. Lehmann, the expert in the preceding lawsuit, Electrical Research v. Tobis, correctly stated in his written opinion of April 27, 1930, which formed the subject matter of the oral hearing, it is the essence of

Craig's invention that the sound print is not composed of silver, but of an invisible substance transparent to visible light and absorbing heat rays only. The sound print can therefore overlay the picture, without being visible, and operates when heat rays, which operate on a thermopile or similar apparatus sensitive to heat, pass through it. Practically the sound print lies on a special gelatine coating, either over the photographic picture coating or upon the back of the film. Craig, as the above-mentioned expert correctly states, says in the patent specification that he invented a film admitting of the synchronous production of pictures and sounds with the ordinary projection apparatus, sound and picture being recorded and reproduced simultaneously, without the possibility of a disarrangement of the synchronism. Furthermore, sound and picture may also be reproduced separately. The operation is extremely simple. Picture and sound overlay one another, without interfering one with the other, and are both photographically-recorded and reproduced. The American patent specification does not enter into the particulars of prior sound-recording processes, rather merely the advantages of the process here described as against the synchronization with record discs are emphasized. The expert, Professor Dr. Lehmann, as appears from the aforementioned written opinion, considers the production of sound sequences having the capacity mentioned in the American patent specification of complete transparency to visible light, a problem unsolved to this day. The Plaintiffs, on the contrary, hold the opinion that the process can be carried out practically throughout, since owing to the special qualities of Craig's sound recordings with the employment of infra-red rays, no interference with the projection of the picture occurs, despite the fact that sound and picture overlay one another, and for the question of practical usability, rely on the opinion of an expert. However, the hearing of an expert on this question was not required. For, quite apart from the fact that according to the propositions of the Ameri-

can patent specification 1,260,337, a positive film containing picture sequences and photographically-recorded sound sequences can only be reproduced in an extraordinarily complicated manner and that this film, when coated on face and back, is exceptionally liable to damage, the positive film in question is not a positive film within the meaning of Patent 368,383, in which picture sequences and photographically-recorded sound sequences are arranged side by side on the same side of a single positive film. The Plaintiffs' view, that Craig set himself the task of avoiding the disadvantages proceeding from printing side by side, that the normal film strip must be made wider or the picture narrower in order to produce the sound sequence on the positive film, finds no basis in the American patent specification, as already stated above, and is, therefore, a pure supposition.

Finally as regards the British patent specification 157,751 quoted by the Plaintiffs with regard to the state of the art at the time of the filing of the application for the Patent 368,383, the parties are agreed, that the description of the British was published originally after the date of the application for the patent 368,383 and, therefore, must not be considered in the examination of the state of the art, and, therefore, the abridgment only should be considered.

This abridgment runs in translation:

> Relates to combined Kinematographic and photographic systems, in which a moving picture or the like is accompanied by the reproduction of appropriate words or other sounds, and more particularly to systems in which the sound record is made on a film by optical means. According to the invention, the source(s) from which the recorded sounds emanate do not form part of the original scenes or other subjects photographed. The sound-record may be produced whilst the picture record is being made, and for this

purpose, the sound film is arranged on a drum which is positively coupled to the feed mechanism of the picture film, so as to synchronize therewith. The sources of sound which produce the record are arranged outside of the field of the objective lens of the Kinematograph. Instead of this procedure, scenes may be Kinematographed separately and the sound record produced afterwards, whilst the picture is being reproduced on the screen, in such a way that both records are in accordance. Both records may, if desired, be produced on one film. According to another method, a sound record may be made by assembling separately-produced items appropriate to the subject of a picture film into one series. Corresponding identification marks are provided at intervals on the two correlated films.

From this abridgment the Plaintiffs gather the idea of the composite printing of a negative containing the picture sequences and a negative containing the sound sequences on a single positive film. They find there described just the method of full synchronization (simultaneous recording) of sound and picture, and then the method of subsequent synchronization (consecutive recording of sound and picture) and wish to construe the sentence "Both records may, if desired, be produced on one film", as relating to both methods, but in particular to the method of subsequent synchronization, according to which the picture negative is produced first and the sound negative only subsequently, and wish to interpret it as meaning that from the two negatives (records) one single positive film may be produced. For confirmation of the correctness of their interpretation, they present page 2, lines 13 seq. of the British patent specification 157,751, which states:

The further treatment of the picture film after recording has taken place is in both cases the usual one as

> regards the printing process, reproduction, etc. When the companion film had the same speed of feed as the picture film in its recording, the two series of incidents may be printed for convenience in reproduction as in printing on one film.

and on claim 5) of this patent, which runs:

> Photophonetic companion film according to claim 1) characterized by the fact that the series of photograms of the picture and companion films are printed on one film.

The Defendant rightfully pleads as against this, that it is not permissible to interpret the abridgment on the basis of the patent specification published originally after the date of the application for the Patent 368,383. In their opinion, the invention, which this abstract describes, consists in the idea of having the sounds which accompany the pictures emanate from a source of sound, which is not photographed with them, in order to create in this way the possibility of having the picture part of the talking film and the sound part produced by different actors. As he sees it, the abstract presents two methods of achieving this: Either the sound film may be recorded simultaneously with the picture series, in which case the sources of sound are arranged outside of the picture angle [range] of the cinematograph. Or it is possible, also, to produce picture sequence and sound sequence consecutively, but in such a way that they are in accordance with one another. These two possibilities the Defendant finds exemplified by corresponding photographic methods in next following sentences, where it is first said that picture and sound may be produced on the same film, and afterwards specified that according to another method the sound sequences may be produced separately and only combined with the picture sequences when reproduced. Accordingly, they construe

the possibility of producing both records on one film, as relating to the case of simultaneous production of picture sequence and sound sequence, and the second possibility, inversely as relating to the case of consecutive production of picture sequence and sound sequence, provided with "identification marks" for the purpose of joint production. For the correctness of this interpretation, the Defendant cites in particular the fact that the word "produce" in the sentences immediately preceding the sentence "Both records may, if desired, be produced on one film" is used three times in the sense of the production of the negatives, whereas it is not used elsewhere in the abstract in the sense of the production of a positive. The expert, Dr. Tappan, employed by the Plaintiffs ad 1), in his opinion of December 31, 1932, submitted by the Plaintiffs ad 1) in the proceedings concerning the remission of the provisional injunction—216 b. Q. 93,32—had first interpreted the abovementioned sentence in conformity with the view of the Defendant, that the word "produced" had reference to the records and not to the print, emphasizing that this interpretation was given "without any consideration of the patent specification" 157,751 "itself" and could not be maintained after a consideration of this patent specification. Afterwards, in a letter of October 9, 1933, directed to the Universum-Film A. G., he characterized this interpretation of the word "produce" as wrong and adopted in this respect the interpretation of the abridgment given to it by the Plaintiffs, referring to his defective knowledge of the English language. The Plaintiffs pleaded, in addition, that an English technical expert by them, who knew only the abridgment and not the complete text of the British patent specification 157,751, had understood the said sentence of the abridgment in the sense that both records might be combined on a single film, after they had first been produced separately. Even assuming the correctness of this contention of the Plaintiffs, it does not in any way prove that the abridgment is absolutely unequivocal in the mean-

ing given by the Plaintiffs. In consideration of all the facts in the case, the Senate reached the conclusion that the abridgment, when read without bias, for an expert, knowing neither the British patent specification 157,751 nor the patent specification 368,383, did not at the time of the filing of the application for patent 368,383, viz., April 14, 1921, disclose the idea of the composite printing of two separate negatives on one positive film so unequivocally that he could recognize it clearly from this abridgment.

The publication of an invention, however, may be considered as having been made only if the printed specification describes the instruction forming the subject matter of the invention so clearly and distinctly that the expert can gather it therefrom without further ado. (c. f. Isay. Patentgesitz, 6th edition, note 4 ad article 2). Since according to the conviction of the Senate, the abridgment from the British Patent 157,751 admits of the interpretation of the Plaintiffs as well as that of the Defendant, the abridgment must be left out of account in so far as the Plaintiffs conclude therefrom the publication of the idea inferring the composite printing of two separate negatives on one positive film. The result of this discussion of the state of the art at the time of the filing of the application for the Patent 368,383 is accordingly that the three instructions herein derived from the patent specification for the solution of the problem set out herein before and disclosed in the patent specification, had not yet been published at the time of the filing of the application for the Patent 368,383, according to the state of the art within the meaning of article 2 of the Patent Act. For the Plaintiffs have proved as known only the following ideas:

1) When using a single negative, which contains picture sequences and photographically-recorded sound sequences side by side, to print the same without separate development of the picture sequences and the sound sequences, on one positive film,

2) when using separately recorded and developed negatives to produce a single positive film in such a way that—

a) the mechanically-produced sound sequences are impressed along (side) the picture sequences,

b) several picture sequences are printed into one another, over one another, or side by side on the same film,

c) the picture sequences are combined with writing,

d) several cinematograms are combined with each other,

e) sound marks are printed between the picture sequences,

f) the positive of the picture sequences and the positive of the sound sequences are cemented,

g) picture sequences and photographically-recorded sound sequences are printed over one another, or the picture sequences on the face and the sound sequences on the back of a film.

The instructions derived hereinbefore from the patent specification 368,383 to produce a positive film constituting a unit, which contains on the same carrier, side by side, picture sequences and photographically-recorded sound sequences in such a way that

in simultaneous recording of sound and picture on a common negative, the negatives of the picture sequences and of the sound sequences shall be separated one from the other, both parts developed separately,

and thereupon printed side by side on a common positive film,

or,

in the separate recording of the picture sequence on one negative and the sound sequence on another negative, both negatives, in so far as they are not yet developed, shall be developed separately, individually, and thereupon printed side by side on a common positive film,

or,

in case of the existence of a completely-developed negative of the picture sequence and the later recording of the negative of the sound sequence, the negative of the sound sequence shall be developed alone, and thereupon the negative of the picture sequence and the negative of the sound sequence printed side by side on a common positive film,

differs as regards each of its three methods of solution from the ideas proved to have been previously known in at least one of its features, which in their combination alone will result in the positive film aimed at by the inventor. Thus, for example, the idea ad 1) lacks the feature of the separate development of the picture sequence and sound sequence negatives; the ideas ad 2 b), c) and d) do not deal with sound picture films; the idea ad 2 a) does not show a photographically-recorded sound sequence; the idea ad 2 e) does not result in a continuous sound sequence which is arranged along (side) the picture sequence; no positive film constituting a unit can be produced according to the idea ad 2 f) but only a positive film composed of two positives cemented together; and in the idea ad 2 g) the picture sequences and the sound sequences are not arranged side by side on a common coating, but over

one another on two coatings. In so far as these known ideas concern the production of sound-picture films at all, the instruction of Patent 368,383 characterized above, shows considerable advantages as compared with each one in particular. This appears clearly from the introduction of the description of patent specification 368,383, as compared with idea mentioned ad 1) and disclosed by the French patent specifications 448,757 and 459,535, and cannot be doubtful either as compared with the idea mentioned ad 2 a), published in the German patent specification 279,598 of Reimer, and the idea mentioned ad 2 e), disclosed by the American patent specification 1,254,684.* For the separate individual treatment of the negatives constitutes a considerable progress as compared with the simultaneous development of picture sequences and tone sequences recorded on the same negative, as set out in particular in the introduction to the patent specification 368,383. The same applies to the photographically-produced sound as compared with the mechanically-produced sound and to the continuous sound sequences arranged on the edge of the film, as compared with the sound marks arranged between the pictures. The idea mentioned ad 2 f), published in the American patent specification 1,335,651 of Bullis, results in a film, which, as correctly explained by the expert, Professor Dr. Lehmann, in his above-mentioned written opinion, shows the gross technical deficiency of becoming unfit for use after short projection, owing to the perforated middle seam of double thickness, so that its replacement by a film constituting a unit doubtless shows a substantial technical progress. Professor Dr. Lehmann, in the said opinion, has rightfully pointed out also the disadvantages of a film produced with the use of the idea mentioned ad 2 g), proposed by the American patent specification 1,260,337 of Craig, and has seen these disadvantages preeminently in the fact that in the coating

*Greensfelder.

of both face and back, the capability of being damaged is very great, and that in the applying of two coatings on the one face, the production is very complicated, so that the instruction of Patent 368,383, characterized above, shows a marked advantage as compared with the usability of the idea ad 2 g). Taking into consideration the French patent specifications 448,757 and 459,537 and the American patent specifications 1,254,684,[1] 1,260,337[2] and 1,335,651,[3] the expert heard in the previous lawsuit, Professor Dr. Lehmann, in his aforementioned written opinion, demonstrated by correct arguments, to which reference is made, that the new proposition of patent specification 368,383 constitutes, as compared with the said printed documents, a technical progress, which must result in assuming permanently inventive activities in the invention. As appears from his opinion of October 24, 1933, delivered to the Plaintiff ad 1), an inspection of the German patent specification 317,269 of Bolton-Baeckers, led to the conclusion that this process, in so far as it operates with separately recorded and developed negatives, can no longer be considered as an invention capable of being protected. The arguments for this stated by Professor Dr. Lehmann cannot be admitted as convincing. For this patent specification nothing but the statement that cinematograms which are recorded on two films, whose component parts cannot for some reason be recorded by means of a single apparatus, may be combined subsequently by composite printing, a statement made in the patent specification in connection with the special proposition of combining a pictorial record with the picture of the conductor beating time for the cinema orchestra. Now if it is considered that the German patent specification 317,299 never mentions sound-picture films, but that on the contrary, the invention described in this patent spec-

---

[1]Greensfelder.

[2]Craig.

[3]Bullis.

ification concerns silent films solely, then the proposition contained in this German specification, the invention to be utilized in the combination of several cinematograms, if read with an unbiased mind, can only be held to relate to silent films. Thus this reference discloses at best a process, which, as the above discussion of the state of the art at the time of the filing of the application for Patent 368,383 has shown, had already been published for silent films in several of the publications dealt with (for example, the British patent specification 6,727 of Downing and 1,286,383 of Messter). The statement made by the expert, Professor Dr. Lehmann, that the purpose, the continuous musical accompaniment with the necessity of maintaining synchronization, as well as the means, the individual development adapted to varying lighting conditions, existed in analogous form in a film produced according to the German patent specification 317,299 and the sound picture film of 368,383, does not take into account the material distinction, that the one is a method resulting in a silent film only, whereas the other is a method resulting in the sound-picture film. This material distinction between a combined picture film and a sound and picture film, where the sounds are photographically-recorded, lies particularly in the fact that a reproduction of the sounds, free from any distortion, is only possible if the darkening of the sound lines on the sound print produces changing conditions of light, which exactly correspond to the changing conditions of light during recording, whereas, naturally other instructions have to be heeded for the suitable darkening of the picture print. For this reason alone the Plaintiffs' view cannot be admitted as correct, that the transfer of the expedients known [usual] for the production of silent films to the production of a sound-picture film, according to the established facts stated above in the patent specification 368,383, were so obvious for the average expert, that no further invention was needed for it.[to effect it]. The contrary is confirmed by the propositions made by Bullis and Craig, which doubt-

less most resemble the propositions of the patent specification 368,383, and which, nevertheless, were not able to accomplish the instructions given solely in patent specification 368,383 as characterized above. For the very reason that the numerous prior publications and other propositions on the state of the art presented by the Plaintiffs did not result in the solutions, so simple in practice, which first made possible the production of really serviceable sound-picture films, the progress from the state of the art at the time of the filing of the application for Patent 368,383 has to be considered, in contrast to the Plaintiffs' view, as an inventive achievement worthy of protection. Accordingly the protection of Patent 368,383 has to be extended to these instructions. There again the Plaintiffs cannot rely successsfully on the decision of the United States District Court submitted by them, especially as the Defendant has proved with correct reasoning, that the decision proceeds obviously from principles of patent law quite different from those applicable under German law.

As the District Court has established with correct arguments, and as a comparison of the methods characterized by the Plaintiffs with the instructions protected by Patent 368,383, as was proved above, confirms, all the acts, the rightfulness of which the Plaintiffs wished to see established, constitute an unlawful infringement of the rights guaranteed to the Defendant under Patent 368,383. The same applies also for the reasons correctly stated by the District Court, to which reference is made here, to the subsequent synchronization of the talking film "Deutsche Sinfonie". Therefore the declaratory claim is dismissed as unjustified. Accordingly the claim for damages preferred by the Plaintiffs against the Defendant must also fail of justification, no examination being required of the question whether the Plaintiff ad 1), which the Defendant denies, has really suffered a loss through the provisional injunction.

Accordingly it had to be decided as has been done. The decisions as to costs is based on the provisions of Articles 91, 97, and 101 ZPO. Under the provision of Art. 708, no. 7, ZPO, the decision was declared provisionally executory. The other decisions are justified by Articles 713 and 108 ZPO.

Signed	Signed	Signed
NATORP	KUSCH	SCHUMANN

Completed
Berlin, May 25, 1934.

Konetzkow Justizangesteller.
As Clerk of the Kammergericht.

Seal of the
Kammergericht
Berlin

The preceding signature of Justizangestellter Konetzkow
As clerk of the Kammergericht
is herewith certified
The clerk is entitled to certify the copy
Berlin, December 29, 1934
The president of the District Court
represented by
Gardiewski
Seal of the president of the district court.

American Consular Service.

German Reich,
Province of Brandenburg,
Consulate General of the United States of America
at Berlin. } ss.:

I, Prescott Childs, Consul of the United States of America at Berlin, German Reich, duly commissioned and qualified, do hereby certify that

Gardiewski

whose true signature and official seal are, respectively, subscribed and affixed to the foregoing instrument, was at the time of subscribing same an official of the Prussian

Landgericht at Berlin of the .....

German Reich, duly commissioned and by law authorized to execute such acts, and that his signature and official seal affixed thereto are genuine, and as such are entitled to full faith and credit.

IN WITNESS WHEREOF I have hereunto set my hand and the seal of the Consulate General at Berlin, German Reich, this 28th day of December, 1934.

PRESCOTT CHILDS
Consul of the United States of America.

(SEAL)

AMERICAN CONSULATE GENERAL
American
Foreign Service
$2.00 Dec. 28—1934
FEE STAMP
BERLIN, GERMANY

For the contents of the annexed document the Consulate General assumes no responsibility.

DECISION OF THE REICHSGERICHT.

I. 189/1934.

In the name of the German people

Pronounced
December 22, 1934
Signed, Merck
Regierungsinspektor
As Clerk of the Court

In re

1.) The firm, Naturfilm
Robert Schonger
Berlin S W11, Anhalterstrasse 7.

2.) The firm Aktiengesellschaft für Filmfabrikation in Berlin-Templehof, Viktoriastrasse 13/18, Represented by its directors K. Waschneck and A. Guenthal, of the same place.

Plaintiffs and Appellants,

Counsel: Dr. Benkard, advocate of Leipzig,

versus

1.) Firm Tobis, Tonbildsyndikat AG. of Berlin W 8, Mauerstrasse 43, represented by its director, Dr. Hans Henkel, of the same place
Defendant and Appellee.

2.) Klangfilm—GmbH in Berlin SW 11, Askanischer Platz 4, represented by its managers, Dr. Rottgardt and Schwab, of the same place.
Co-intervenor and Appellee.

Counsel: Attorney Privy Councillor of Justice, Dr. Wildhagen in Leipzig.

The Reich Court (The Supreme Court) I. Civil Session.

Upon the oral hearing of December 22, 1934,
with participation:

Of the Senate President Triebel and the Reichsgerichtsrate Dr. G. Mueller, Dr. Conzes, Dr. Delius and Dr. Pinzger.

decided:

The appeal from the decision of the 10th Civil Session, Circuit Court in Berlin, of February 10, 1934, is rejected.

The Plaintiffs-Appellants must bear the costs of the appeal proceedings.

For the Sake of Justice.

Facts of the Case.

The defendant was formerly proprietor of an exclusive license on the DRP. 368,383, granted effective as of April 15, 1921, which he acquired January 26, 1933. This patent concerns a process for producing films with picture sequences and photographed sound sequences. The patent claims are worded as follows:

1.) Process for producing positive films, comprising picture sequences and photographically-recorded sound sequences characterized by the fact that the negatives are developed separately.

2.) Process according to claim 1.) which is characterized by the fact that the record of sound and the picture sequences are recorded on a single film which is subsequently separated.

3.) Process according to claim 1.) which is characterized by the fact that the negatives, after treatment, are combined one with the other longitudinally.

The defendant [patent owner] took the position as against the Plaintiff ad 1) [film producer] that, on the basis of the above mentioned patent, he alone is entitled to produce or cause to be produced positive films comprising picture sequences and photographically-recorded sound sequences by developing the negatives separately and combining them, after separate treatment, by composite printing on a single positive film. The defendant took the same position as against the plaintiff ad 2) [film laboratory], who is engaged in separate development of sound and picture strips (films) which are recorded separately, and in the composite printing on a single positive film. The defendant expressed this as against the plaintiff ad 2) in a letter of December 20, 1932, and as against the Plaintiff ad 1) in proceedings concerning the issuance of a provisional injunction.

With the claim, the plaintiffs made the following motion: to establish that each of the plaintiffs is entitled to commerically produce, or to cause to be commercially produced, positive films comprising picture sequences and photographically-recorded sound sequences in which the sound recording and the picture recording are effected on separate strips of film, by developing the negatives separately and producing therefrom, by consecutive printing, a single positive film comprising sound and picture; or to place on the market, offer for sale, especially to sell or let out, positive films so produced.

The plaintiff ad 1) moved further: to order the defendant to pay to him 20,000 RM., and auxiliarily: to establish that he is entitled to commercially produce or to cause to be commercially produced, positive films containing picture sequences and photographically-recorded sound sequences in which the picture recording takes place be-

fore the recording of the sound, and, what is more, on a strip of film other than that on which the sound is recorded, by developing the negatives separately and producing therefrom, by consecutive printing, a single positive film comprising sound and picture; or to put on the market, offer for sale, especially to sell or let out, positive films so produced.

The plaintiffs are of the opinion that the defendant wrongfully gives to DRP 368,383 the above interpretation; the extent of protection of this patent is actually limited, according to the state of the art, to the cases of joint recording of the sound picture on one and the same strip of film and consequently does not embrace in particular the subsequent synchronization of silent films, for which the defendant brought charges against the plaintiff ad 1). Through these charges in connection with the preparation of the sound picture film "Deutsche Symphonie", the plaintiff ad 1) suffered a loss of more than 20,000 RM.

The defendant moved to dismiss the claim and said in substantiation that the state of the art at the time of the filing of the application for the patent DRP 368,383 justifies his interpretation of the extent of protection of the patent. The significance of this patent is best apparent from the fact that previously serviceable positive films with sequences of pictures and photographed sound record had not existed at all.

The District Court dismissed the claim. The plaintiffs lodged an appeal and with the application for an alteration of the decision of the District Court, gave their application the following wording:

1.) To establish that each of the plaintiffs is entitled to commercially produce or cause to be commercially produced positive films comprising picture sequences and photographically-recorded sound sequences, and on which the picture recording and the sound recording take place on separate film

strips, by developing the negatives separately, and producing from these negatives, which remain separated, by simultaneous printing, or by, as regards space or time, consecutive printing on a single positive film comprising sound and picture; or to commercially place on the market, offer for sale, or especially to sell or let out, positive films so produced.

2.) Only plaintiff ad 1) auxiliarily:

To establish that plaintiff ad 1) is entitled to commercially produce or to cause to be commercially produced, positive films comprising picture sequences and photographically-recorded sound sequences, in which the picture recording is separated in time from the sound recording and, what is more, is effected on a strip of film other than that on which the sound is subsequently recorded, by developing the negatives separately and by producing from these negatives, which remain separated, through simultaneous printing or, as regards space or time, consecutive printing, a single positive film comprising sound and picture; or to commercially place on the market, offer for sale, or especially sell or let out, positive films so produced.

3.) Only plaintiff ad 1):

To order the defendant to pay to plaintiff ad 1) the sum of 20,000 RM.

Klangfilm GmbH., having joined the defendant as co-intervener with the defendant, the defendant and co-intervener moved the rejection of the appeal. The Kammergericht complied with this request. The plaintiffs lodged an appeal and moved that the contested decision

be reversed and judgment pronounced in accordance with their motions of appeal. Auxiliarily, they finally gave their applications for a judgment declaratory in the second proceedings the following phrasing:

A) It is moved:

To establish that each of the plaintiffs is entitled to commercially produce or to cause to be commercially produced, positive films comprising picture sequences and photographically-recorded sound sequences, in which the sound recording and the picture recording is effected on *two* strips of film wound on different spools, *which* [strips of film] *are led, not jointly, but independently of each other, through two different recording cameras, one for the picture and the other for the sound*, such production being carried out by developing the negatives separately, i. e., independently of each other, and producing from them by consecutive printing, a single positive film comprising sound and picture; or to commercially place on the market, offer for sale, or especially sell or let out, positive films so produced.

B) The plaintiff ad1) auxiliarily:

To establish that the plaintiff ad 1) is entitled to commercially produce or cause to be produced positive films comprising picture sequences and photographically-recorded sound sequences in which the picture recording precedes, as regards time, the sound recording, and, what is more, is done on a strip of film, the development of which is complete before the sound recording, such production being carried out by producing from these negatives, developed at different times, by simultaneous, or, as re-

gards space and time, consecutive printing on a single positive film comprising sound and picture; to commercially place on the market, offer for sale, or especially to sell or to let out, positive films so produced.

The defendant and the co-intervener requested that the appeal be rejected.

Reasons for the Decision.

The Kammergericht rightfully proceeds from the view that the basis for the determination of the extent of protection of DRP 368,383 must be the delimitations of the inventive idea of the patent as presented by the problem discussed and the solutions disclosed in this patent. If the principal claim alone were considered, for the purpose of determining the subject matter of the patent, it would indeed be possible to believe that it concerns itself not with the complete [total] production of a positive film (film print), but only with the part comprising the process from the completion of the recording to the completion of the development of the negative. But the Kammergericht rightfully considered the entire contents of the patent specification, in order to ascertain therefrom what problem the patent solved. From this it became evident that the new process can only be achieved when the positive film is completed, and that the inventor by no means wanted to alter a part of an already known process, but rather to make known for the first time a serviceable process by which prints with undistorted sound sequences could be achieved. From this it is evident that the patent specification places under protection a combined process from the beginning of recording to the completion of printing, the uniform technical success of which [process] is assured, and that therefore the combination must be protected in its entirety, inasmuch as it is new in itself; from which it is of no con-

sequence whether individual parts of the process were already previously known. The Kammergericht proceeded according to these principles; the appeal, therefore, charges it unjustly with having violated the principles of law laid down for the determination of the extent of protection.

The Appellants complain that the disputed decision failed to perceive that of the three parts of the process of production, recording of picture and sound, development and treatment of the negative, printing and synchronization, only the second part was dealt with in the patent and in so far the knowledge of those skilled in the art enriched. Upon a careful examination of the description of the patent it appears, however, that all parts of the process are dealt with there. Even though, then, only one part is treated exhaustively and the patent specification is otherwise brief, because the process offers no material difficulties, it does not follow therefrom that the whole process of production cannot be covered by the protection. For the uniform technical success [result], which is the chief point, was a positive film which, as the Kammergericht points out, presented picture sequences and photographed sound sequences in an arrangement side by side, which has so far proved serviceable; and this result was in no way assured after the separation of the negatives, as long as the instructions of the patent were not followed, which, in spite of its relative simplicity, had been up to now neither set out nor applied. In this way, the Kammergericht establishes the uniform technical success, thus obtaining the basis for the determination of the inventive idea, both without evident legal error.

Accordingly no objection can be raised when the Kammergericht derives from patent specification no. 368,383, that the problem dealt with therein is this: Production of a positive film, constituting a unit, comprising in the known way picture sequences and sound sequences side by side on the same carrier [film], the sounds being recorded by way of photography. Thereto the Kammerger-

icht adds the wording of the solution: The positive film, constituting a unit, is obtained by producing picture negative and sound negative through a separate development and by printing the separate negatives on the single positive film in such a way that they are arranged there side by side. According to the further statements of the Kammergericht, which do not show any error in law, either there is nothing in the wording of the patent specification or in the course of the granting proceedings which is incompatible.

The Appellants think that they must conclude from the course of the granting proceedings, that the sentence "The recording may be effected either on two films . . .", was wrongfully included in the description and, therefore, must not be considered. The Kammergericht rightfully rejected this view. For the wording at issue is based on a suggestion taken over verbatim from the examiner, which, moreover, is conformable also in so far as contents is concerned with the original wording of the description. But even otherwise there can be no discussion of an expressly-ordered limitation of the protection claimed by order of the Patent Office. The examiner had contrasted the application with DRP 279,598 and had consequently demanded the cancellation of the original claim 2, whereby the separate recording of picture sequences and sound sequences was to be placed under protection. Only at first glance does this appear to be contradictory in the face of the examiner's aforementioned attitude. The Kammergericht rightfully pointed out, however, that DRP279,598 does not concern photographically-recorded sound sequences and that, therefore, the examiner's demand for the cancellation of the original claim 2) is understandable. This valuation of the granting proceedings cannot be objected to; it is in no way in opposition to the decisions of the Reichsgericht.

Accordingly the Kammergericht, without any legal error, came to the conclusion from the contents of the patent specification and the course of the granting proceedings, that

the subject of the patented process must not be limited to the employment of a strip of film originally constituting a unit, that, in any case, no such intention on the part of the patent office is discernible, and that, therefore, a protection limited to such an extent could be accepted only if the state of the art forced it. But exactly this the Kammergericht denies without any legal error, by following the deductions of the expert Professor Dr. Lehmann, in his opinion of April 27, 1930, to the use of which no objection can be raised.

To the arguments of the Kammergericht on the state of the art, the Appellants in contrast to their written deductions, have stated in advance generally that the state of the art had been absolutely correctly established by the Kammergericht on the whole, but have complained that the Kammergericht had not correctly estimated the American patent specification 1,260,337 (Craig). Therefore it may be taken for granted that the French patent specifications 448,757 and 459,537 reflect the earlier state of the art, on which sound and picture were recorded on one strip of film and this strip was treated as a unit, because it was believed that only thus could the synchronization be safeguarded. A separate treatment of picture and sound could certainly not be in dispute here. This possibility appeared subsequently in the processes of the two American patents of Craig and Bullis (Nos. 1,260,337 and 1,335,651). The Kammergericht, supported by the abovementioned opinion of Dr. Lehmann, deemed them not prejudicial to the novelty [of the invention], because processes are described there which differ materially from the process of the patent in suit.

Bullis uses for recording two separate strips [films], treats both negatives separately, and produces two independent positives, the synchronization of which must be secured by matching [harmonizing] the positive films according to the perforation holes or by cementing the marginal edges of the two films. The problem of the

patent in suit does not come into consideration at all here, as the Kammersgericht correctly shows. Also the valuation of the Craig patent is not to be objected to. The Kammergericht rightfully examines this previous publication to see what is here disclosed and therefore, according to Article 2 of the Patent Law, can no longer be considered as new [novel]. The Appellants believe that they must complain that the Kammergericht wrongfully did not fully consider what is disclosed in Craig's patent specification. But the Appellants cannot be agreed with in this. For the Kammergericht, in reference to Lehmann's opinion, took pains to elucidate exhaustively the inventive idea of the American patent 1,260,337 and has without evident legal error established that there the problem of creating a positive constituting a unit is solved *by means other* than those proposed by the patent in suit. Craig printed picture and sound strips (films) *on different coatings* on the same side [face] of a positive film strip, or on different sides [faces] of the same film strip. A product such as obtained by the patent in suit, is never obtained on account of the differing means, as stated, of procedure. In any case, the instruction to print two separately-developed negative strips [films] side by side on the same positive film cannot be derived from the specification of the Craig patent.

The plaintiffs have tried to prove that the defendant's process according to DRP 368,383 is distinguished from the Craig process in yet another respect and that exactly in this respect the plaintiffs did not make use of the means of the patent in suit, even though the defendant's view of the signification of the patent in suit were otherwise followed. This employs, namely, the single-track system, in which the objective for the picture and the sound slit are fitted on the same recording apparatus, despite the recording on two independent negative strips [films]. On the contrary, Craig, and in conformity with him, the plaintiffs, employs the two-track system, with separate cam-

eras for the picture and sound recording. The expert Lehmann did not find a difference worthy of consideration in this and the Kammergericht followed him. No legal error can be found therein. On interrogation, the plaintiffs had admitted, that according to the so-called two-track system the records must be taken simultaneously for picture and sound strips [films] and that arrangements must be made in order to safeguard synchronization in the production of the positive film. For the solution of the problem here in question it is then of absolutely no importance whether a single apparatus is used for recording or whether two recording apparatuses are used, which are connected or adjusted to each other in a manner sufficient for synchronization.

Hence it follows that the means (apparatus) used by Craig for the recording of negative films are equivalent to those of the patent in suit. If this is not explicitly stated in the decision of the Kammergeright, it is nevertheless evident from this decision that the Kammergericht considered as irrelevant the difference so strongly emphasized by the Appellants. That is sufficient and is consistent throughout with the decisions of the Reichsgericht, on the equivalence of different means for the solution of the same technical problem. Hence it follows further that the plaintiffs cannot base their motions of complaint, even in their latest form, on the use of the two-track system. In particular, the protection of the patent in suit cannot be limited to complete synchronization and the plaintiffs' contested process for subsequent synchronization released to the plaintiffs. For as long as the patent in suit specifically emphasizes that it is of no consequence whether the printing of picture and sound is effected simultaneously or consecutively, and even describes the latter as preferable, the difference in time between the two parts of the printing can play no role. Therefore the two lower courts have rightfully dismissed the complaint in full.

The appeal must accordingly be rejected.

Signed. TRIEBEL DR. G. MÜLLER CONZE
DELIUS PRINZGER

Prepared

MERCK [Signature]
Reigerungsinspektor
as Clerk of the Court.

The preceding signature of Reigerungsinspektor Merck is certified with the remark that the mentioned is legally entitled to issue this copy.

Leipzig, the 14th of January, 1935.

Official seal [Identified as the seal of the Deutsches Reich.]

The President of the Reichsgericht
BUMKE [Signature]

Value of the subject of contest
in the Court of Revision
200,000 RM.
Defined by decision of December 22, 1934.

GERMAN REICH
STATE OF SAXONY
CONSULATE OF THE
UNITED STATES OF
AMERICA AT LEIPZIG } S. S.

I, Ralph C. Busser, Consul of the United States of America at LEIPZIG, State of Saxony, do certify that Dr. E. Bumke whose signature is subscribed to the foregoing instrument was at the time of subscribing the same

President of the Reichsgericht
(Supreme-Court of Germany)

at Leipzig State of Saxony, Germany
duly commissioned and by law authorized to execute such acts, and that his signature and official seal affixed thereto are genuine, and as such are entitled to full faith and credit.

WITNESS MY SIGNATURE and Seal of Office at Leipzig, Germany,
this 15th day of January, in the year 1935.

RALPH C. BUSSER
Consul of the United States of America

Serv. No. 69
Fee No. 38
AMERICAN
Foreign Service
Jan. 15 1935
$2.00
FEE STAMP

(CONSULAR SEAL)

Affidavit of Grenville Meixel, Translator.

State of New York,)
County of New York,) ss.:

Grenville Meixel, being first duly sworn, deposes and says:

I am of mature age, a resident of New York City, New York, and I am the librarian of the Applied Science Library of Columbia University, New York City, New York.

I am thoroughly familiar with the German language as used in German patents and in other technical and scientific matter and frequently in connection with my employment as librarian it is my duty to translate such matter from German into English.

I have given careful consideration to the three accompanying certified copies of German court decisions, as follows:

(a) Decision of the District Court I of Berlin, Germany, In re Naturfilm Hubert Schonger and Aktiengesellschaft fur Filmfabrikation, Plaintiffs, v. Tobis Tonbildsyndikat Aktiengesellschaft, Defendant;
(b) Decision of the German Kammergericht, and,
(c) Decision of the German Reichsgericht, on appeals in said suit;

and I depose and say that the annexed translations of said decisions were prepared by me and comprise complete and accurate translations into English of said decisions.

GRENVILLE MEIXEL.

Subscribed and sworn to before me
this 1st day of February, 1935.

W. Houston Kenyon, Jr.,
Notary Public.

(Seal)
New York County Clerk's No. 382.
Commission expires March 30, 1936.

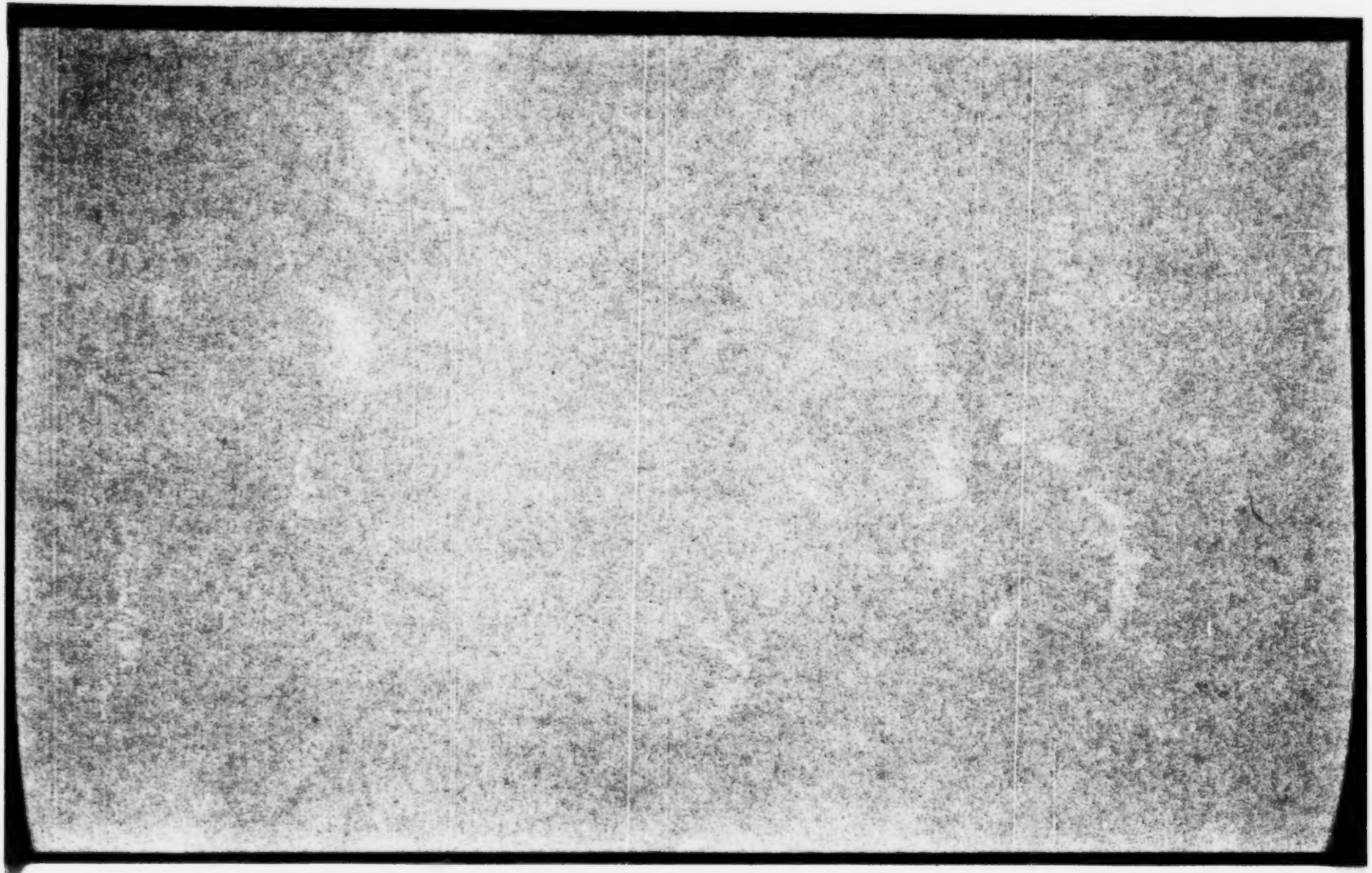

FILE COPY

FILED
FEB 2 1935

IN THE

Supreme Court of the United States,

OCTOBER TERM, 1934.

No. 254.

PARAMOUNT PUBLIX CORPORATION,

Petitioner,

vs.

AMERICAN TRI-ERGON CORPORATION,

Respondent.

MEMORANDUM FOR RESPONDENT RELATING TO DECISIONS OF THE SUPREME COURT OF GERMANY AND INFERIOR GERMAN COURTS IN RESPECT OF GERMAN PATENT NO. 368,383 CORRESPONDING TO THE UNITED STATES PATENT NO. [illegible] HERE IN SUIT.

GEORGE WHARTON PEPPER,
THEODORE S. KENYON,
Of Counsel.

The Evening Post Job Printing Office, Inc., 154 Fulton St., New York, N. Y.

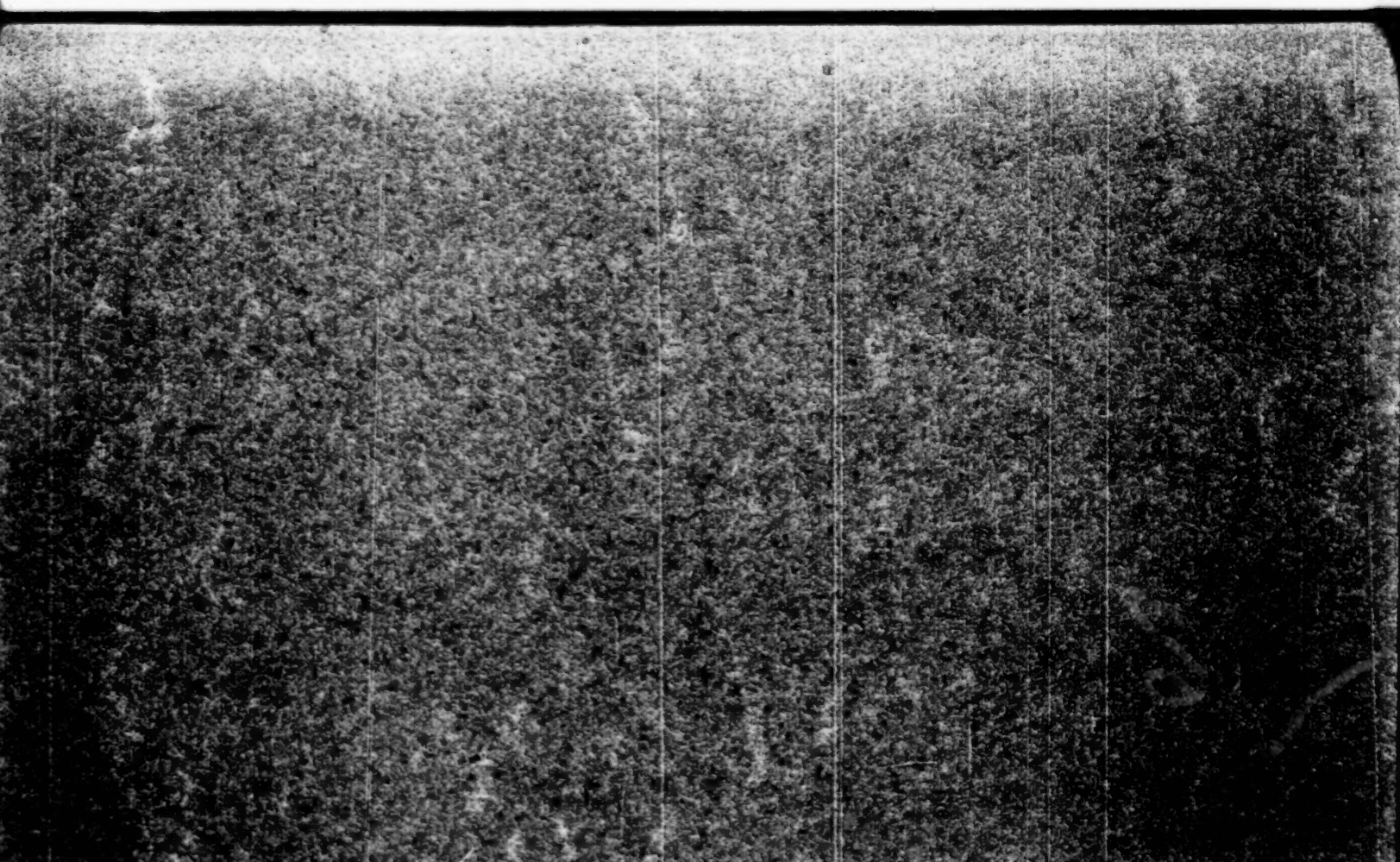

Supreme Court of the United States

OCTOBER TERM

PARAMOUNT PUBLIX CORPORATION, Petitioner. vs. AMERICAN TRI-ERGON CORPORATION, Respondent.	No. 254

MEMORANDUM FOR RESPONDENT RELATING TO DECISIONS OF THE SUPREME COURT OF GERMANY AND INFERIOR GERMAN COURTS IN RESPECT OF GERMAN PATENT NO. 368,383 CORRESPONDING TO THE UNITED STATES PATENT NO. 1,825,598 HERE IN SUIT.

We respectfully call to the attention of the Court the recent decision (December 22, 1934) of the Supreme Court of Germany and the decisions of the lower German courts respecting the German patent which corresponds to the patent here in suit, certified copies of these decisions having come to hand since the filing of Respondent's Brief herein. We have had these decisions translated with all possible speed consistent with accuracy by the Librarian of the Applied Science Library of Columbia University. Copies of the translations and photostats of the original certified German texts have been deposited

with the Clerk of this Court and served on petitioner's counsel.

It appears from the decisions, that the action was brought by a film producer and a film laboratory for a declaratory judgment that certain methods employed by them of recording sound and pictures on separate films, separately developing them, and then printing them on a single positive are not infringements of the Vogt, *et al.*, German patent No. 368,383.* Each of the courts decided that the methods used by the plaintiffs constituted infringements of the patent.

It is not our understanding that the issue of validity was involved.

These decisions of the German courts are chiefly interesting for their findings of fact with respect to the most important of the prior art patents referred to by the petitioner-defendant in the case at bar. Based upon these findings, the ten judges of the three courts which passed on the matter, were unanimous in deciding that the German patent is entitled to broad scope and protection.

While recognizing the difference between German and American law applicable to patents we think the following statements in the decisions of the Kammergericht and of the Reichsgericht, finding invention over the art of composite photography and the disclosures of Bullis and Craig, are worthy of repetition here.

From the decision of the *Kammergericht*, see pages 50, 51 of the translation:

> "This material distinction between a combined picture film and a sound and picture film, where the sounds are photographically-recorded, lies particularly in the fact that a reproduction of the sounds, free

---

* This German patent is in evidence as Deft.'s Ex. L and is printed at R. page 960, translation at R. page 961. The application for the United States patent here in suit (R. p. 475) is a literal translation of the application for the said German patent, see R. pages 578-583.

from any distortion, is only possible if the darkening of the sound lines on the sound print produces changing conditions of light, which exactly correspond to the changing conditions of light during recording, whereas, naturally other instructions have to be heeded for the suitable darkening of the picture print. For this reason alone the Plaintiffs' view cannot be admitted as correct, that the transfer of the expedients known [usual] for the production of silent films to the production of a sound-picture film, according to the established facts stated above in the patent specification 368,383, were so obvious for the average expert, that no further invention was needed for it (to effect it). The contrary is confirmed by the propositions made by Bullis and Craig, which doubtless most resemble the proposition of the patent specification 368,383, and which, nevertheless, were not able to accomplish the instructions given solely in patent specification 368,383 as characterized above. For the very reason that the numerous prior publications and other propositions on the state of the art presented by the Plaintiffs did not result in the solutions, so simple in practice, which first made possible the production of really serviceable sound-picture films, the progress from the state of the art at the time of the filing of the application for Patent 368,383 has to be considered, in contrast to the Plaintiffs' view, as an inventive achievement worthy of protection. Accordingly the protection of Patent 368,383 has to be extended to these instructions. There again the Plaintiffs cannot rely successfully on the decision of the United States District Court submitted by them, especially as the Defendant has proved with correct reasoning, that the decision proceeds obviously from principles of patent law quite different from those applicable under German law."

From the decision of the *Reichsgericht*, see page 60 of the translation:

"But the Kammergericht rightfully considered the entire contents of the patent specification, in order to ascertain therefrom what problem the patent solved. From this it became evident that the new

process can only be achieved when the positive film is completed, and that the inventor by no means wanted to alter a part of an already known process, but rather to make known for the first time a serviceable process by which prints with undistorted sound sequences could be achieved. From this it is evident that the patent specification places under protection a combined process from the beginning of recording to the completion of printing, the uniform technical success of which [process] is assured, and that therefore the combination must be protected in its entirety, inasmuch as it is new in itself; from which it is of no consequence whether individual parts of the process were already previously known."

and at page 61 of the translation:

"Upon a careful examination of the description of the patent it appears, however, that all parts of the process are dealt with there. Even though, then, only one part is treated exhaustively and the patent specification is otherwise brief, because the process offers no material difficulties, it does not follow therefrom that the whole process of production cannot be covered by the protection. For the uniform technical success [result], which is the chief point, was a positive film which, as the Kammergericht points out, presented picture sequences and photographed sound sequences in an arrangement side by side, which has so far proved serviceable; and this result was in no way assured after the separation of the negatives, as long as the instructions of the patent were not followed, which, in spite of its relative simplicity, had been up to now neither set out nor applied. In this way, the Kammergericht establishes the uniform technical success, thus obtaining the basis for the determination of the inventive idea, both without evident legal error."

The decisions of the German Courts appear at the following pages of the translation.

District Court	Decision	page 1
Kammergericht	"	" 16
Reichsgericht	"	" 54

For convenience of reference we here indicate the pages of the translation at which the following matters of interest in the case at bar are discussed by the German courts.

Bullis
- District Court 6, 12
- Kammergericht 33, 37, 47–50
- Reichsgericht 63

Craig
- District Court 5, 11
- Kammergericht 33, 39, 47–50
- Reichsgericht 63–65

Greensfelder
- Kammergericht 33, 34, 47–49

Single Film System
- Kammergericht 37, 47–49
- Reichsgericht 63

Composite Printing
- District Court 13
- Kammergericht 34

Reimer
- District Court 5, 11
- Kammergericht 31–33, 47, 48
- Reichsgericht 62

Messter
- Kammergericht 33–35, 47, 50

Downing
- Kammergericht 33, 34, 36, 47, 50

Respectfully submitted,

GEORGE WHARTON PEPPER,
THEODORE S. KENYON,
Of Counsel for Respondent.

SUPREME COURT OF THE UNITED STATES.

No. 254.—October Term, 1934.

Paramount Publix Corporation, Petitioner, *vs.* American Tri-Ergon Corporation.	Petition for Writ of Certiorari to the United States Circuit Court of Appeals for the Second Circuit.

[March 4, 1935.]

Mr. Justice Stone delivered the opinion of the Court.

In this case certiorari was granted, 293 U. S. —, to review a decree of the Court of Appeals for the Second Circuit, 71 F. (2d) 153, which held valid and infringed the process patent of Vogt and others, No. 1,825,598, of September 29, 1931, "for producing combined sound and picture films." It reversed the district court, which had held the patent invalid for anticipation and want of invention. 4 F. Supp. 462. The several claims involved relate to a method of producing a single photographic film by printing upon it a picture record and a sound record from separately exposed and developed negatives. The positive film thus produced is useful and extensively used in reproducing sound and picture records in the exhibition of "talking moving pictures."

The respondent, who was the plaintiff below, is a patent holding company, and acquired the patent by assignment. The petitioner, who was the defendant below, is a producer of motion pictures, and the defense of the present suit has been conducted on its behalf by the Electrical Research Products, Inc., a subsidiary of the Western Electric Company.

In order that the precise nature of the claims may be understood, it will be necessary first to describe briefly the procedure and the mechanisms employed in recording and reproducing talking motion pictures, although neither is embraced in the claims of the patent. Several methods have been devised for recording sound and reproducing it in connection with the exhibition of motion pictures. A familiar one is the disc system, by which the sound vibrations are mechanically recorded upon and reproduced from

discs by a stylus, which receives the sound virbations for recording and transmits them from the disc to a loud speaker in reproducing the sound.

Another method, important here, is the photographic film system, in which the sound vibrations are recorded upon a photographic record. In the typical procedure, used by the petitioner, the sound waves to be recorded are received by a microphone so devised as to produce variable electric currents whose variations correspond to the variations in the sound waves received. The electric currents thus produced are amplified and transmitted to two metal threads, arranged side by side so as to form a narrow slit about 1 1000 of an inch in width, called a light valve. The current produces vibration of the metal threads with consequent variation of the light passing through the valve exactly corresponding to the sound vibrations to be recorded. In recording sound, a moving sensitized photographic film is exposed to a beam of light passed through the vibrating light valve which is activated by the electric currents varying according to the sound vibrations. The exposed film is then developed and the "sound record" thus produced is printed from it upon a positive film, where it appears as a series of short parallel lines of varying light density, corresponding to the sound vibrations, which have controlled in turn the variation in the electric current passing to the light valve and the corresponding variations of light passing through it to the sensitized film.

In reproducing the recorded sound the procedure is reversed. The positive sound film is passed before a light slit, from which the light passes through the sound record film to a photoelectric cell, which is devised to produce a variable electric current corresponding to the light variations caused by the moving record film. The electric current thus produced is amplified and passed to a loud speaker, where it is translated into sound vibrations.

Successful operation of the talking motion picture involves synchronization of the sound and picture records. The difficulties of synchronization are obvious where the recorded picture and sounds are separately reproduced by independent mechanisms. Success has been achieved, and convenience in use of the two records secured, by uniting them upon a single positive film and passing it at the requisite uniform speed through a single ap-

paratus designed to reproduce both the sound and the picture. A familiar method of securing the two records on a single film is by photographing simultaneously the picture record and the sound record side by side upon the same strip of film and then printing from the developed negative a single positive film. This method was disclosed in the Haines, British Patent, No. 18,057, of 1906; in the Ries Patent, U. S. No. 1,473,976, of 1923, applied for in 1913; in the French patent to MacCarty, No. 448,757, of 1912; and in the Walker Patent, U. S. No. 1,186,717, of 1916. Another method is by mechanically uniting the two positive records, as by cementing them together, after they have been separately printed from negatives separately exposed and developed. This was disclosed by the Bullis Patent, U. S. No. 1,335,651, of March 30, 1920, applied for in 1915. A third method, which is that claimed by the patent in suit, is by printing the two records on a single positive film from separately exposed and developed negatives.

In petitioner's practice separate photographic films, moving at uniform speed, are separately exposed, so as to record a scene and the accompanying sounds, and are then separately developed. The two records are then printed, side by side, on a single positive film, used for reproducing the picture and the sound. In the typical reproducing apparatus the film passes successively through the picture projector and the mechanism for sound reproduction. Accordingly, synchronization is accomplished by arranging the two records on the positive film in such relative positions that the two records will simultaneously reach the two mechanisms for reproducing them, so that the reproduced sound will accompany the reproduced scene of the picture as it did when they were recorded.

The specifications of the patent state broadly that it is of great advantage to arrange the sound record sequences and the picture record sequences on a single film. They then describe the technical difficulties in developing the negative when the sound and picture records are photographed on a single film. They point out that the picture record is made under changing light conditions, which may result in over or under exposures, which will require correction and a treatment in the development of the negative different from that suitable to the sound sequence, which is recorded under different light conditions. It is said that it is practically impossible to secure the variations in treatment required for developing the two types of record where the two sequences, picture and sound, are

photographed upon the same film strip. The specifications then describe the invention as follows:

"According to the present invention the difficulty is overcome by either employing entirely separate films for the simultaneous photographing of the sound and picture negatives, or films which are connected during the photographing, but which are separated from one another before the developing, then separately developing the negatives if and in the manner required to remedy the difficulties, and then printing both sequences—picture and sound—on the different portions of the same positive film."

Respondent relies on Claims 5 to 9, inclusive, and Claim 11 of the patent, of which it is agreed Claim 5 is typical. It reads as follows:

"A process for producing a combined sound and picture positive film, for talking moving pictures, comprising photographing a sequence of pictures on one length of film, and simultaneously photographing on another length of film a corresponding sequence of sounds accompanying the action, separately developing the two negatives in a manner appropriate for each, and printing the sound and picture negatives respectively upon different longitudinally extending portions of the same sensitized film, to form the sound sequences at one side of and along the picture sequence."

It will be observed that the claimed method or process is for combining sound and picture records on a single film and comprises three steps: first, the simultaneous photographing of a picture record and a record of the accompanying sound, each on a separate negative; second, the separate development of the two negatives in a manner appropriate to each; and third, the printing, either simultaneously or successively, from the two negatives of the sound record and the picture record side by side on a single positive film.

It is important to indicate the more significant features of the sound reproduction procedure and mechanisms which are not embraced in the claims. The patent does not claim either a method or a device for recording or for reproducing sound, or a method of synchronizing the two records, or the use of a single film in the reproduction of combined sound and picture records, or any method or device for printing the positive record from the two separate negatives.

While the claims speak of a process or method for producing a combined sound and picture positive film, it is obvious that the

process described and claimed has no necessary connection with sound reproduction. The positive film bearing the combined sound and picture records is a product of the photographic art. The method claimed for producing it relates exclusively to that art. It is neither a method of sound recording or sound reproduction. It claims only a process every step in which is an application of the art of photography: simultaneous exposure of the negatives, their separate development, and printing from them a single positive film. The process is as applicable to any other form of photographic record as to a photographic sound record. It is as effective in the production of the one as the other. Its importance to the sound picture industry arises only from the fact that the single film, bearing the two records, for which no patent is claimed, is of great utility in that industry.

An examination of the prior art can leave no doubt that the method, as thus described and clearly restricted by the patent, lacks novelty and invention. The only step in respondent's method, for which any advance could be claimed over earlier methods, is the process of uniting two records on a single positive film by printing them from separate negatives. The Bullis Patent, already mentioned, and the Craig Patent, U. S. No. 1,289,337, of 1918, had shown the simultaneous exposure and separate development of sound and picture films, the advantages of which, as well as the advantages of the double record on a single film, were well known. The claim to invention is thus narrowed to the single contention that the patentees secured the benefit of these well known advantages by resort to the added step of uniting the two separate photographic records, sound and picture, by printing them on a single film.

The practice of printing separate photographs from separately developed negatives upon a single positive film has long been known to photographers. Standard photographic dictionaries, published here and abroad between 1894 and 1912, describe the procedure for "combination printing" of a single positive picture from separately developed negatives.[1] The procedure is shown to have been followed in the laboratories of the Eastman Kodak Com-

[1]Wilson's Cyclopaedic Photography, published by Edward L. Wilson, New York, 1894; Encyclopaedic Dictionary of Photography, by Woodbury, published by Scovill & Adams Co., New York, 1896; Konig, published by Dawbarn & Ward, Ltd., London, 1906; Cassell's Cyclopaedia of Photography, by Jones, published by Cassell & Company, Ltd., 1912. (The references, with

pany for many years prior to April, 1921, the date claimed for the present patent, and before that date the Company had made special materials for use in combination printing.

The practice was also well known in the motion picture industry. In 1908 the American Mutoscope & Biograph Company made and released in the United States a motion picture, *The Music Master*. This picture was prepared by separately photographing two scenes. From the separately developed negatives a positive was printed, showing the two pictures on the same strip of film, from which the motion picture was reproduced. The British Downing Patent, No. 6,727, of 1913, discloses methods and apparatus for producing motion pictures, accompanied by printed words used by the actors, the two records being printed on a single positive film from separately exposed and developed negatives. The Messter Patent, U. S. No. 1,286,383, of 1918, and the British Patent, No. 21,467, issued to Rossi in 1909, each discloses a method of printing two separately exposed picture records on a single film. The Craig Patent, already mentioned, calls for separate exposure and development of sound and picture negatives, simultaneously recorded, and their printing on opposite sides of a single film. The Greensfelder Patent, U. S. No. 1,254,684, of 1918, discloses a method for printing, from separately exposed and developed negatives, a sound record and a picture record on the same side of a single positive film. The function of the sound record differed radically from that contemplated by respondent's patent, but this is immaterial so far as its printing is concerned, in which the Greensfelder patent does not substantially differ from that in suit. While these patents did not specifically mention the separate development of the negatives of the two records, it appears that they were photographed separately upon separate negatives, and the record shows that at their dates the state of the art was such as to require separate development of the two negatives. The practice and advantage of separate development are also shown to be well known. This and other evidence in the record abundantly supports the finding of the trial court court that as early as 1908 it was common practice in the motion picture

---

quoted portions of the texts, were made a part of the record by stipulation.) The publication last mentioned states that "combination printing had its origin in 1855, when Berwick and Annan, of Glasgow, exhibited a picture printed from two different negatives—a figure and a landscape;" numerous later examples of the practice are given.

industry to print, on standard positive film, composite pictures from separately developed negatives.

The simultaneous photographing of sound and picture records was not novel, separate development of the negatives was well known, the advantage of uniting the two records, sound and picture, on a single film was well known, and the method of uniting two photographic picture records by printing them from the separate negatives was well known.

This use of an old method to produce an old result was not invention. See *Electric Cable Co.* v. *Edison Company*, 292 U. S. 69, 80, and cases cited. Even if it be assumed that the Greensfelder patent did not anticipate that of respondent, because the sound record there mentioned was designed directly to operate musical instruments, rather than a loudspeaker, all that was novel in the claimed method was its application in the production of a combined sound and picture record, instead of a combination of two picture records. To claim the merit of invention the patented process must itself possess novelty. The application of an old process to a new and closely analogous subject matter, plainly indicated by the prior art as an appropriate subject of the process, is not invention. *Brown* v. *Piper*, 91 U. S. 37, 41; see *Pennsylvania Railroad Co.* v. *Locomotive Truck Co.*, 110 U. S. 490, 494; *Dreyfus* v. *Searle*, 124 U. S. 60, 64; *Concrete Appliances Co.* v. *Gomery*, 269 U. S. 177, 184, 185. However wide the differences between the procedures and results of sound reproduction from film on the one hand, and picture reproduction on the other, the method of producing photographic sound and picture records and uniting them on the positive film are identical, for both sound and picture records, from the time of exposure of the negatives until the single film is completed. With knowledge of the well understood advantages of the union of the two records on a single film, it required no more than the expected skill of the art of photography to use an old method of printing photographically the two negatives upon a single positive.

Against this conclusion respondents throw the weight of voluminous evidence, showing the practical utility and widespread use of the patented process, which prevailed with the court below as sufficient to establish invention. It is said that, however simple and obvious the method may appear to be now that it is in suc-

cessful use, no one before the patentees had used it for producing the union of a sound and a picture record. Respondents also allege that the positive film produced by its method is more useful than any it had been possible to produce by other methods, and that it has found all but universal acceptance. These considerations, it is urged, should turn the scale in favor of invention.

Laying aside the objection that it is only when invention is in doubt that advance in the art may be thrown in the scale, *DeForest Radio Company* v. *General Electric Company*, 283 U. S. 664, 685; *Smith* v. *Dental Vulcanite Co.*, 93 U. S. 486, 495, 496, we think the evidence of utility and prompt acceptance of the patented method, in the circumstances of this case, adds little weight to the claim of invention. The greater utility of respondent's film over those effecting the union of the two records by other methods does not establish the novelty of the method. Evidence of great utility of a method or device, it is true, may in some circumstances be accepted as evidence of invention. Where the method or device satisfies an old and recognized want, invention is to be inferred, rather than the exercise of mechanical skill. For mere skill of the art would normally have been called into action by the generally known want. See *Loom Co.* v. *Higgins*, 105 U. S. 580, 591; *Krementz* v. *S. Cottle Co.*, 148 U. S. 556, 560; *Hobbs* v. *Beach*, 180 U. S. 383, 392; *Carnegie Steel Co.* v. *Cambria Iron Co.*, 185 U. S. 403, 429, 430; *Expanded Metal Co.* v. *Bradford*, 214 U. S. 366, 381.

But the state of the motion picture art, as it is disclosed by the present record, indicates that there was no generally recognized demand for any type of film record, for the reproduction of sound to accompany motion pictures, until after the present patent was applied for. See *Hollister* v. *Benedict & Burnham Mfg. Co.*, 113 U. S. 59, 73. Compare *McClain* v. *Ortmayer*, 141 U. S. 419, 428; *Grant* v. *Walter*, 148 U. S. 547, 556.

Before 1926 motion pictures were silent and there was no convincing evidence that the public would prefer the sound picture. In that year Warner Brothers exhibited sound pictures produced by the disc system, provided by the Western Electric Company. At that time the Company had for some years been experimenting with both film and disc systems for recording sound, and it had electrically recorded disc phonographic records which were in commercial use. The addition of sound on disc to motion pictures

involved merely the attachment of the phonographic type of turntable to the ordinary motion picture projector, without any extensive modification of the projector or the film printing machines then in use, as was later necessary in order to employ the film method. Moreover, as has already been indicated, skilfully devised mechanisms were required for successfully recording and reproducing sound by the film method, a problem distinct from any method of uniting the sound and picture records upon a single film.

Until these appliances were perfected there could be no pressing and generally recognized demand for the sound film. It was not until after the public interest in sound pictures was disclosed, in the summer of 1926, that the mechanism for recording and reproducing sound by the film method was carried to a state of perfection which would warrant its production in commercial form. The light valve was produced in commercial form in December, 1926, and the first installations were in 1927. A rival system, of the Fox Case Company, for recording and reproducing sound by film, was not not brought to completion until after 1926. Other problems engaging the attention of experimenters in this field were the necessary improvement of the photo-electric cell, the devising of suitable emulsion for sound negatives, of apparatus for "mixing" the sound to be recorded, and the mechanical perfection of the apparatus for reproducing sound from film. See Nos. 255, 256, *Altoona Publix Theatres, Inc., et al.* v. *American Tri-Ergon Holding A. G.*, decided this day.

Thus there is no basis shown by this record for the contention that advance in this phase of the motion picture industry was awaiting the development of the combined sound and picture record upon a single positive film. On the contrary, the inference seems plain that the advance awaited the public acceptance of the sound motion picture; that when the public demand became manifest it was still necessary to develop suitable mechanisms, not embraced in the patent, for the reproduction of sound from film. There had long been, ready at hand, knowledge in the photographic art which would enable one skilled in the art to produce the film suitable for use in the new apparatus. Indeed, at some time before 1924, Wente, engaged in research on sound film apparatus for the Western Electric Company, without any knowledge of the work of the patentees of the present patent, had prepared the com-

bined sound and picture positive film by printing it from separate negatives, separately exposed and developed.

The bare fact that several inventors, in the early stages of sound reproduction, working independently, of whose knowledge and skill in the photographic art we know little or nothing, failed to resort to a method, well known to that art, for printing a combination film for which there was then no generally recognized need, does not give rise to the inference of invention.

The court below also rested its decision on the ground that the petitioner is estopped to deny the validity of the patent by the application of Wente, April 8, 1924, who was in the employ of the Western Electric Company, for a patent for an improvement in recording and printing the sound record film, which contained claims broad enough to include the method claimed by respondent. These claims were rejected by the Patent Office as reading on the British Patent 178,442 of the present patentees, and the Greensfelder patent, already mentioned. However inconsistent this early attempt to procure a patent may be with petitioner's present contention of its invalidity for want of invention, this Court has long recognized that such inconsistency affords no basis for an estoppel, nor precludes the court from relieving the alleged infringer and the public from the asserted monopoly when there is no invention. *Haughey* v. *Lee*, 151 U. S. 282, 285.

Reversed.

Mr. Justice BRANDEIS took no part in the consideration or decision of this case.

A true copy.

Test:

Clerk, Supreme Court, U. S.